BELTSERVICE CORPORATION

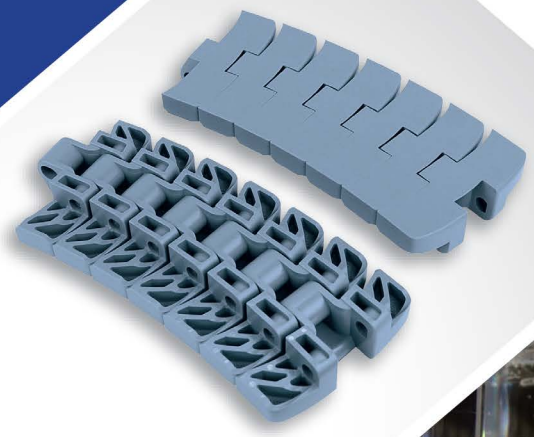

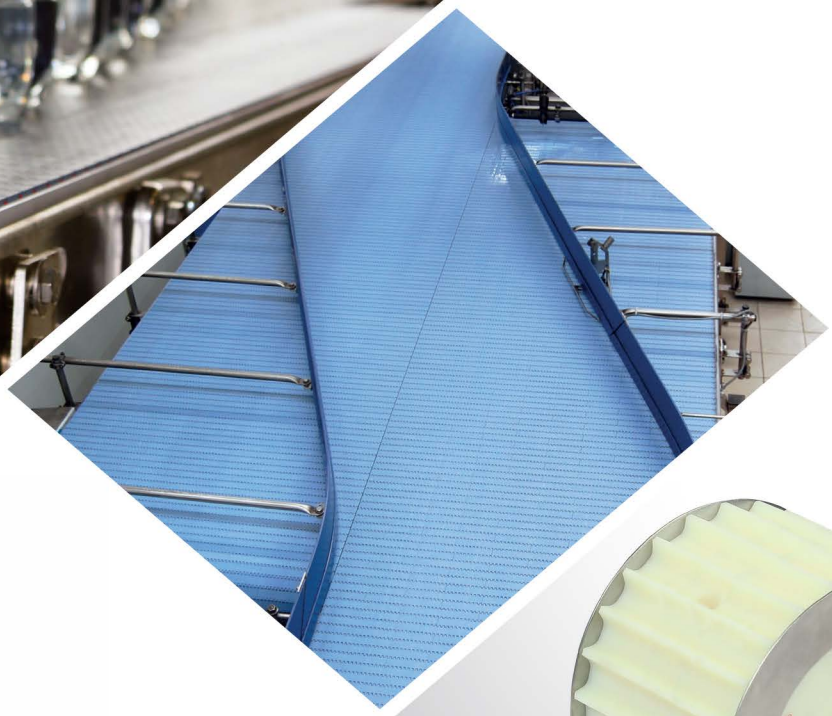

Movex®

www.movexii.com

Movex®

Moving through innovation

Your business is stepping into the future.

Movex designs and manufacturers high-quality conveyor and conveying products for the food, beverage, packaging, and automotive industries, and related automation processes.

Movex meets your needs for both standard and custom products in a dynamic and responsive manner, providing the best in specialized-design and after-sale support capabilities.

Innovation and unsurpassed service-levels are the goals of a highly-qualified, global sales and technical team with the objective of presenting Movex as a supplier-of-excellence to companies of all sizes. Through a distribution-channel that spans the globe, Movex offers a continually evolving product-Line, driven by ongoing technical innovation and the resolve to help move your business forward. Always.

Movex S.p.A. Headquarter
Viale Industria, 22 - 24060 Castelli Calepio (BG) - Italy - P +39 035 8359711 | F +39 035 4420873

The Movex® World.

Movex GmbH
Alfred-Nobel-Strasse, 4
68519 Viernheim - Germany
P +49 (0) 6204 9375-0
F +49 (0) 6204 9375-55

Movex (Shanghai) Co. Ltd.
Room 1009, No.1728, Huang xing Road,
Shanghai, China 200433
P +86 21 65037822
F +86 21 65032692

Movex Brasil Ltda
Rua Augusto Gutierres, 229
Eden - CEP 18103-011
Sorocaba - SP - Brasil
P +55 15 3141-2550
info-brasil@movexii.com

Movex USA Inc.
78 Corporate Way
Evington, Virginia 24550
P +1.(434) 616-2590
Toll Free +1 800 461 5179
info-USA@movexii.com

Quality and Passion at your service.

Sales Office

Movex SA de CV
Av. Aviacion 6503 Bodega B5 Ciudad Granja - Zapopan, Jalisco 45010 - Mexico P (33) 3110-0808 | M (33) 1845-8187

Movex Canada Ltd.
P +1.519.833.7500 | F +1.519.833.7510

Movex France
P +33 06 06 81 99 76 | F +33 09 70 62 50 98

Movex AG
info@movexindia.com
www.movexindia.com

Movex Nederland
P +31 (0) 630 99 48 50

Movex UK Ltd.
P +44 7720 678442

Summary

Steel chains Pag 7

Plastic chains Pag 29

Chain sprockets Pag 77

Chain idler wheels Pag 97

Tab & Bevel corner tracks Pag 101

Modular belts Pag 105

Belt sprockets Pag 177

Extruded profiles Pag 197

Return components Pag 247

Conveyor components Pag 259

Conveyor support components Pag 305

Bearing supports Pag 319

Leveling pads Pag 343

Sprockets position manual Pag 365

Materials Pag 379

7

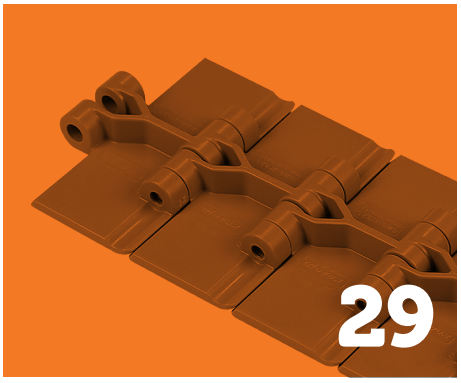
29

77

97

101

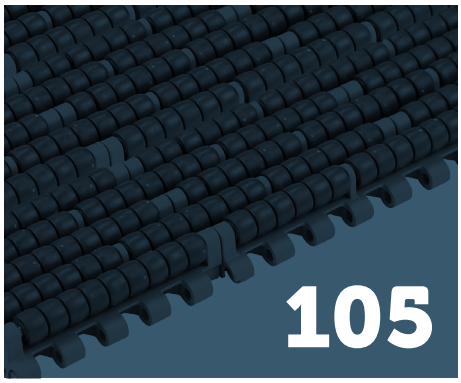
105

177

197

247

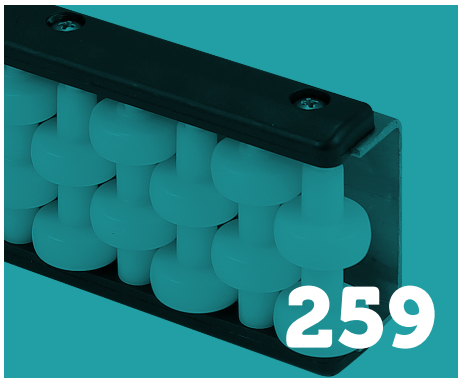
259

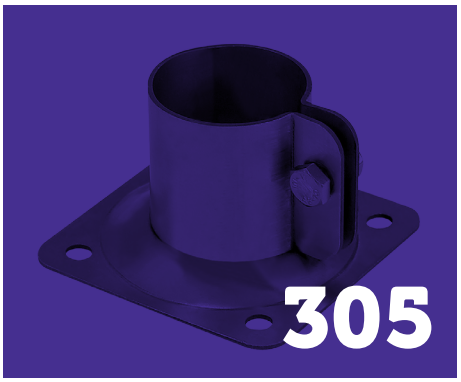
305

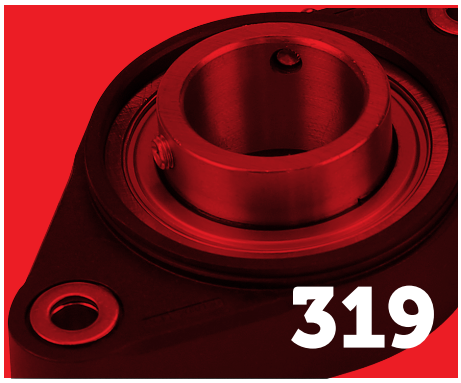
319

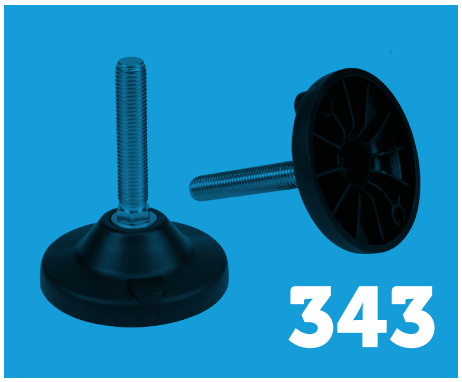
343

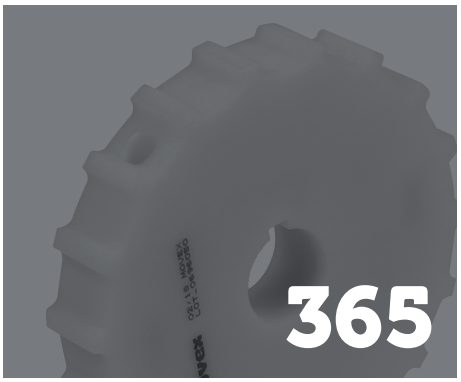
365

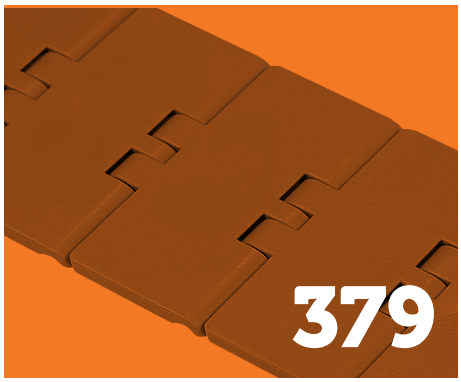
379

Movex®

movexii.com

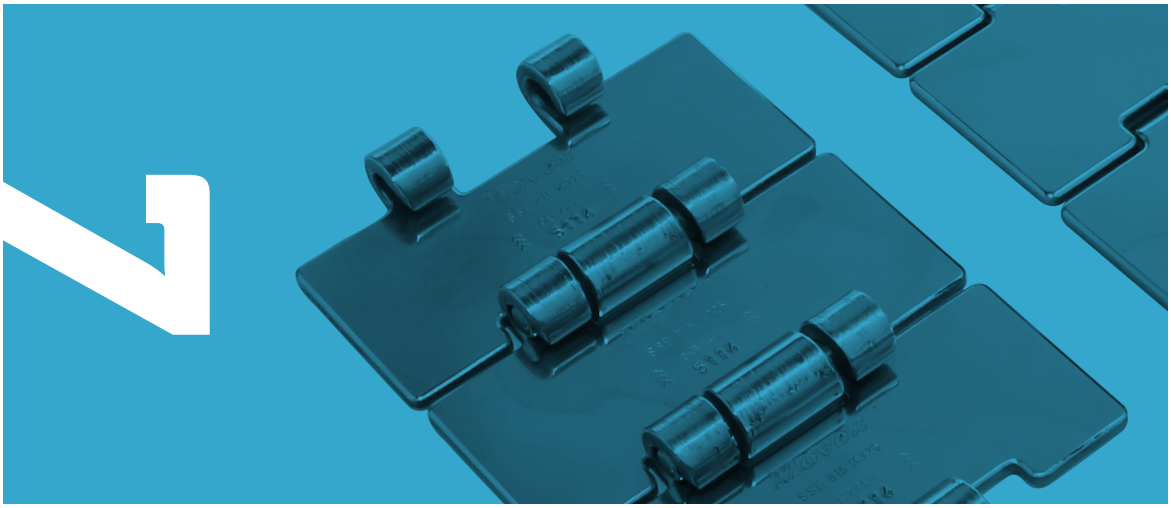

Steel chains

812/815
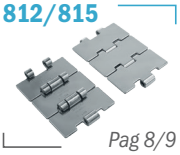
Pag 8/9

802/805
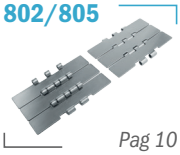
Pag 10

8157
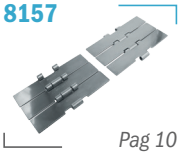
Pag 10

512
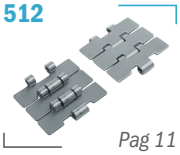
Pag 11

881 M
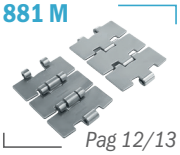
Pag 12/13

881 TAB

Pag 14

881 B
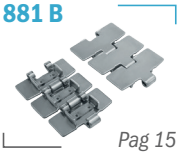
Pag 15

8811 TAB

Pag 16

8811 B
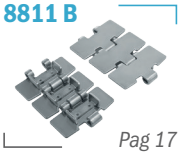
Pag 17

8857 M
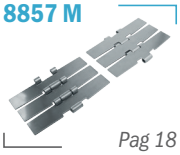
Pag 18

815 MINI

Pag 19

812 GT/815 GT

Pag 20

815 TAB GT
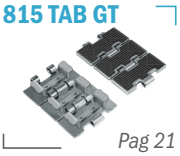
Pag 21

802 GT/ 805 GT
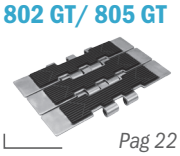
Pag 22

8157 GT
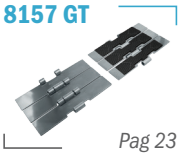
Pag 23

8811 TAB GT

Pag 24

881 M GT
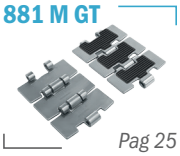
Pag 25

8857 M GT
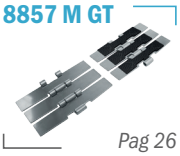
Pag 26

1874 TAB

Pag 27

815 *Straight running chain*

Pins: Martensitic 1.4057 | **Backflex radius min.:** 5.91 in/150 mm

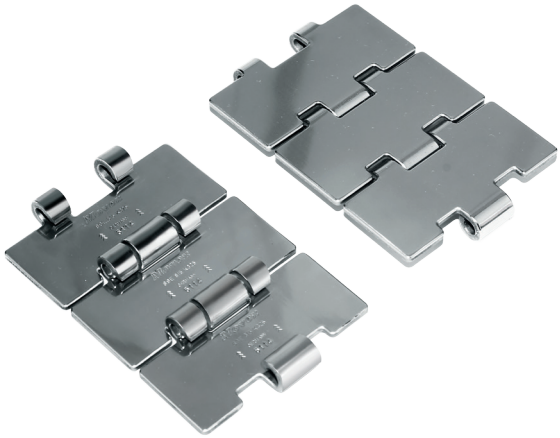

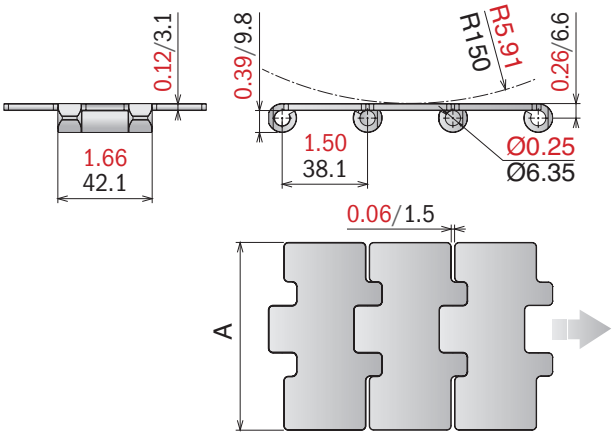

10 feet
3.048 m
80 links

pg. 78-79-91/98

pg. 388->391

Article-Nr.	Ref.	A (Plate Width) in-mm	Weight lbs/ft-kg/m	Surface finish in^{-5}-µm	Surface Flatness in-mm	Polished Hinge eyes	Max working load (lbs/N)	Plate Thickness in-mm
SSM Max Speed - Hardened pins								
10010302	SSM 815 K325	3.25/82,5	1.71/2,55	0.008/0,2	0.003/0,08	YES	1350/6000	0.12/3,1
10010303	SSM 815 K330	3.30/83,8	1.74/2,59	0.008/0,2	0.003/0,08	YES		

Max Speed High Performance

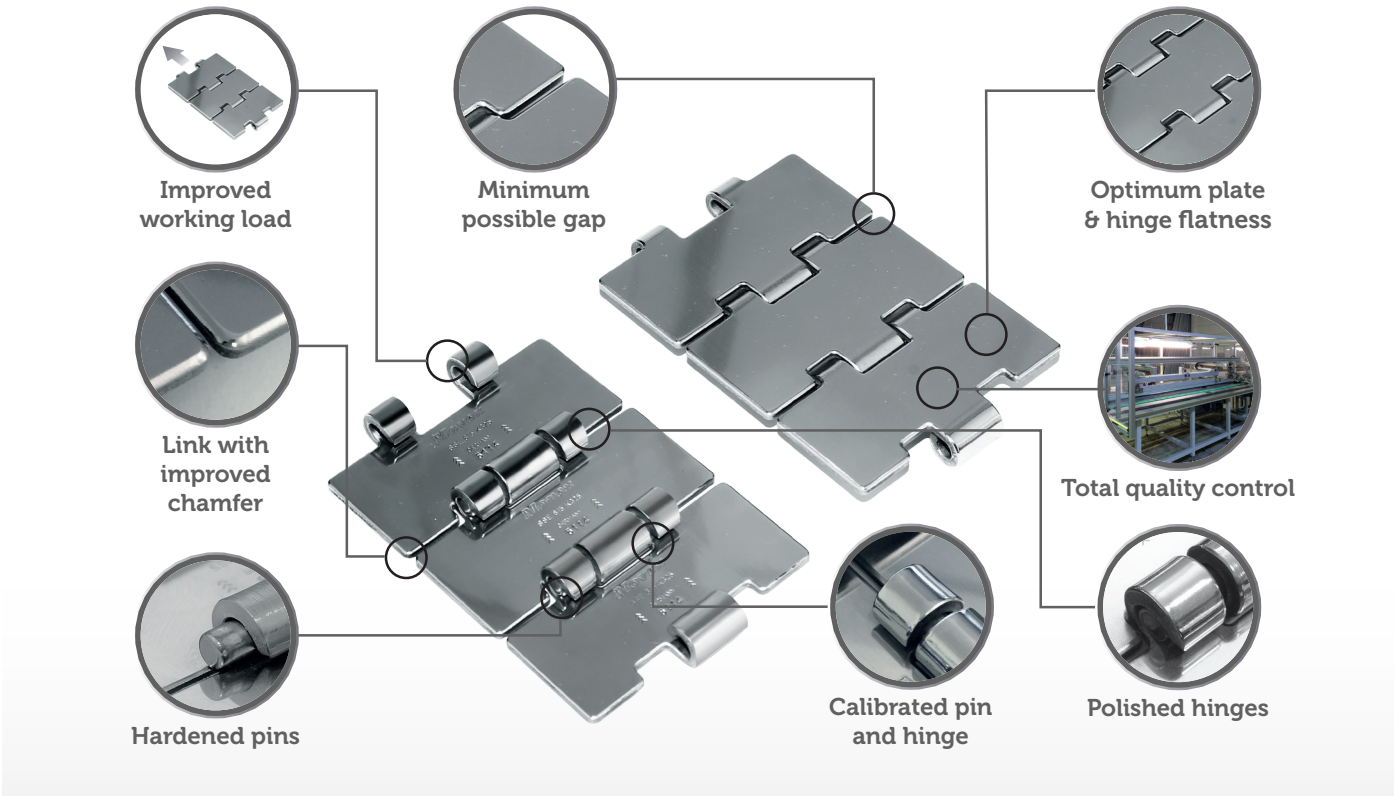

812/815

Straight running chain

Pins: Martensitic 1.4057 | **Backflex radius min.:** 5.91 in/150 mm

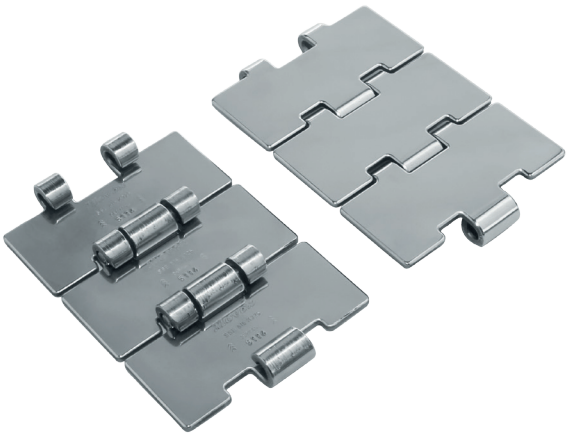

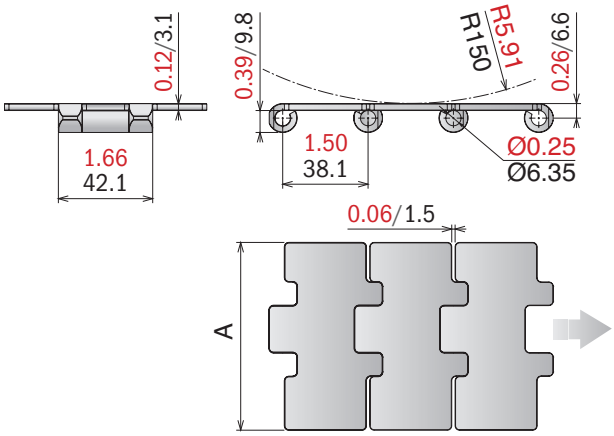

10 feet
3.048 m
80 links

pg. 78-79-91/98

pg. 388->391

Article-Nr.	Ref.	A (Plate Width) in-mm	Weight lbs/ft-kg/m	Surface finish in^{-5}-µm	Surface Flatness in-mm	Polished Hinge eyes	Max working load (lbs/N)	Plate Thickness in-mm
				SS *Ferritic Stainless Steel (1.4016)*				
10010216	SS 812 K300	3.00/76,2	1.67/2,50	0.02/0,5	0.006/0,15	NO	1215/5400	0.12/3,1
10010202	SS 812 K325	3.25/82,5	1.71/2,55	0.02/0,5	0.006/0,15	NO		
10010203	SS 812 K330	3.30/83,8	1.74/2,59	0.02/0,5	0.006/0,15	NO		
10010204	SS 812 K350	3.50/88,9	1.80/2,69	0.02/0,5	0.006/0,15	NO		
10010214	SS 812 K400	4.00/101,6	2.01/3,00	0.02/0,5	0.006/0,15	NO		
10010205	SS 812 K450	4.50/114,3	2.18/3,25	0.02/0,5	0.008/0,20	NO		
10010206	SS 812 K600	6.00/152,4	2.79/4,15	0.02/0,5	0.012/0,30	NO		
10010207	SS 812 K750	7.50/190,5	3.39/5,05	0.02/0,5	0.012/0,30	NO		
				SSE *Specially treated Ferritic Stainless Steel (1.4589)* - **Hardened pins**				
10010102	SSE 815 K325	3.25/82,5	1.71/2,55	0.01/0,3	0.004/0,10	YES	1350/6000	0.12/3,1
10010103	SSE 815 K330	3.30/83,8	1.74/2,59	0.01/0,3	0.004/0,10	YES		
10010104	SSE 815 K350	3.50/88,9	1.80/2,69	0.01/0,3	0.006/0,15	NO		
10010114	SSE 815 K400	4.00/101,6	2.01/3,00	0.01/0,3	0.006/0,15	NO		
10010105	SSE 815 K450	4.50/114,3	2.18/3,25	0.01/0,3	0.008/0,20	NO		
10010106	SSE 815 K600	6.00/152,4	2.79/4,15	0.01/0,3	0.012/0,30	NO		
10010107	SSE 815 K750	7.50/190,5	3.39/5,05	0.01/0,3	0.012/0,30	NO		
				SSA *Austenitic Stainless Steel (AISI 304) - Austenitic pin*				
10010402	SSA 815 K325	3.25/82,5	1.71/2,55	0.02/0,5	0.006/0,15	NO	1190/5300	0.12/3,1
10010403	SSA 815 K330	3.30/83,8	1.74/2,59	0.02/0,5	0.006/0,15	NO		
10010404	SSA 815 K350	3.50/88,9	1.80/2,69	0.02/0,5	0.006/0,15	NO		
10010405	SSA 815 K450	4.50/114,3	2.18/3,25	0.02/0,5	0.008/0,20	NO		
10010406	SSA 815 K600	6.00/152,4	2.79/4,15	0.02/0,5	0.012/0,30	NO		
10010407	SSA 815 K750	7.50/190,5	3.39/5,05	0.02/0,5	0.012/0,30	NO		

802/805

Straight running chain

Pins: Martensitic 1.4057 | **Backflex radius min.:** 5.91 in/150 mm

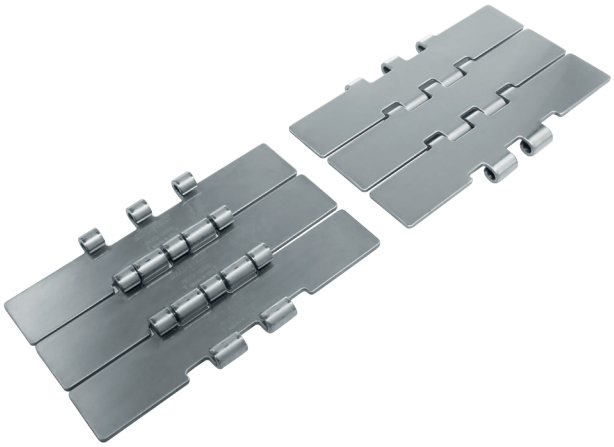

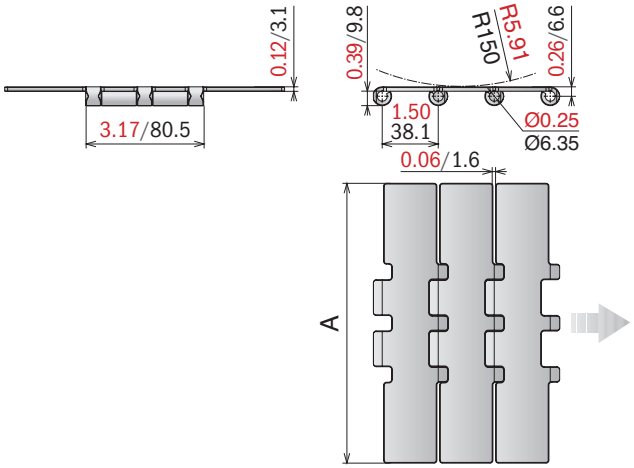

10 feet
3.048 m
80 links
pg. 82-92-99
pg. 388->391

Article-Nr.	Ref.	A (Plate Width) in-mm	Weight lbs/ft-kg/m	Surface finish in-^{5}-µm	Max working load (lbs/N)	Plate Thickness in-mm
SS *Ferritic Stainless Steel (1.4016)*						
10030207	**SS 802 K750**	7.50/190,5	3.90/5,80	0.02/0,6	1575/7000	0.12/3,1
SSE *Specially treated Ferritic Stainless Steel (1.4589)* **- Hardened pins**						
10030107	**SSE 805 K750**	7.50/190,5	3.90/5,80	0.01/0,3	2023/9000	0.12/3,1
SSA *Austenitic Stainless Steel (AISI 304) - Austenitic pin*						
10030407	**SSA 805 K750**	7.50/190,5	3.90/5,80	0.02/0,6	1955/8700	0.12/3,1

8157

Straight running chain

Pins: Martensitic 1.4057 | **Backflex radius min.:** 5.91 in/150 mm

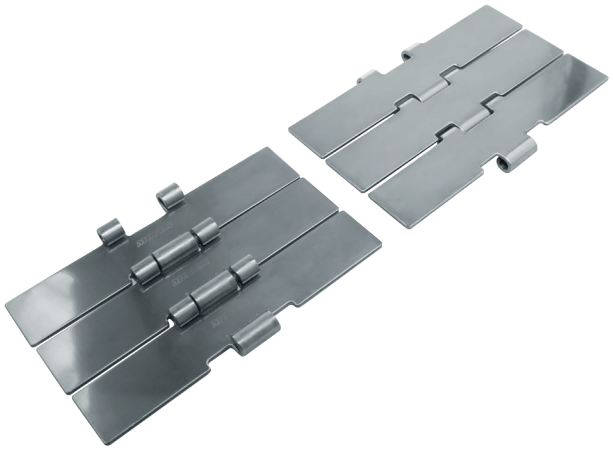

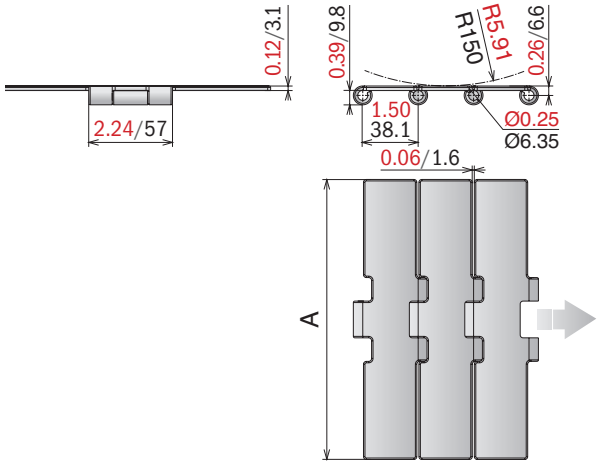

10 feet
3.048 m
80 links
pg. 83-91/100
pg. 388->391

Article-Nr.	Ref.	A (Plate Width) in-mm	Weight lbs/ft-kg/m	Surface finish in-^{5}-µm	Max working load (lbs/N)	Plate Thickness in-mm
SSE *Specially treated Ferritic Stainless Steel (1.4589)* **- Hardened pins**						
10050107	**SSE 8157 K750**	7.50/190,5	3.76/5,60	0.01/0,3	1575/7000	0.12/3,1

512 *Straight running chain*

Pins: Martensitic 1.4057 | **Backflex radius min.:** 3.94 in/100 mm

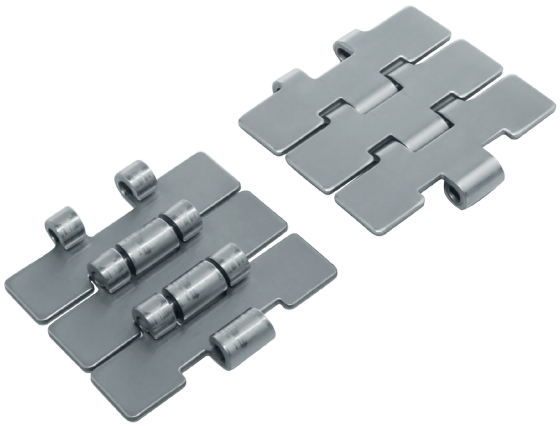

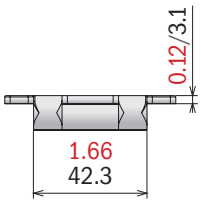

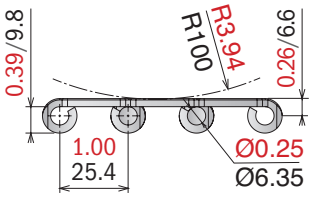

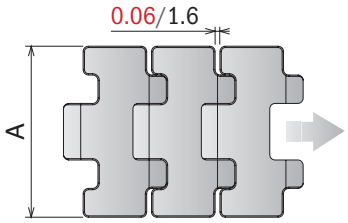

10 feet
3.048 m
120 links

pg. 90

pg. 388->391

Article-Nr.	Ref.	A (Plate Width) in-mm	Weight lbs/ft-kg/m	Surface finish in-5-µm	Max working load (lbs/N)	Plate Thickness in-mm
SSE *Specially treated Ferritic Stainless Steel (1.4589)* **- Hardened pins**						
10070100	SSE 512 K217	2.17/55,1	1.55/2,30	0.01/0,3	1125/5000	0.12/3,1
10070101	SSE 512 K236	2.36/60,0	1.61/2,40	0.01/0,3		
10070108	SSE 512 K250	2.50/63,5	1.65/2,45	0.01/0,3		
10070109	SSE 512 K283	2.83/71,9	1.78/2,65	0.01/0,3		
10070102	SSE 512 K325	3.25/82,5	1.94/2,90	0.01/0,3		
10070104	SSE 512 K350	3.50/88,9	2.01/3,00	0.01/0,3		
10070114	SSE 512 K400	4.00/101,6	2.21/3,30	0.01/0,3		
SSA *Austenitic Stainless Steel (AISI 304) - Austenitic pin*						
10070400	SSA 512 K217	2.17/55,1	1.55/2,30	0.01/0,3	1010/4500	0.12/3,1
10070401	SSA 512 K236	2.36/59,9	1.61/2,40	0.01/0,3		
10070408	SSA 512 K250	2.50/63,5	1.65/2,45	0.01/0,3		
10070409	SSA 512 K283	2.83/71,9	1.78/2,65	0.01/0,3		
10070414	SSA 512 K400	4.00/101,6	2.21/3,30	0.01/0,3		

881 M

Sideflexing chain

Pins: Martensitic 1.4057 | **Backflex radius min.:** 3.94 in/100 mm

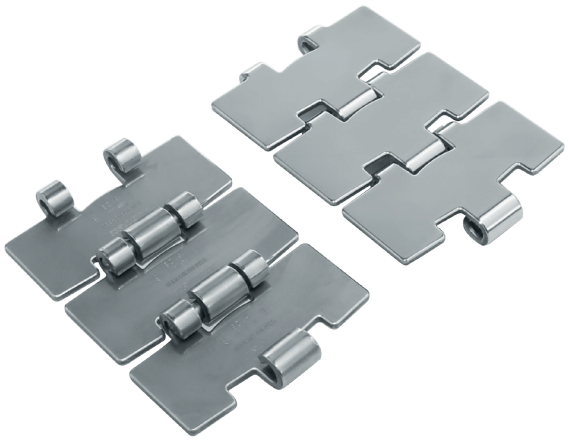

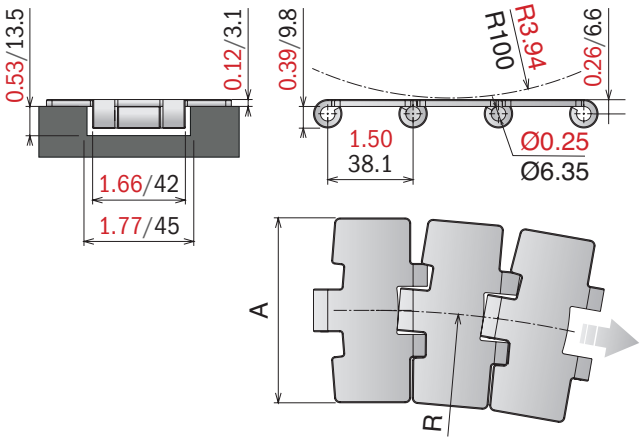

Magnetic System

10 feet 3.048 m | 80 links | pg. 80-81/98 | pg. 388->391

Article-Nr.	Ref.	A (Plate Width) in-mm	R in-mm	Weight lbs/ft-kg/m	Surface finish in^{5}-µm	Surface Flatness in-mm	Polished Hinge eyes	Max working load (lbs/N)	Plate Thickness in-mm
SSM Max Speed - Hardened pins									
10080302	SSM 881 M0 K325	3.25/82,5	19.68/500	1.71/2,55	0.008/0,2	0.003/0,08	YES	1350/6000	0.12/3,1
10080303	SSM 881 M0 K330	3.30/83,8	19.68/500	1.74/2,59	0.008/0,2	0.003/0,08	YES		

Max Speed High Performance

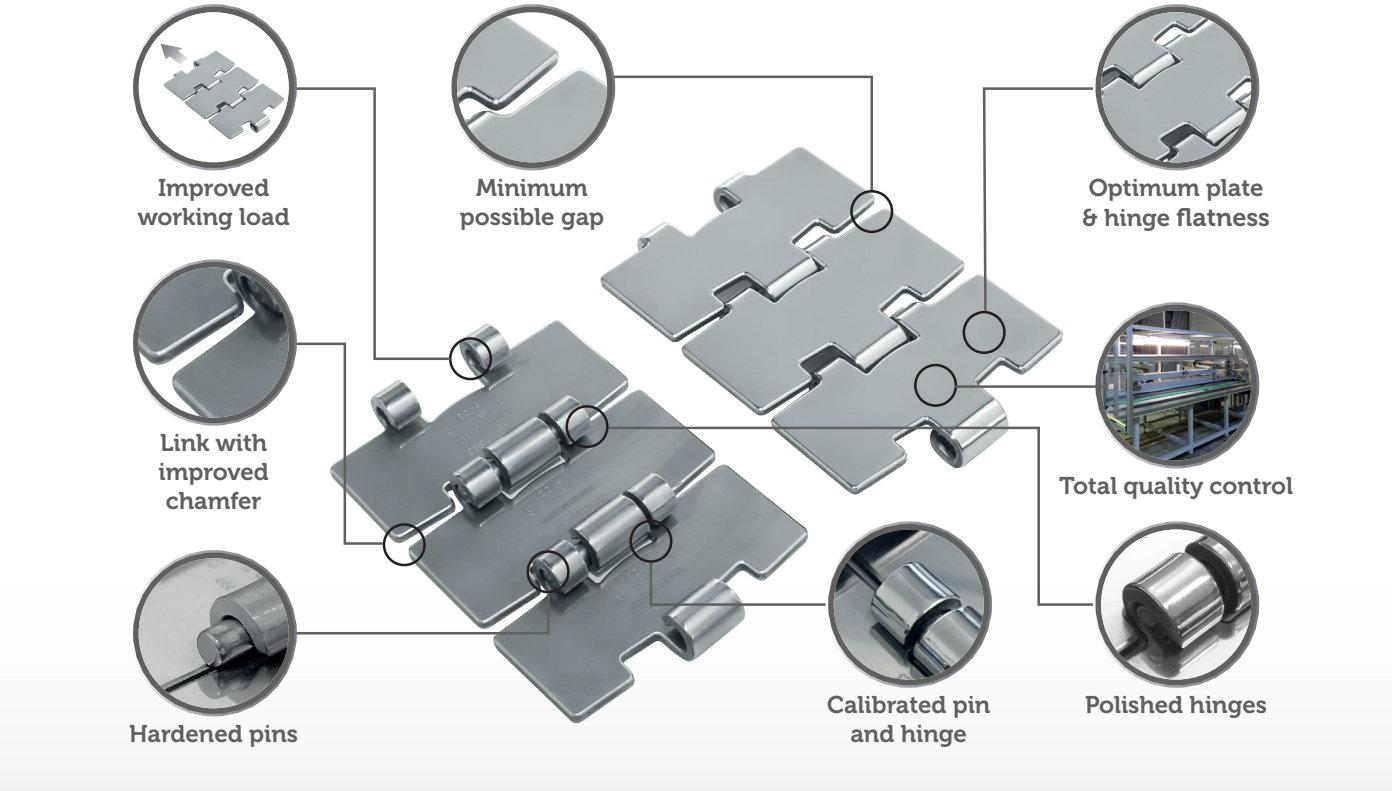

881 M

Sideflexing chain

Pins: Martensitic 1.4057 | **Backflex radius min.:** 3.94 in/100 mm

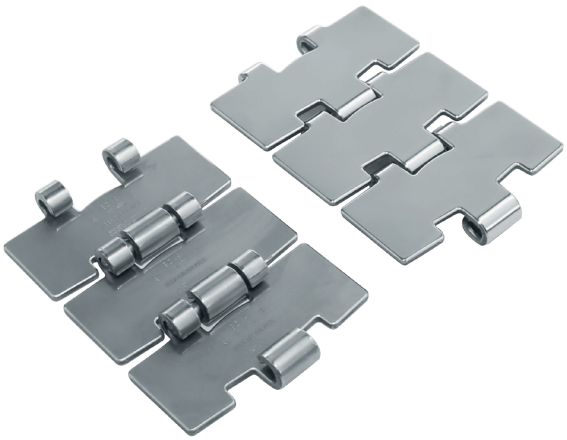

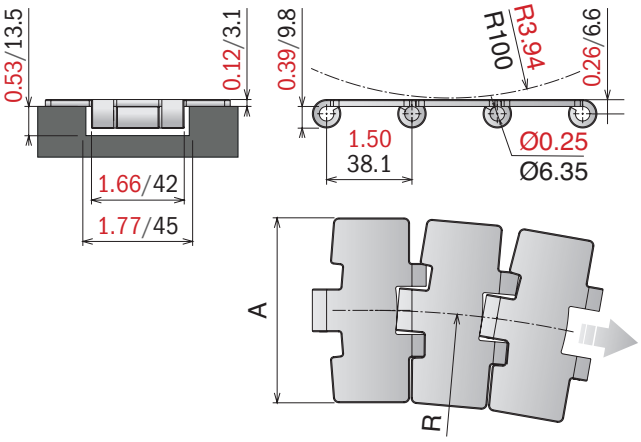

Magnetic System

10 feet 3.048 m | 80 links | pg. 80-81/98 | pg. 388->391

Article-Nr.	Ref.	A (Plate Width) in-mm	R in-mm	Weight kg/m	Surface finish in-5-µm	Surface Flatness in-mm	Polished Hinge eyes	Max working load (lbs/N)	Plate Thickness in-mm
SS *Ferritic Stainless Steel (1.4016)*									
10080202	SS 881 M0 K325	3.25/82,5	19.68/500	1.71/2,55	0.02/0,5	0.006/0,15	YES	1215/5400	0.12/3,1
10080203	SS 881 M0 K330	3.30/83,8	19.68/500	1.74/2,59	0.02/0,5	0.006/0,15	YES		
10080205	SS 881 M0 K450	4.50/114,3	19.68/500	2.08/3,10	0.02/0,5	0.008/0,20	YES		
10080207	SS 881 M0 K750	7.50/190,5	19.68/500	3.26/4,85	0.02/0,5	0.012/0,30	YES		
SSE *Specially treated Ferritic Stainless Steel (1.4589)* **- Hardened pins**									
10080102	SSE 881 M0 K325	3.25/82,5	19.68/500	1.71/2,55	0.01/0,3	0.004/0,10	YES	1350/6000	0.12/3,1
10080103	SSE 881 M0 K330	3.30/83,8	19.68/500	1.74/2,59	0.01/0,3	0.004/0,10	YES		
10080105	SSE 881 M0 K450	4.50/114,3	19.68/500	2.08/3,10	0.01/0,3	0.008/0,20	YES		
10080107	SSE 881 M0 K750	7.50/190,5	19.68/500	3.26/4,85	0.01/0,3	0.012/0,30	YES		

881 TAB

Sideflexing chain

Pins: Martensitic 1.4057 | **Backflex radius min.:** 2.95 in/75 mm

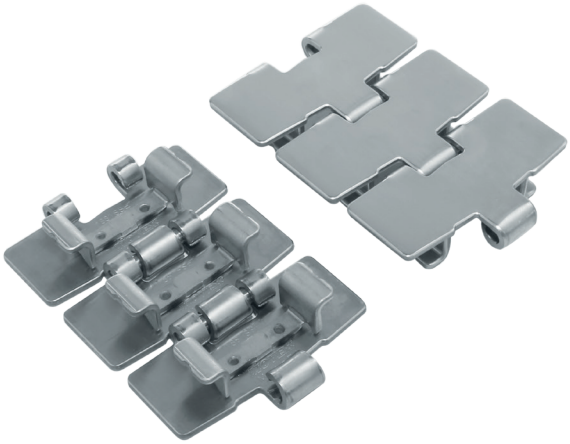

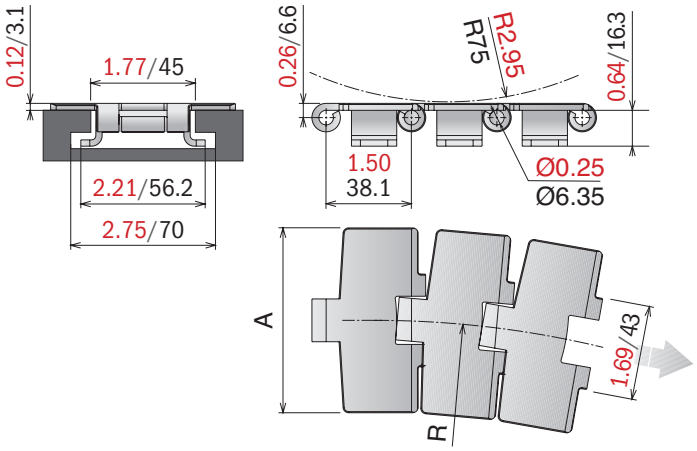

Tab System

10 feet 3.048 m | 80 links | pg. 80-81/100 | pg. 102/104 | pg. 388->391

Article-Nr.	Ref.	A (Plate Width) in-mm	R in-mm	Weight lbs/ft-kg/m	Surface Flatness in-mm	Max working load (lbs/N)	Plate Thickness in-mm
SS *Ferritic Stainless Steel (1.4016)*							
10100202	SS 881 TAB K325	3.25/82,5	18.00/457	2.01/3,00	0.01/0,3	1215/5400	0.12/3,1
SSE *Specially treated Ferritic Stainless Steel (1.4589)* **- Hardened pins**							
10100102	SSE 881 TAB K325	3.25/82,5	18.00/457	2.01/3,00	0.01/0,3	1350/6000	0.12/3,1
10100105	SSE 881 TAB K450	4.50/114,3	19.68/500	2.48/3,69	0.01/0,3		
10100107	SSE 881 TAB K750	7.50/190,5	19.68/500	3.69/5,50	0.01/0,3		
SSA *Austenitic Stainless Steel (AISI 304) - Austenitic pin*							
10100402	SSA 881 TAB K325	3.25/82,5	18.00/457	2.01/3,00	0.01/0,3	1010/4500	0.12/3,1
10100405	SSA 881 TAB K450	4.50/114,3	19.68/500	2.48/3,69	0.01/0,3		
10100407	SSA 881 TAB K750	7.50/190,5	19.68/500	3.69/5,50	0.01/0,3		

881 B

Sideflexing chain

Pins: Martensitic 1.4057 | **Backflex radius min.:** 2.95 in/75 mm

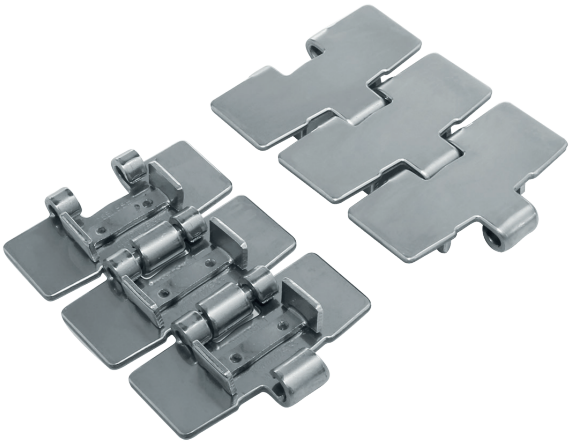

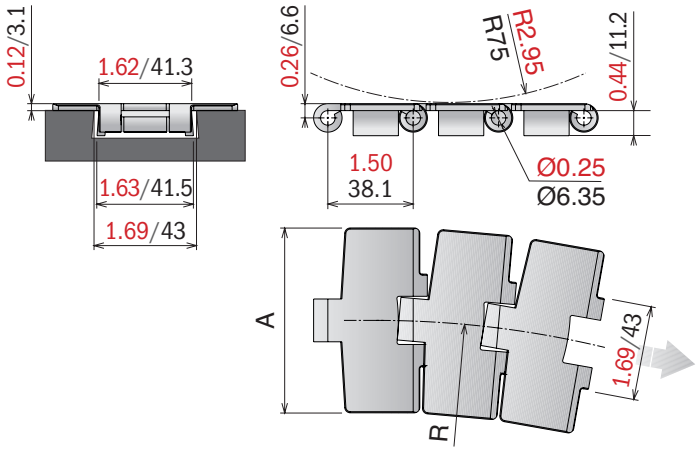

Bevel System

10 feet 3.048 m | 80 links | pg. 80-81/98 | pg. 103 | pg. 388->391

Article-Nr.	Ref.	A (Plate Width) in-mm	R in-mm	Weight lbs/ft-kg/m	Surface Flatness in-mm	Max working load (lbs/N)	Plate Thickness in-mm
SSE *Specially treated Ferritic Stainless Steel (1.4589)* **- Hardened pins**							
10120102	SSE 881 K325	3.25/82,5	18.00/457	1.98/2,95	0.01/0,3	1350/6000	0.12/3,1
10120104	SSE 881 K350	3.50/88,9	19.68/500	2.01/3,00	0.01/0,3		
10120105	SSE 881 K450	4.50/114,3	19.68/500	2.45/3,65	0.01/0,3		
10120107	SSE 881 K750	7.50/190,5	19.68/500	3.66/5,45	0.01/0,3		
SSA *Austenitic Stainless Steel (AISI 304) - Austenitic pin*							
10120402	SSA 881 K325	3.25/82,5	18.00/457	1.98/2,95	0.01/0,3	1010/4500	0.12/3,1
10120405	SSA 881 K450	4.50/114,3	19.68/500	2.45/3,65	0.01/0,3		
10120407	SSA 881 K750	7.50/190,5	19.68/500	3.66/5,45	0.01/0,3		

8811 TAB

Sideflexing chain

Pins: Martensitic 1.4057 | **Backflex radius min.:** 3.94 in/100 mm

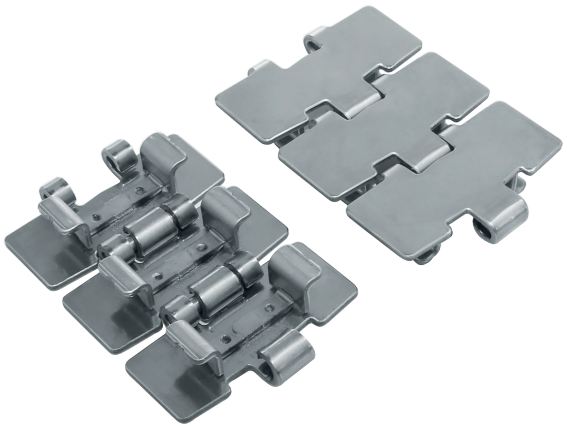

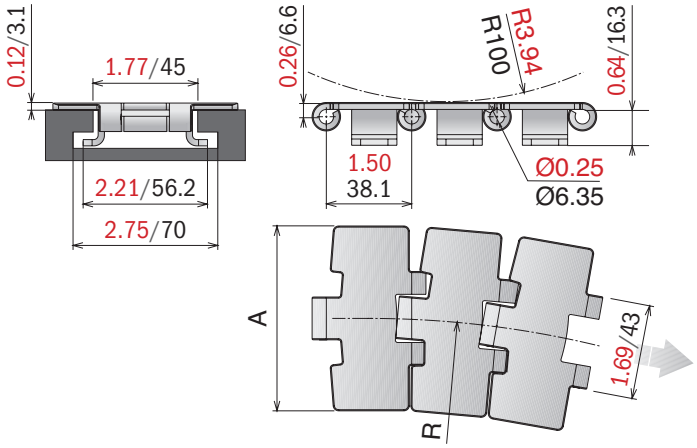

Tab System

10 feet 3.048 m | 80 links | pg. 80-81/100 | pg. 102/104 | pg. 388->391

Article-Nr.	Ref.	A (Plate Width) in-mm	R in-mm	Weight lbs/ft-kg/m	Surface Flatness in-mm	Max working load (lbs/N)	Plate Thickness in-mm
SS *Ferritic Stainless Steel (1.4016)*							
10140202	SS 8811 TAB K325	3.25/82,5	19.68/500	1.98/2,95	0.01/0,3	1214/5400	0.12/3,1
10140203	SS 8811 TAB K330	3.30/83,8	19.68/500	2.05/3,05	0.01/0,3		
10140205	SS 8811 TAB K450	4.50/114,3	24.00/610	2.45/3,65	0.01/0,3		
10140207	SS 8811 TAB K750	7.50/190,5	24.00/610	3.66/5,45	0.01/0,3		
SSE *Specially treated Ferritic Stainless Steel (1.4589)* - **Hardened pins**							
10140102	SSE 8811 TAB K325	3.25/82,5	19.68/500	1.98/2,95	0.01/0,3	1350/6000	0.12/3,1
10140103	SSE 8811 TAB K330	3.30/83,8	19.68/500	2.05/3,05	0.01/0,3		
10140104	SSE 8811 TAB K350	3.50/88,9	19.68/500	2.12/3,15	0.01/0,3		
10140105	SSE 8811 TAB K450	4.50/114,3	24.00/610	2.45/3,65	0.01/0,3		
10140107	SSE 8811 TAB K750	7.50/190,5	24.00/610	3.66/5,45	0.01/0,3		
SSA *Austenitic Stainless Steel (AISI 304) - Austenitic pin*							
10140402	SSA 8811 TAB K325	3.25/82,5	19.68/500	1.98/2,95	0.01/0,3	1010/4500	0.12/3,1
10140403	SSA 8811 TAB K330	3.30/83,8	19.68/500	2.05/3,05	0.01/0,3		
10140405	SSA 8811 TAB K450	4.50/114,3	24.00/610	2.45/3,65	0.01/0,3		
10140407	SSA 8811 TAB K750	7.50/190,5	24.00/610	3.66/5,45	0.01/0,3		

8811 B

Sideflexing chain

Pins: Martensitic 1.4057 | **Backflex radius min.:** 3.94 in/100 mm

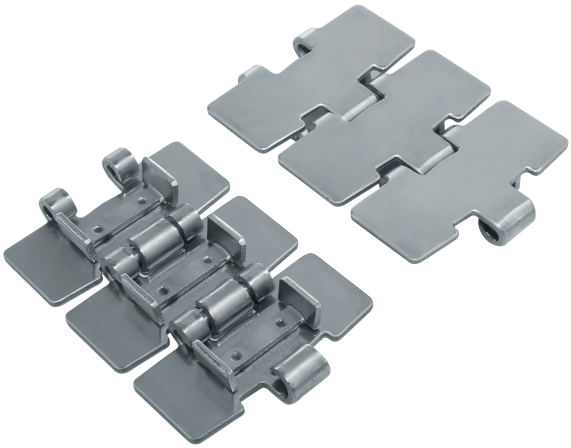

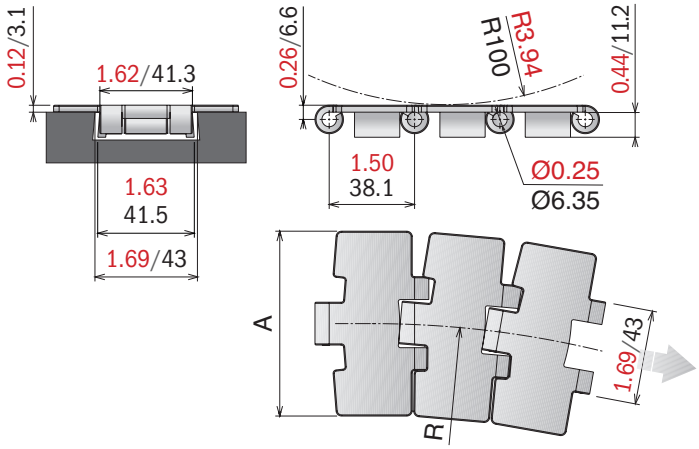

Bevel System

10 feet 3.048 m | 80 links | pg. 80-81/98 | pg. 103 | pg. 388->391

Article-Nr.	Ref.	A (Plate Width) in-mm	R in-mm	Weight lbs/ft-kg/m	Surface Flatness in-mm	Max working load (lbs/N)	Plate Thickness in-mm
SSE *Specially treated Ferritic Stainless Steel (1.4589)* **- Hardened pins**							
10160102	SSE 8811 K325	3.25/82,5	19.68/500	1.95/2,90	0.01/0,3	1350/6000	0.12/3,1
10160104	SSE 8811 K350	3.50/88,9	19.68/500	2.12/3,15	0.01/0,3		
10160105	SSE 8811 K450	4.50/114,3	24.00/610	2.42/3,60	0.01/0,3		
10160107	SSE 8811 K750	7.50/190,5	24.00/610	3.63/5,40	0.01/0,3		
SSA *Austenitic Stainless Steel (AISI 304) - Austenitic pin*							
10160402	SSA 8811 K325	3.25/82,5	19.68/500	1.95/2,90	0.01/0,3	1010/4500	0.12/3,1
10160404	SSA 8811 K350	3.50/88,9	19.68/500	2.12/3,15	0.01/0,3		
10160405	SSA 8811 K450	4.50/114,3	24.00/610	2.42/3,60	0.01/0,3		
10160407	SSA 8811 K750	7.50/190,5	24.00/610	3.63/5,40	0.01/0,3		

8857 M

Sideflexing chain

Pins: Martensitic 1.4057 | **Backflex radius min.:** 3.94 in/100 mm

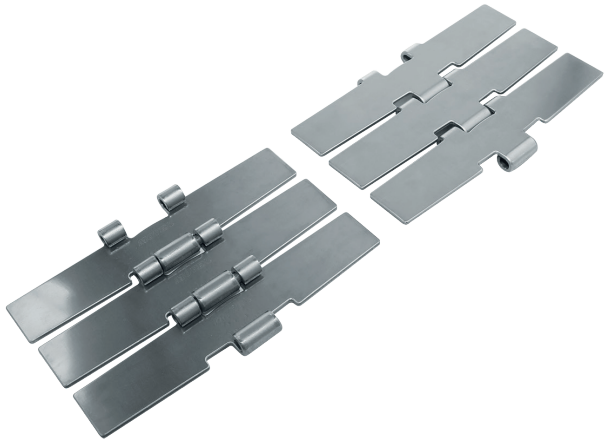

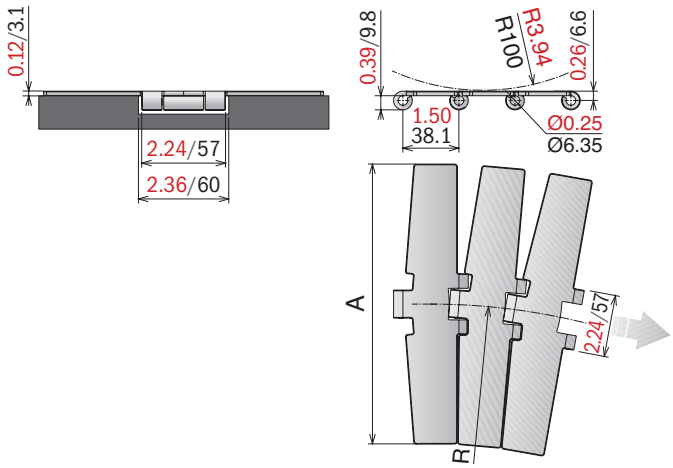

Magnetic System

10 feet
3.048 m
80 links

ppg. 83-91/100

pg. 388->391

Article-Nr.	Ref.	A (Plate Width) in-mm	R in-mm	Weight lbs/ft-kg/m	Surface finish in-^{5}-µm	Max working load (lbs/N)	Plate Thickness in-mm
SSE *Specially treated Ferritic Stainless Steel (1.4589)* **- Hardened pins**							
10180107	**SSE 8857 M K750**	7.50/190,5	29.53/750	3.56/5,30	0.01/0,3	1575/7000	0.12/3,1

815 MINI

Straight running chain

Pins: Martensitic 1.4057 | **Backflex radius min.:** 2.95 in/75 mm

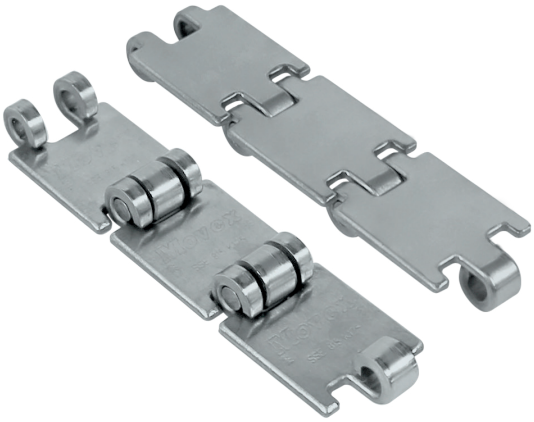

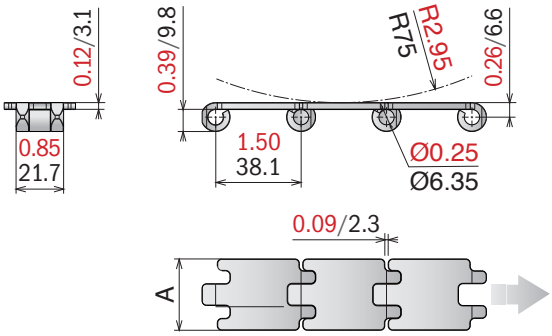

New

10 feet
3.048 m
80 links

pg. 93

pg. 388->391

Article-Nr.	Ref.	A (Plate Width) in-mm	Weight lbs/ft-kg/m	Max working load (lbs/N)	Plate Thickness in-mm
SSE *Specially treated Ferritic Stainless Steel (1.4589)* **- Hardened pins**					
10210117	**SSE 815 K125**	1.25/31,75	0.72/1,07	675/3000	0.12/3,1
10210118	**SSE 815 K175**	1.75/44,45	0.91/1,35		

812 GT/815 GT

Straight running chain

Pins: Martensitic 1.4057 | **Backflex radius min.:** 2.95 in/75 mm

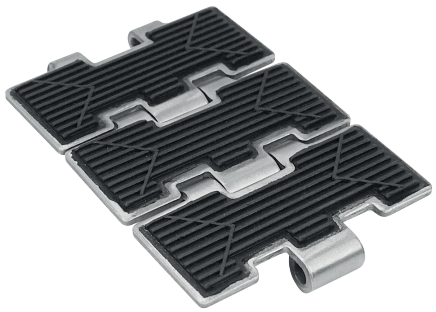

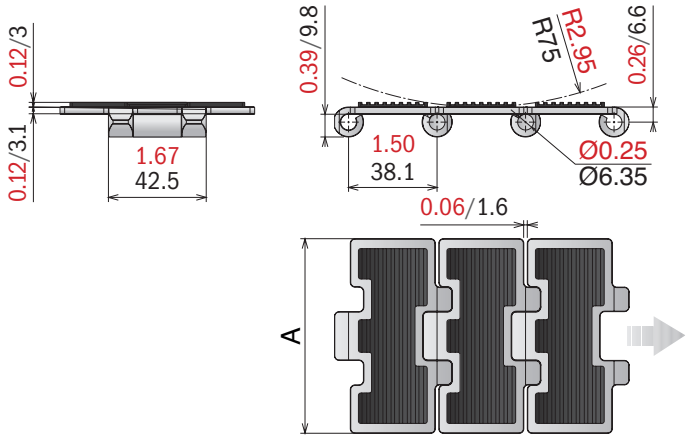

10 feet
3.048 m
80 links

pg. 78-79-91/98

pg. 388->391

Article-Nr.	Ref.	A (Plate Width) in-mm	Weight lbs/ft-kg/m	Max working load (lbs/N)	Plate Thickness in-mm
		SS *Ferritic Stainless Steel (1.4016)*			
10020202	SS 812 GT K325	3.25/82,5	1.88/2,80	1214/5400	Plate 0.12/3,1 Rubber 0.12/3
		SSE *Specially treated Ferritic Stainless Steel (1.4589)* **- Hardened pins**			
10020102	SSE 815 GT K325	3.25/82,5	1.88/2,80	1350/6000	Plate 0.12/3,1 Rubber 0.12/3
10020105	SSE 815 GT K450	4.50/114,3	2.39/3,55		
10020107	SSE 815 GT K750	7.50/190,5	3.73/5,55		

815 TAB GT

Straight running chain

Pins: Martensitic 1.4057 | **Backflex radius min.:** 2.95 in/75 mm

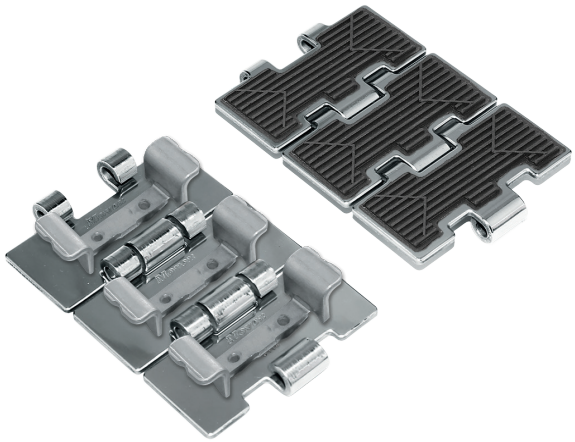

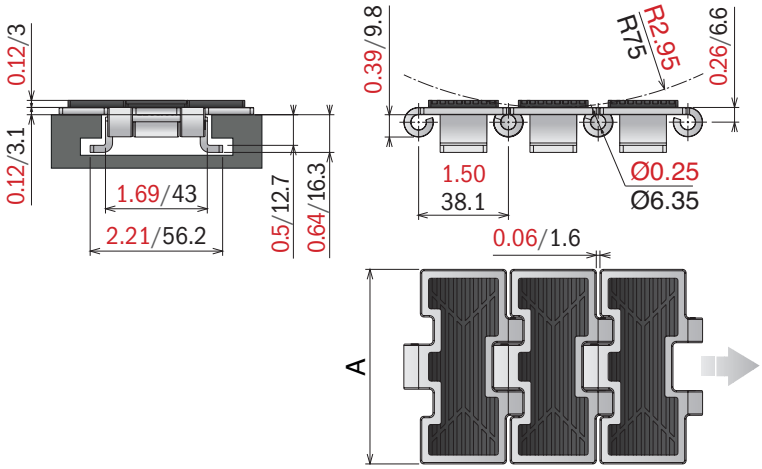

New | **Tab System**

10 feet 3.048 m | 80 links | pg. 78-79-91/98 | pg. 388->391

Article-Nr.	Ref.	A (Plate Width) in-mm	Weight lbs/ft-kg/m	Max working load (lbs/N)	Plate/Rubber Thickness in-mm
SSE *Specially treated Ferritic Stainless Steel (1.4589)* **- Hardened pins**					
10200102	**SSE 815 TAB GT K325**	3.25/82,5	2.28/3,40	1350/6000	Plate 0.12/3,1 Rubber 0.12/3

802 GT/805 GT

Straight running chain

Pins: Martensitic 1.4057 | **Backflex radius min.:** 5.91 in/150 mm

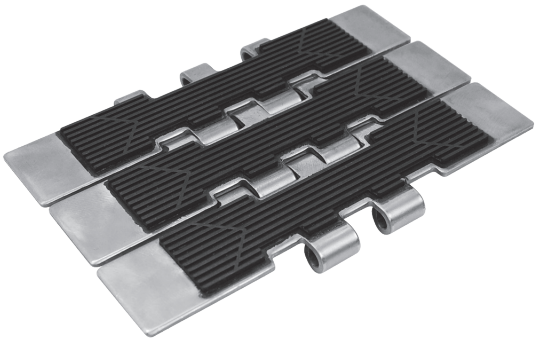

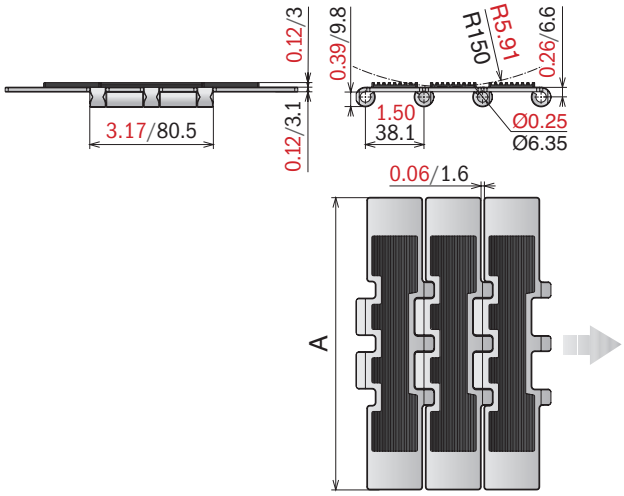

10 feet
3.048 m
80 links

pg. 82-92/99

pg. 388->391

Article-Nr.	Ref.	A (Plate Width) in-mm	Weight lbs/ft-kg/m	Max working load (lbs/N)	Plate/Rubber Thickness in-mm
		SS *Ferritic Stainless Steel (1.4016)*			
10040207	**SS 802 GT K750**	7.50/190,5	4.17/6,20	1575/7000	Plate 0.12/3,1 Rubber 0.12/3
		SSE *Specially treated Ferritic Stainless Steel (1.4589)* **- Hardened pins**			
10040107	**SSE 805 GT K750**	7.50/190,5	4.17/6,20	2020/9000	Plate 0.12/3,1 Rubber 0.12/3

8157 GT

Straight running chain

Pins: Martensitic 1.4057 | **Backflex radius min.:** 5.91 in/150 mm

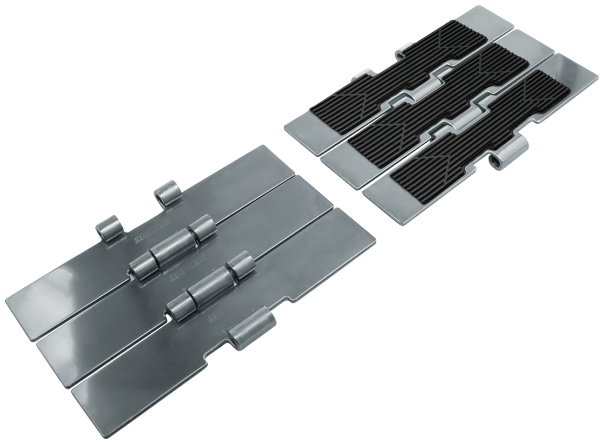

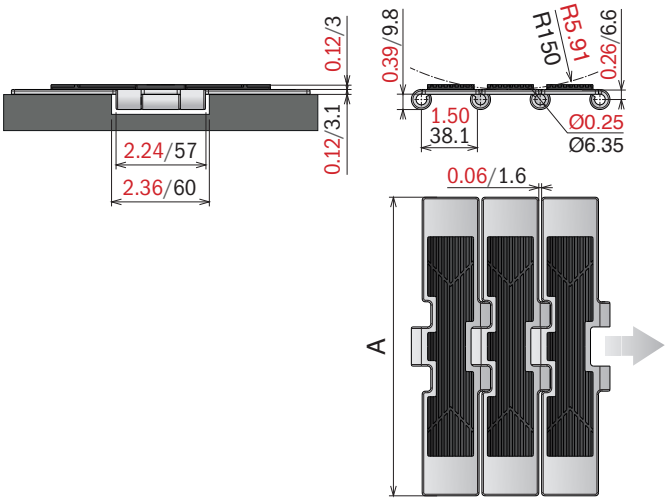

New

10 feet
3.048 m
80 links

pg. 83-93/100

pg. 388->391

Article-Nr.	Ref.	A (Plate Width) in-mm	Weight lbs/ft-kg/m	Max working load (lbs/N)	Plate/Rubber Thickness in-mm
SSE *Specially treated Ferritic Stainless Steel (1.4589)* **- Hardened pins**					
10060107	**SSE 8157 GT K750**	7.50/190,5	4.03/6,00	2248/10000	Plate 0.12/3,1 Rubber 0.12/3

8811 TAB GT

Sideflexing chain

Pins: Martensitic 1.4057 | **Backflex radius min.:** 3.15 in/80 mm

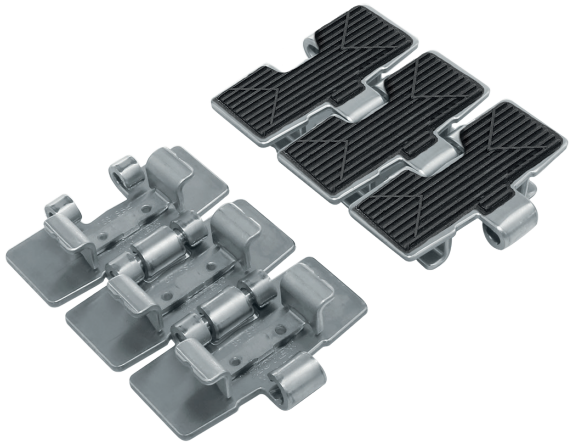

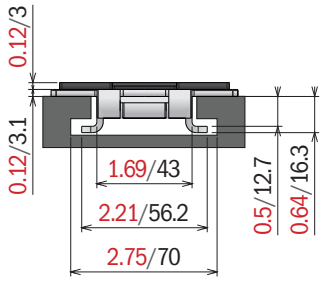

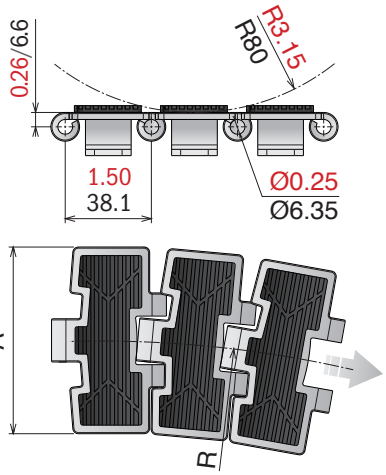

New **Tab System**

10 feet 3.048 m — 80 links | pg. 80-81/100 | pg. 102/104 | pg. 388->391

Article-Nr.	Ref.	A (Plate Width) in-mm	R in-mm	Weight lbs/ft-kg/m	Max working load (lbs/N)	Plate/Rubber Thickness in-mm
SSE *Specially treated Ferritic Stainless Steel (1.4589)* **- Hardened pins**						
10150102	**SSE 8811 TAB GT K325**	3.25/82,5	19.65/500	2.15/3,20	1350/6000	Plate 0.12/3,1 Rubber 0.12/3
10150107	**SSE 8811 TAB GT K750**	7.50/190,5	24.02/610	3.83/5,70		

881 M GT

Sideflexing chain

Pins: Martensitic 1.4057 | **Backflex radius min.:** 3.15 in/80 mm

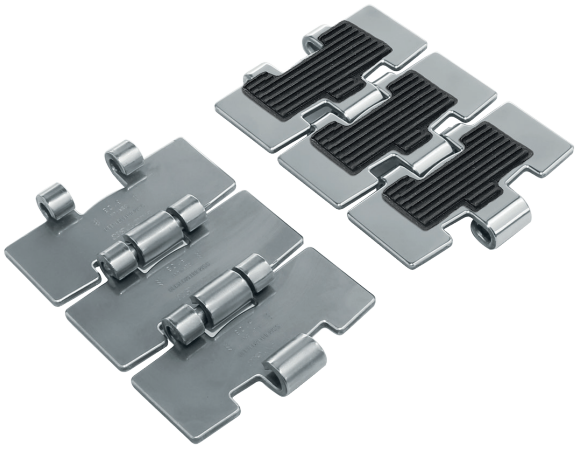

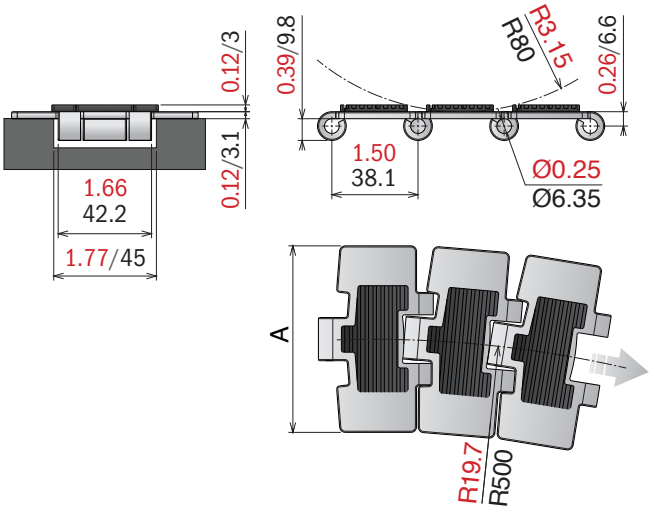

New **Magnetic System**

10 feet 3.048 m | 80 links | pg. 80-81/98 | pg. 388->391

Article-Nr.	Ref.	A (Plate Width) in-mm	Weight lbs/ft-kg/m	Max working load (lbs/N)	Plate/Rubber Thickness in-mm
SSE *Specially treated Ferritic Stainless Steel (1.4589)* **- Hardened pins**					
10090102	**SSE 881 M GT K325**	3.25/82,5	1.87/2,80	1350/6000	Plate 0.12/3,1 Rubber 0.12/3
10090107	**SSE 881 M GT K750**	7.50/190,5	3.35/5,00		

8857 M GT

Sideflexing chain

Pins: Martensitic 1.4057 | **Backflex radius min.:** 5.90 in/150 mm

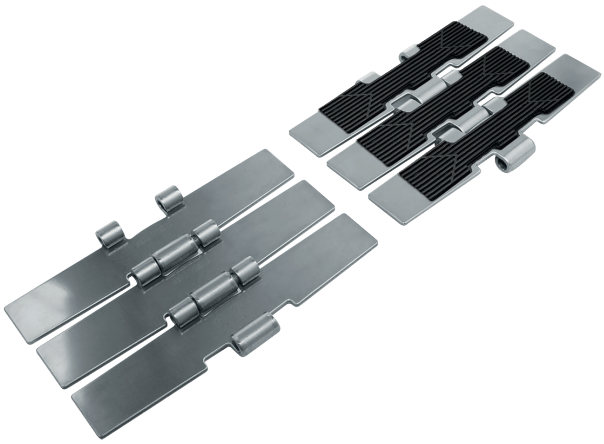

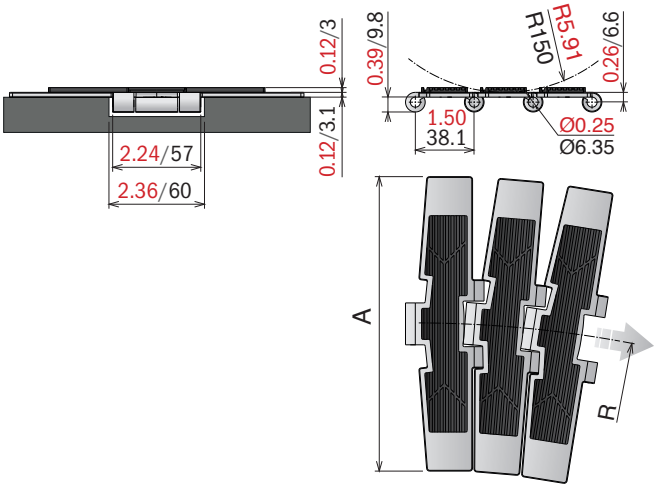

New **Magnetic System**

10 feet
3.048 m
80 links

pg. 83-91/100

pg. 388->391

Article-Nr.	Ref.	A (Plate Width) in-mm	R in-mm	Weight lbs/ft-kg/m	Surface finish in-5-µm	Max working load (lbs/N)	Plate/Rubber Thickness in-mm
SSE *Specially treated Ferritic Stainless Steel (1.4589)* - **Hardened pins**							
10190107	**SSE 8857 M GT K750**	7.50/190,5	29.53/750	3.83/5,70	0.01/0,3	2248/10000	Plate 0.12/3,1 Rubber 0.12/3

1874 TAB

Sideflexing chain

Backflex radius min.: 10.2 in/260 mm

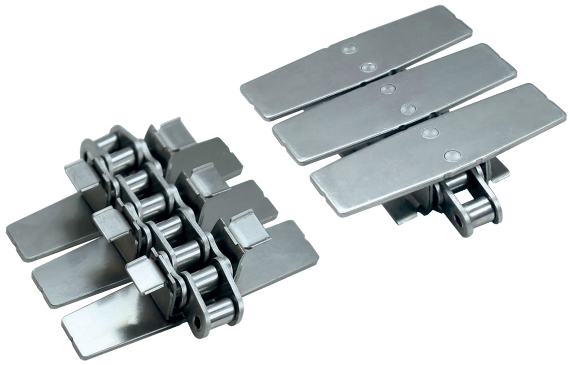

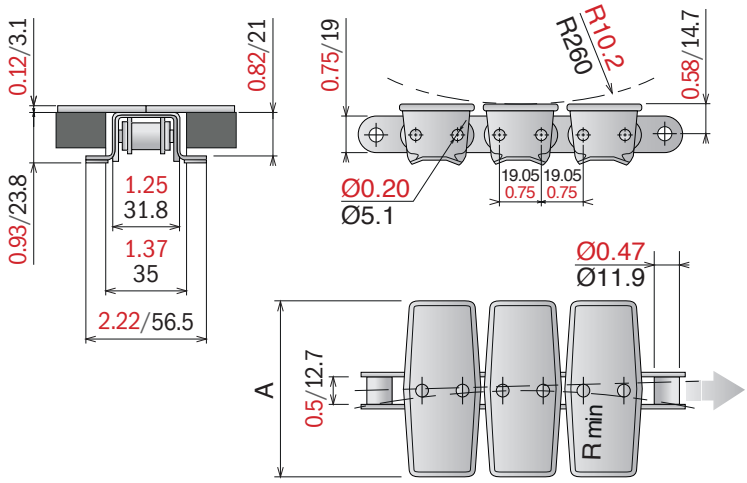

Standard lenght roller chain: 160 Pitches

New

Tab System

10 feet
3.048 m
80 links

SPROCKET
ASA 60
Standard on market

pg. 102-104

pg. 388->391

Article-Nr.	Ref.	A (Plate Width) in-mm	R in-mm	Weight lbs/ft-kg/m	Surface finish in-5-µm	Max working load (lbs/N)	Plate/Rubber Thickness in-mm
			Austenitic Stainless Steel				
10220202	**SS 1874 TAB K325**	3.25/82,5	15.00/381	2.81/4,20	0.02/0,5	1010/4500	Plate 0.12/3,1 Rubber 0.12/3
10220205	**SS 1874 TAB K450**	4.50/114,3	15.00/381	3.21/4,80	0.02/0,5		
10220206	**SS 1874 TAB K600**	6.00/152,4	18.00/457	3.82/5,70	0.02/0,5		
10220207	**SS 1874 TAB K750**	7.50/190,5	24.00/610	4.29/6,40	0.02/0,5		

Movex®

movexii.com

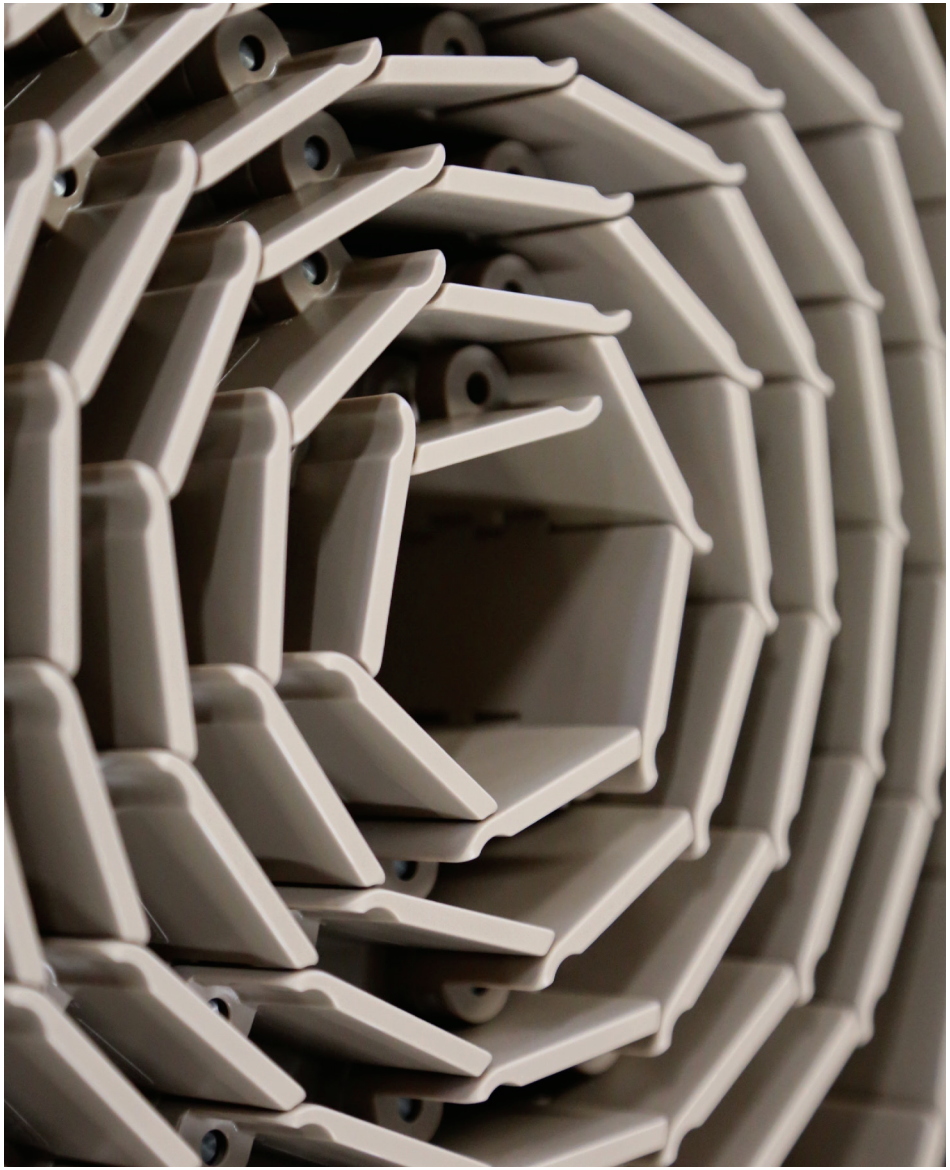

29

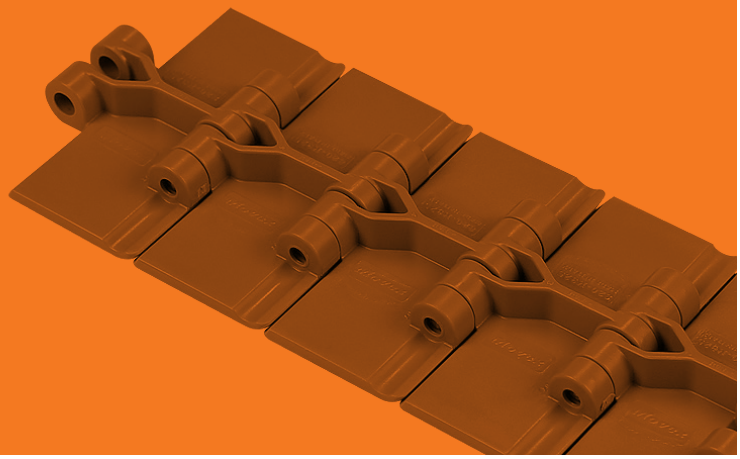

Plastic chains

820 — Pag 30-31
820 V — Pag 32
820 Plastic pin — Pag 32
828 — Pag 33
831 — Pag 34
821 — Pag 35
821 GT — Pag 36
821 LBP — Pag 37
8257 — Pag 38
8257 GT — Pag 39
8257 LBP — Pag 40
878 TAB — Pag 41
879 M — Pag 42
879 TAB — Pag 43
888 — Pag 44
888 GT — Pag 45
880 M — Pag 46
880 TAB — Pag 47
880 V TAB — Pag 48
880 TAB Plastic pin — Pag 48
880 B — Pag 49
880 TAB BO — Pag 50
882 M — Pag 51
882 M GT — Pag 52
882 M LBP — Pag 53
882 TAB — Pag 54
882 TAB GT — Pag 55
882 TAB LBP — Pag 56
1873 — Pag 57
1873 GT — Pag 58
1873 GRIPPER GS1 GS2 GS4 — Pag 59/60/61
1873 D-SHAPE — Pag 62
1873 MX1 — Pag 63
1873 MX2 — Pag 64
878 GRIPPER GS1 GS2 GS4 — Pag 65/66
1843 — Pag 67
SP 1883 — Pag 68
SP 1883 GT — Pag 69
CC 600 — Pag 70
CC 600 TAB — Pag 70
CC 600 D — Pag 71
CC 600 D TAB — Pag 71
CC 1400 — Pag 72
CC 1400 TAB — Pag 72
1701 TAB OP — Pag 73
1701 TAB OPF — Pag 74
1706 — Pag 75
1706 TAB — Pag 75

820 *Straight running chain*

Pins: Stainless Steel | **Backflex radius min.:** 1.97 in/50 mm

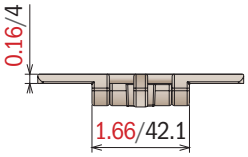

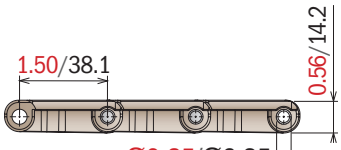

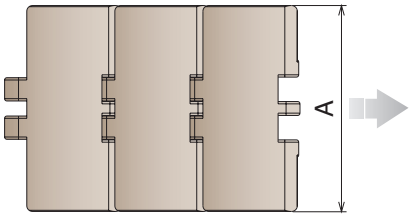

10 feet
3.048 m
80 links

pg. 84-85-92/98

pg. 380->386

Article-Nr.	Ref.	A (Plate Width) in-mm	Weight lbs/ft-kg/m	Max working load (lbs/N)	Material
11010102	LF 820 K325	3.25/82,5	0.59/0,89	365/1625	LF
11010103	LF 820 K330	3.30/83,8	0.60/0,90		
11010104	LF 820 K350	3.50/88,9	0.61/0,91		
11010114	LF 820 K400	4.00/101,6	0.64/0,95		
11010105	LF 820 K450	4.50/114,3	0.67/1,00		
11010106	LF 820 K600	6.00/152,4	0.82/1,22		
11010107	LF 820 K750	7.50/190,5	0.96/1,43		
11010302	MX 820 K325	3.25/82,5	0.59/0,89	284/1260	MX
11010303	MX 820 K330	3.30/83,8	0.60/0,90		
11010304	MX 820 K350	3.50/88,9	0.61/0,91		
11010314	MX 820 K400	4.00/101,6	0.64/0,95		
11010305	MX 820 K450	4.50/114,3	0.67/1,00		
11010306	MX 820 K600	6.00/152,4	0.82/1,22		
11010307	MX 820 K750	7.50/190,5	0.96/1,43		
11011302	MP 820 K325	3.25/82,5	0.59/0,89	365/1625	MP
11011303	MP 820 K330	3.30/83,8	0.60/0,90		
11011304	MP 820 K350	3.50/88,9	0.61/0,91		
11011314	MP 820 K400	4.00/101,6	0.64/0,95		
11011305	MP 820 K450	4.50/114,3	0.67/1,00		
11011306	MP 820 K600	6.00/152,4	0.82/1,22		
11011307	MP 820 K750	7.50/190,5	0.96/1,43		

820 *Straight running chain*

Pins: Stainless Steel | **Backflex radius min.:** 1.97 in/50 mm

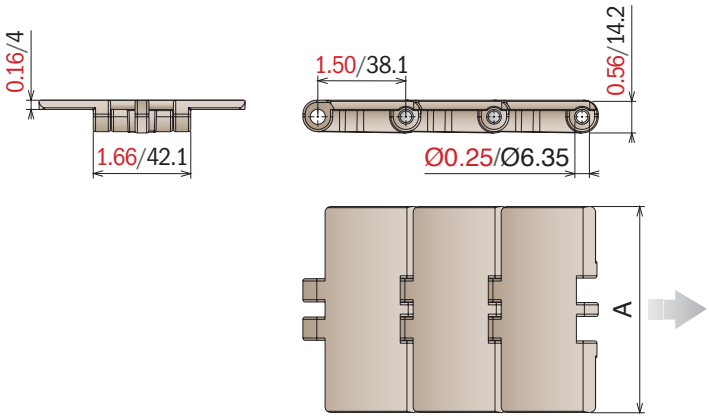

10 feet
3.048 m
80 links

pg. 84-85-92/98

pg. 380->386

Article-Nr.	Ref.	A (Plate Width) in-mm	Weight lbs/ft-kg/m	Max working load (lbs/N)	Material
11011602	DKM 820 K325	3.25/82,5	0.59/0,89	365/1625	DKM
11011603	DKM 820 K330	3.30/83,8	0.60/0,90		
11011604	DKM 820 K350	3.50/88,9	0.61/0,91		
11011614	DKM 820 K400	4.00/101,6	0.64/0,95		
11011605	DKM 820 K450	4.50/114,3	0.67/1,00		
11011606	DKM 820 K600	6.00/152,4	0.82/1,22		
11011607	DKM 820 K750	7.50/190,5	0.96/1,43		
11011702	MWX 820 K325	3.25/82,5	0.59/0,89	365/1625	MWX
11011703	MWX 820 K330	3.30/83,8	0.60/0,90		
11011704	MWX 820 K350	3.50/88,9	0.61/0,91		
11011714	MWX 820 K400	4.00/101,6	0.64/0,95		
11011705	MWX 820 K450	4.50/114,3	0.67/1,00		
11011706	MWX 820 K600	6.00/152,4	0.82/1,22		
11011707	MWX 820 K750	7.50/190,5	0.96/1,43		

820 V

Straight running chain

Pins: Stainless Steel | **Backflex radius min.:** 1.97 in/50 mm

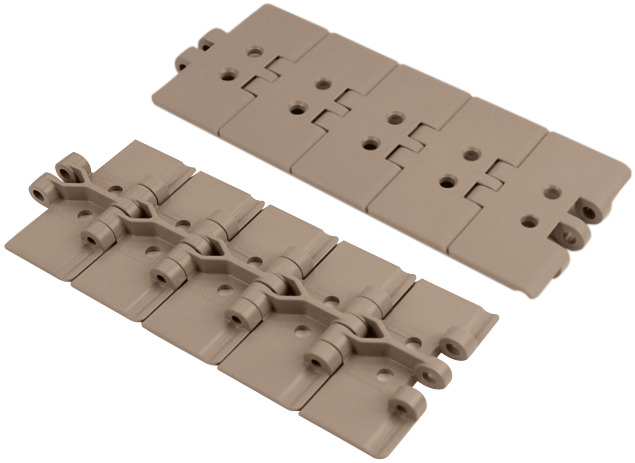

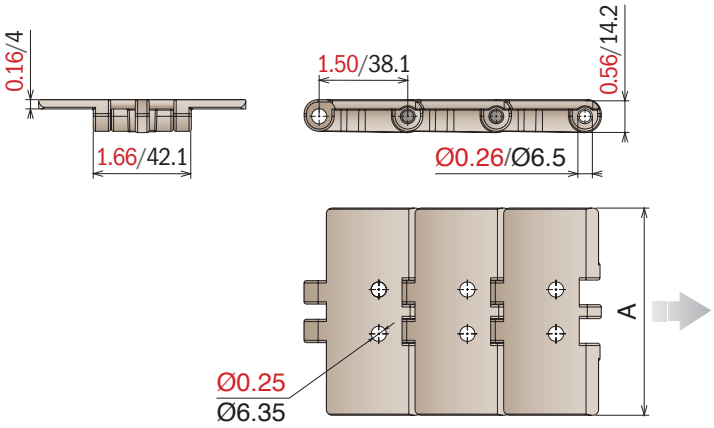

10 feet 3.048 m | 80 links | pg. 84-85-92/98 | pg. 380->386

Article-Nr.	Ref.	A (Plate Width) in-mm	Weight lbs/ft-kg/m	Max working load (lbs/N)	Material
11550102	LF 820 V2 K325	3.25/82,5	0.59/0,89	365/1625	LF
11550105	LF 820 V2 K450	4.50/114,3	0.67/1,00		
11550302	MX 820 V2 K325	3.25/82,5	0.59/0,89	284/1260	MX
11550305	MX 820 V2 K450	4.50/114,3	0.67/1,00		

820 *Plastic pin*

Straight running chain with plastic pin

Pins: Plastic | **Backflex radius min.:** 1.97 in/50 mm

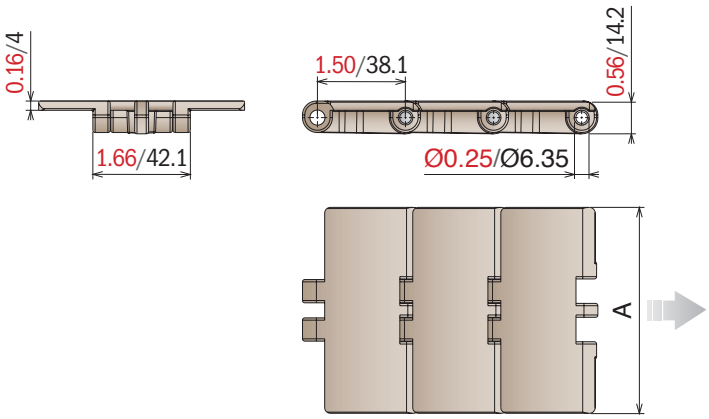

New

10 feet 3.048 m | 80 links | pg. 84-85-92/98 | pg. 380->386

Article-Nr.	Ref.	A (Plate Width) in-mm	Weight lbs/ft-kg/m	Max working load (lbs/N)	Material
11630102	LF 820 K325	3.25/82,5	0.46/0,69	146/650	LF
11630105	LF 820 K450	4.50/114,3	0.54/0,80		

828 *Straight running chain*

Pins: Stainless Steel | **Backflex radius min.:** 1.97 in/50 mm

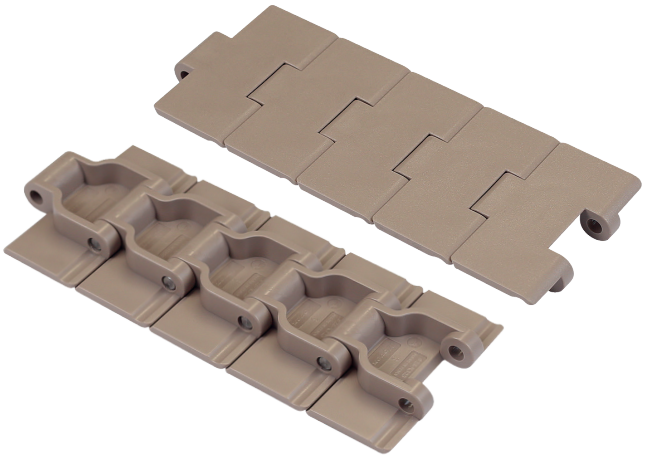

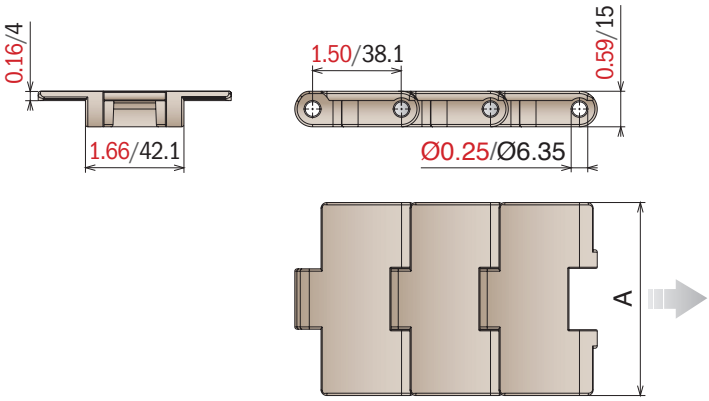

10 feet
3.048 m
80 links

pg. 86-87/98

pg. 380->386

Article-Nr.	Ref.	A (Plate Width) in-mm	Weight lbs/ft-kg/m	Max working load (lbs/N)	Material
11020102	LF 828 K325	3.25/82,5	0.72/1,07	522/2320	LF
11020103	LF 828 K330	3.30/83,8	0.76/1,13		
11020302	MX 828 K325	3.25/82,5	0.72/1,07	418/1860	MX
11020303	MX 828 K330	3.30/83,8	0.76/1,13		
11021302	MP 828 K325	3.25/82,5	0.72/1,07	522/2320	MP
11021303	MP 828 K330	3.30/83,8	0.76/1,13		
11021602	DKM 828 K325	3.25/82,5	0.72/1,07	522/2320	DKM
11021603	DKM 828 K330	3.30/83,8	0.76/1,13		
11021702	MWX 828 K325	3.25/82,5	0.72/1,07	522/2320	MWX
11021703	MWX 828 K330	3.30/83,8	0.76/1,13		

831 *Straight running chain*

Pins: Stainless Steel | **Backflex radius min.:** 1.97 in/50 mm

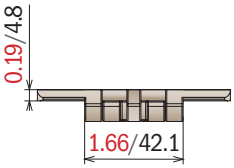

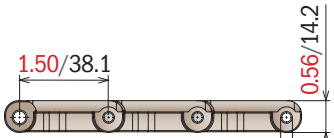

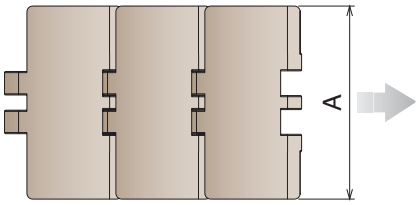

10 feet
3.048 m
80 links

pg. 84-85-92/98

pg. 380->386

Article-Nr.	Ref.	A (Plate Width) in-mm	Weight lbs/ft-kg/m	Max working load (lbs/N)	Material
11030102	LF 831 K325	3.25/82,5	0.67/1,00	365/1625	LF
11030105	LF 831 K450	4.50/114,3	0.86/1,28		
11030107	LF 831 K750	7.50/190,5	1.20/1,80		
11030302	MX 831 K325	3.25/82,5	0.67/1,00	284/1260	MX
11030305	MX 831 K450	4.50/114,3	0.86/1,28		
11030307	MX 831 K750	7.50/190,5	1.20/1,80		
11031302	MP 831 K325	3.25/82,5	0.67/1,00	365/1625	MP
11031305	MP 831 K450	4.50/114,3	0.86/1,28		
11031307	MP 831 K750	7.50/190,5	1.20/1,80		
11031602	DKM 831 K325	3.25/82,5	0.67/1,00	365/1625	DKM
11031605	DKM 831 K450	4.50/114,3	0.86/1,28		
11031607	DKM 831 K750	7.50/190,5	1.20/1,80		
11031702	MWX 831 K325	3.25/82,5	0.67/1,00	365/1625	MWX
11031705	MWX 831 K450	4.50/114,3	0.86/1,28		
11031707	MWX 831 K750	7.50/190,5	1.20/1,80		

821 *Straight running chain*

Pins: Stainless Steel | **Backflex radius min.:** 1.97 in/50 mm

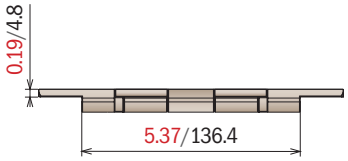

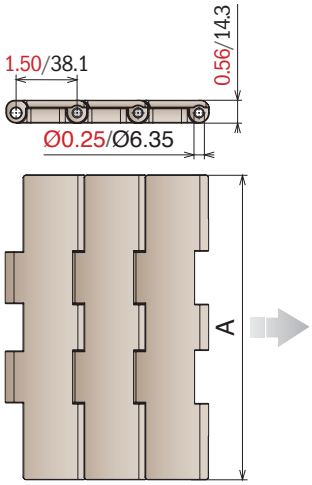

10 feet
3.048 m
80 links

pg. 82/99

pg. 380->386

Article-Nr.	Ref.	A (Plate Width) in-mm	Weight lbs/ft-kg/m	Max working load (lbs/N)	Material
11040107	LF 821 K750	7.50/190,5	1.71/2,55	623/2770	LF
11040108	LF 821 K1000	10.00/254,0	2.04/3,05		
11040109	LF 821 K1200	12.00/304,8	2.24/3,35		
11040307	MX 821 K750	7.50/190,5	1.71/2,55	495/2200	MX
11040308	MX 821 K1000	10.00/254,0	2.04/3,05		
11040309	MX 821 K1200	12.00/304,8	2.24/3,35		
11041307	MP 821 K750	7.50/190,5	1.71/2,55	623/2770	MP
11041308	MP 821 K1000	10.00/254,0	2.04/3,05		
11041309	MP 821 K1200	12.00/304,8	2.24/3,35		
11041607	DKM 821 K750	7.50/190,5	1.71/2,55	623/2770	DKM
11041608	DKM 821 K1000	10.00/254,0	2.04/3,05		
11041609	DKM 821 K1200	12.00/304,8	2.24/3,35		
11041707	MWX 821 K750	7.50/190,5	1.71/2,55	623/2770	MWX
11041708	MWX 821 K1000	10.00/254,0	2.04/3,05		
11041709	MWX 821 K1200	12.00/304,8	2.24/3,35		

821 GT

Straight running chain

Pins: Stainless Steel | **Backflex radius min.:** 1.97 in/50 mm | **TPE Rubber:** 75 ShA

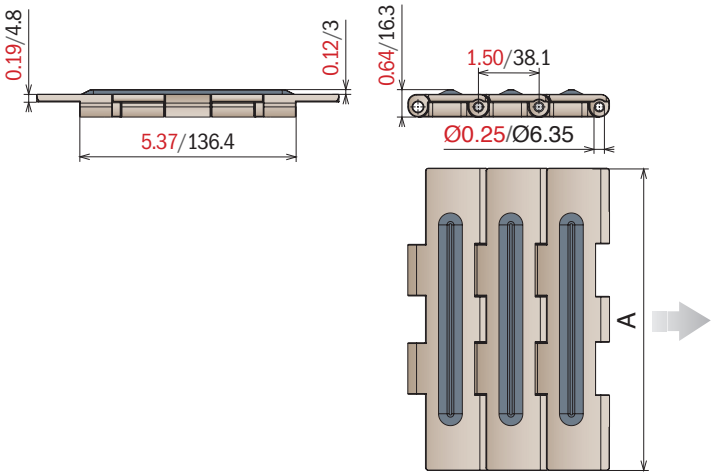

10 feet
3.048 m
80 links

pg. 82/99

pg. 380->386

Article-Nr.	Ref.	A (Plate Width) in-mm	Weight lbs/ft-kg/m	Max working load (lbs/N)	Material
11050107	LF 821 GT K750	7.50/190,5	1.71/2,55	623/2770	LF
11050108	LF 821 GT K1000	10.00/254,0	2.04/3,05		
11050109	LF 821 GT K1200	12.00/304,8	2.24/3,35		
11050307	MX 821 GT K750	7.50/190,5	1.71/2,55	495/2200	MX
11050308	MX 821 GT K1000	10.00/254,0	2.04/3,05		
11050309	MX 821 GT K1200	12.00/304,8	2.24/3,35		

821 LBP

Straight running chain

Pins: Stainless Steel | **Backflex radius min.:** 5.90 in/150 mm

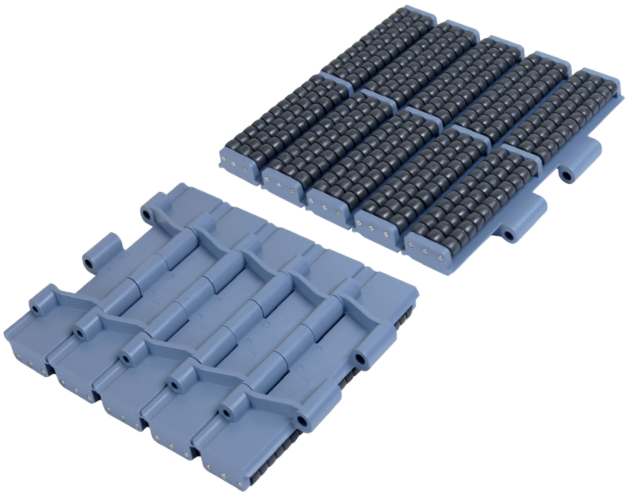

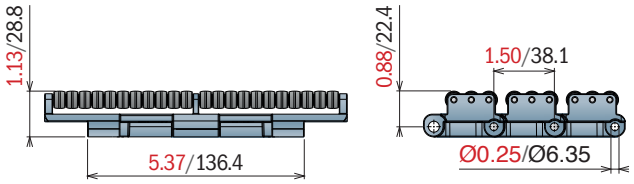

K750

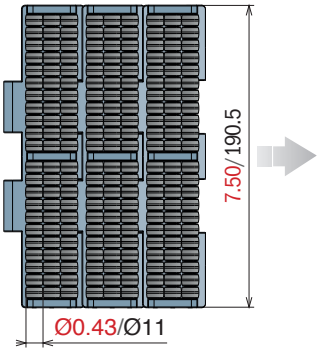

K1000

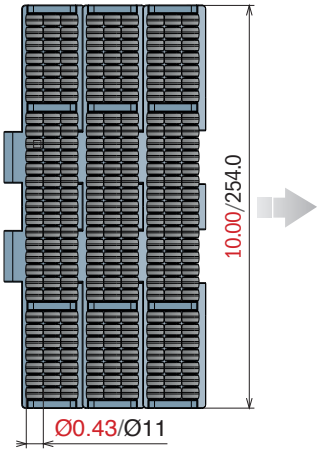

K1200

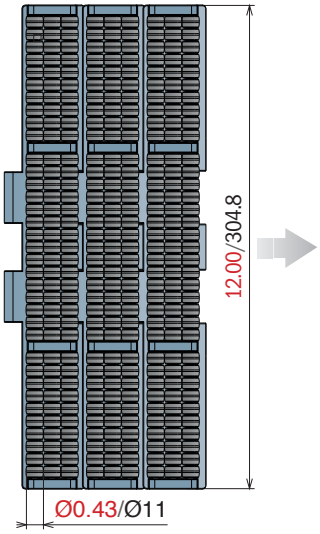

5 feet
1.524 m

40 links | pg. 82/99 | pg. 380->386

Article-Nr.	Ref.	A (Plate Width) in-mm	Weight lbs/ft-kg/m	Max working load (lbs/N)	Material
11060107	LFA 821 LBP K750	7.50/190,5	3.82/5,70	623/2770	LFA
11060108	LFA 821 LBP K1000	10.00/254,0	4.72/7,05		
11060109	LFA 821 LBP K1200	12.00/304,8	5.50/8,21		

8257 *Straight running chain*

Pins: Stainless Steel | **Backflex radius min.:** 1.97 in/50 mm

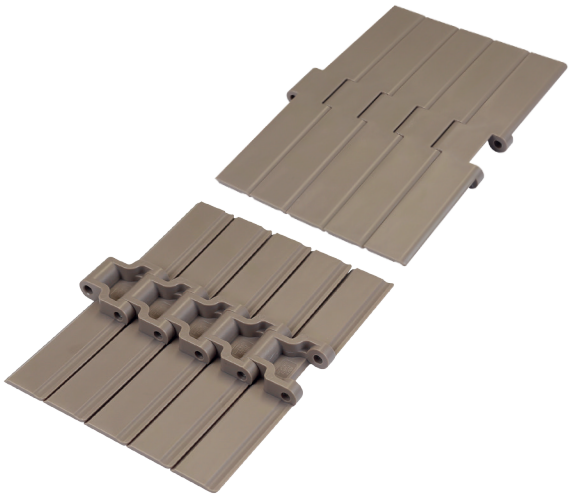

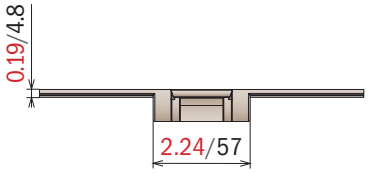

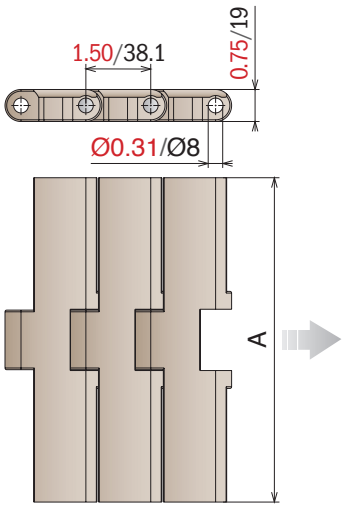

10 feet
3.048 m
80 links

pg. 88-89/100

pg. 380->386

Article-Nr.	Ref.	A (Plate Width) in-mm	Weight lbs/ft-kg/m	Max working load (lbs/N)	Material
11070107	LF 8257 K750	7.50/190,5	1.71/2,55	861/3830	LF
11070108	LF 8257 K1000	10.00/254,0	2.04/3,05		
11070109	LF 8257 K1200	12.00/304,8	2.24/3,35		
11070307	MX 8257 K750	7.50/190,5	1.71/2,55	685/3050	MX
11070308	MX 8257 K1000	10.00/254,0	2.04/3,05		
11070309	MX 8257 K1200	12.00/304,8	2.24/3,35		
11071307	MP 8257 K750	7.50/190,5	1.71/2,55	861/3830	MP
11071308	MP 8257 K1000	10.00/254,0	2.04/3,05		
11071309	MP 8257 K1200	12.00/304,8	2.24/3,35		
11071607	DKM 8257 K750	7.50/190,5	1.71/2,55	861/3830	DKM
11071608	DKM 8257 K1000	10.00/254,0	2.04/3,05		
11071609	DKM 8257 K1200	12.00/304,8	2.24/3,35		
11071707	MWX 8257 K750	7.50/190,5	1.71/2,55	861/3830	MWX
11071708	MWX 8257 K1000	10.00/254,0	2.04/3,05		
11071709	MWX 8257 K1200	12.00/304,8	2.24/3,35		

8257 GT

Straight running chain

Pins: Stainless Steel | **Backflex radius min.:** 1.97 in/50 mm | **TPE Rubber:** 75 ShA

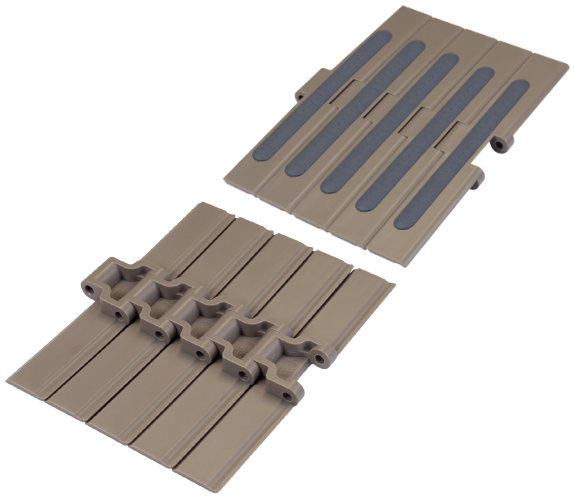

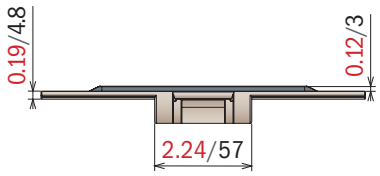

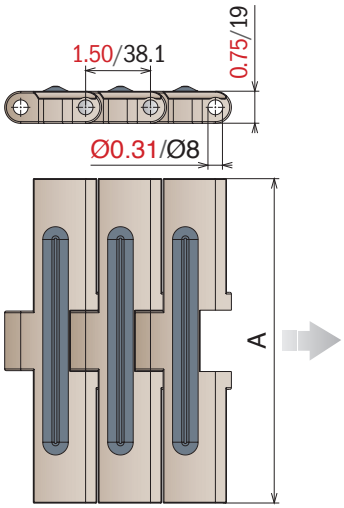

10 feet
3.048 m
80 links

pg. 88-89/100

pg. 380->386

Article-Nr.	Ref.	A (Plate Width) in-mm	Weight lbs/ft-kg/m	Max working load (lbs/N)	Material
11080107	LF 8257 GT K750	7.50/190,5	1.51/2,55	861/3830	LF
11080108	LF 8257 GT K1000	10.00/254,0	1.74/2,60		
11080109	LF 8257 GT K1200	12.00/304,8	1.98/2,95		
11080307	MX 8257 GT K750	7.50/190,5	1.51/2,55	685/3050	MX
11080308	MX 8257 GT K1000	10.00/254,0	1.74/2,60		
11080309	MX 8257 GT K1200	12.00/304,8	1.98/2,95		

8257 LBP

Straight running chain

Pins: Stainless Steel | **Backflex radius min.:** 7.87 in/200 mm

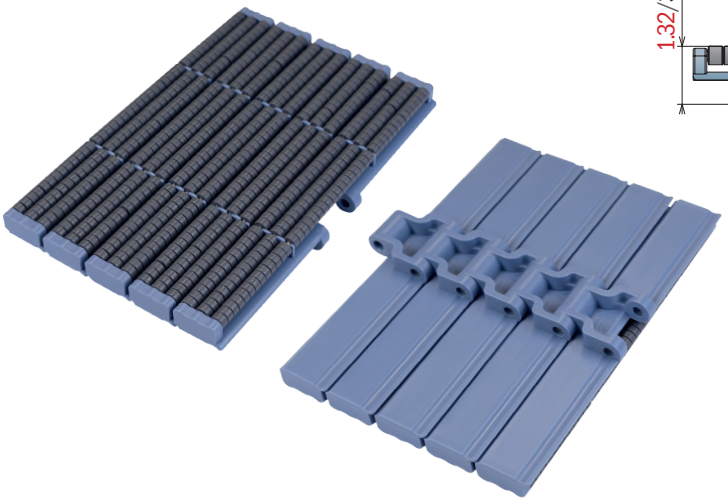

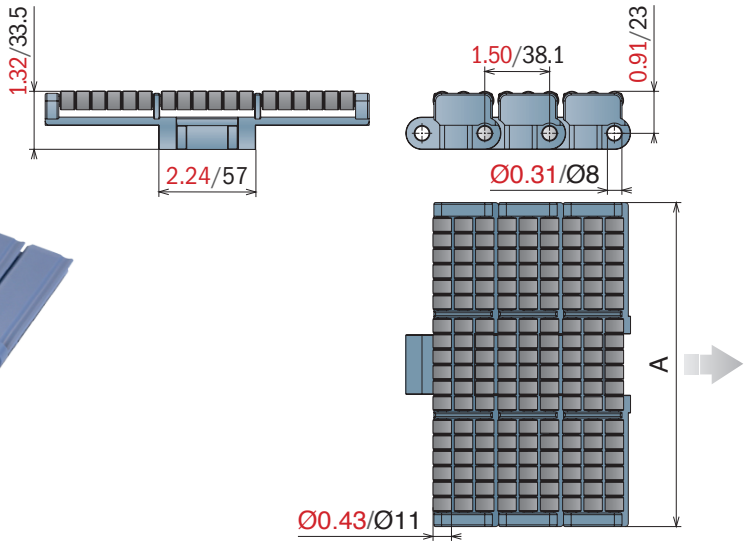

5 feet
1.524 m
40 links

pg. 88-89/100

pg. 380->386

Article-Nr.	Ref.	A (Plate Width) in-mm	Weight lbs/ft-kg/m	Max working load (lbs/N)	Material
11090107	LFA 8257 LBP K750	7.50/190,5	3.80/5,65	861/3830	LFA
11090108	LFA 8257 LBP K1000	10.00/254,0	4.79/7,16		
11090109	LFA 8257 LBP K1200	12.00/304,8	5.39/8,05		

878 TAB

Sideflexing chain

Pins: Stainless Steel | **Backflex radius min.:** 1.57 in/40 mm

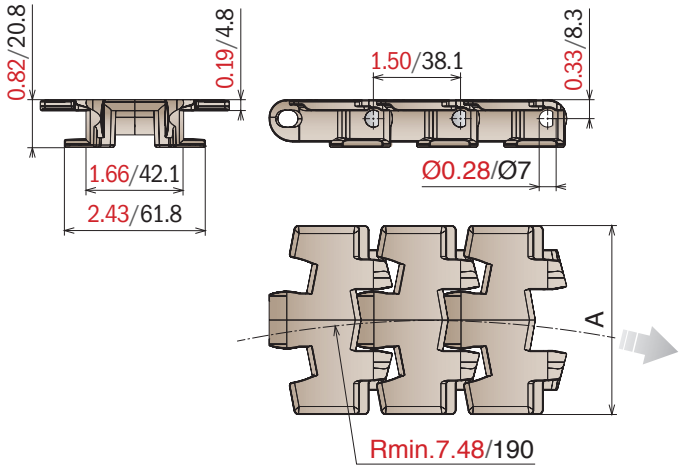

Tab System

10 feet 3.048 m | 80 links | pg. 86-87 | pg. 102/104 | pg. 380->386

Article-Nr.	Ref.	A (Plate Width) in-mm	Weight lbs/ft-kg/m	Max working load (lbs/N)	Material
11190102	LF 878 TAB K325	3.25/82,5	0.71/1,06	495/2200	LF
11190105	LF 878 TAB K450	4.50/114,3	0.79/1,18		
11190302	MX 878 TAB K325	3.25/82,5	0.71/1,06	395/1750	MX
11190305	MX 878 TAB K450	4.50/114,3	0.79/1,18		
11191302	MP 878 TAB K325	3.25/82,5	0.71/1,06	495/2200	MP
11191305	MP 878 TAB K450	4.50/114,3	0.79/1,18		
11191602	DKM 878 TAB K325	3.25/82,5	0.71/1,06	495/2200	DKM
11191605	DKM 878 TAB K450	4.50/114,3	0.79/1,18		
11191702	MWX 878 TAB K325	3.25/82,5	0.71/1,06	495/2200	MWX
11191705	MWX 878 TAB K450	4.50/114,3	0.79/1,18		

879 M

Sideflexing chain

Pins: Stainless Steel | **Backflex radius min.:** 1.97 in/50 mm

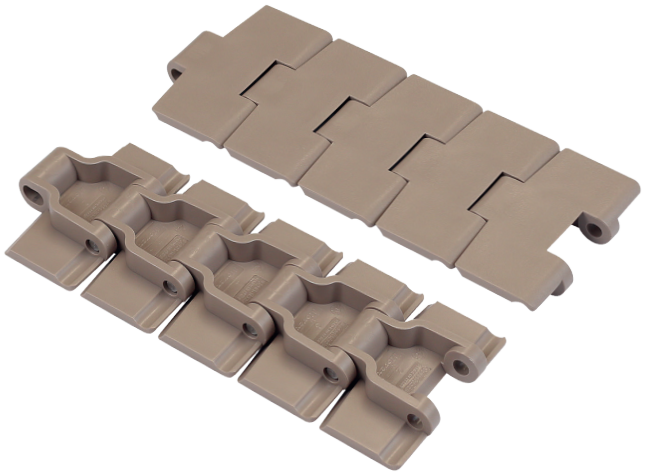

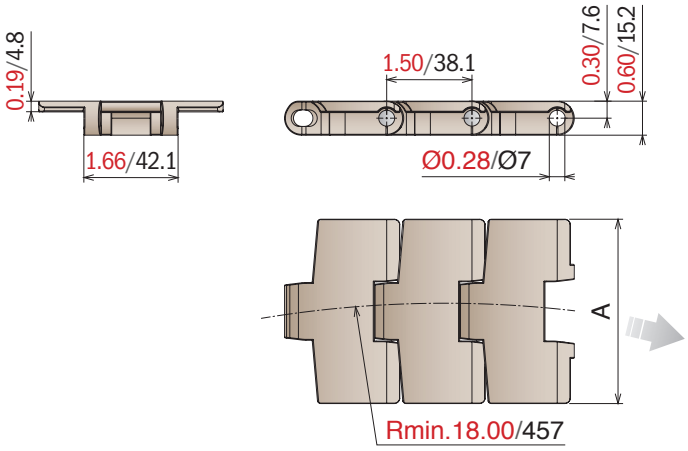

Magnetic System

10 feet 3.048 m | 80 links | pg. 86-87/98 | pg. 380->386

Article-Nr.	Ref.	A (Plate Width) in-mm	R in-mm	Weight lbs/ft-kg/m	Max working load (lbs/N)	Material
11240102	LF 879 M K325	3.25/82,5	18.00/457	0.70/1,05	495/2200	LF
11240105	LF 879 M K450	4.50/114,3	18.00/457	0.77/1,15		
11240302	MX 879 M K325	3.25/82,5	18.00/457	0.70/1,05	395/1750	MX
11240305	MX 879 M K450	4.50/114,3	18.00/457	0.77/1,15		
11241302	MP 879 M K325	3.25/82,5	18.00/457	0.70/1,05	495/2200	MP
11241305	MP 879 M K450	4.50/114,3	18.00/457	0.77/1,15		
11241602	DKM 879 M K325	3.25/82,5	18.00/457	0.70/1,05	495/2200	DKM
11241605	DKM 879 M K450	4.50/114,3	18.00/457	0.77/1,15		
11241702	MWX 879 M K325	3.25/82,5	18.00/457	0.70/1,05	495/2200	MWX
11241705	MWX 879 M K450	4.50/114,3	18.00/457	0.77/1,15		

879 TAB

Sideflexing chain

Pins: Stainless Steel | **Backflex radius min.:** 1.97 in/50 mm

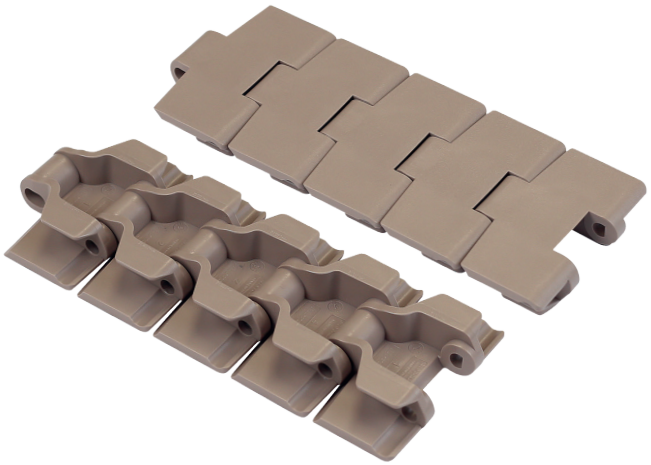

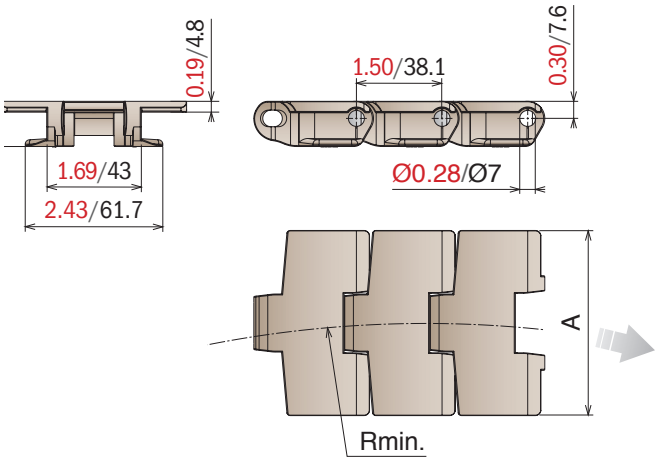

Tab System

10 feet 3.048 m | 80 links | pg. 86-87/98 | pg. 102/104 | pg. 380->386

Article-Nr.	Ref.	A (Plate Width) in-mm	R in-mm	Weight lbs/ft-kg/m	Max working load (lbs/N)	Material
11250102	LF 879 TAB K325	3.25/82,5	18.00/457	0.68/1,01	495/2200	LF
11250105	LF 879 TAB K450	4.50/114,3	24.00/610	0.76/1,13		
11250302	MX 879 TAB K325	3.25/82,5	18.00/457	0.68/1,01	395/1750	MX
11250305	MX 879 TAB K450	4.50/114,3	24.00/610	0.76/1,13		
11251302	MP 879 TAB K325	3.25/82,5	18.00/457	0.68/1,01	495/2200	MP
11251305	MP 879 TAB K450	4.50/114,3	24.00/610	0.76/1,13		
11251602	DKM 879 TAB K325	3.25/82,5	18.00/457	0.68/1,01	495/2200	DKM
11251605	DKM 879 TAB K450	4.50/114,3	24.00/610	0.76/1,13		
11251702	MWX 879 TAB K325	3.25/82,5	18.00/457	0.68/1,01	495/2200	MWX
11251705	MWX 879 TAB K450	4.50/114,3	24.00/610	0.76/1,13		

888 *Sideflexing chain*

Pins: Stainless Steel | **Backflex radius min.:** 1.57 in/40 mm

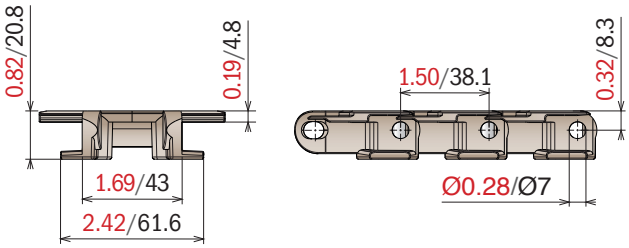

W80

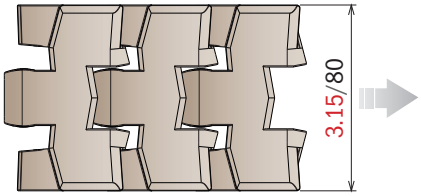

W140

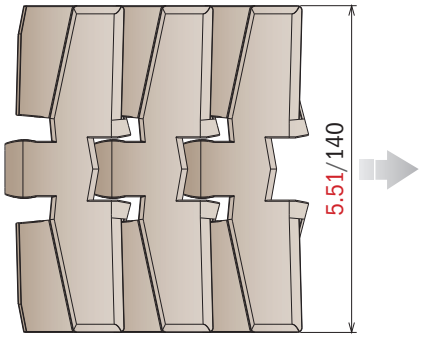

W200

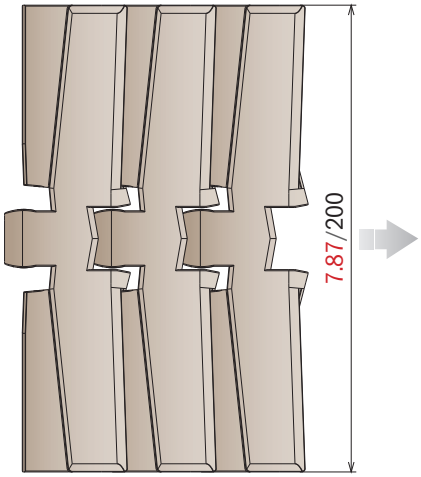

New | **Tab System**

10 feet 3.048 m | 80 links | pg. 86-87 | pg. 102/104 | pg. 380->386

Article-Nr.	Ref.	A (Plate Width) in-mm	R in-mm	Weight lbs/ft-kg/m	Max working load (lbs/N)	Material
11700119	LF 888 W80	3.15/80,0	7.87/200	0.70/1,05	495/2200	LF
11700120	LF 888 W140	5.51/140,0	19.68/500	0.88/1,32		
11700121	LF 888 W200	7.87/200,0	19.68/500	1.08/1,62		

888 GT

Sideflexing chain

Pins: Stainless Steel | **Backflex radius min.:** 1.57 in/40 mm | **TPE Rubber:** 75 ShA

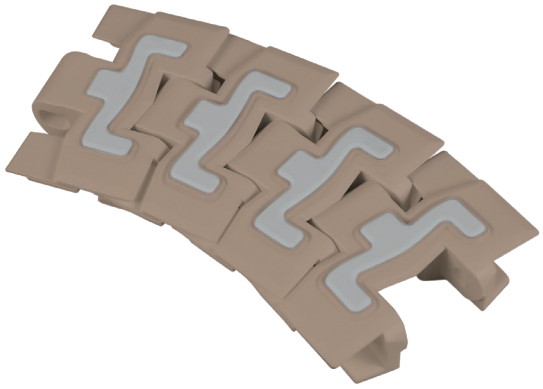

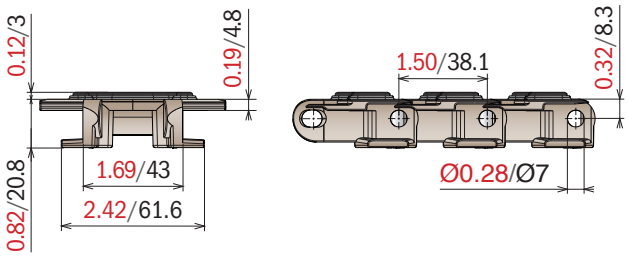

W80

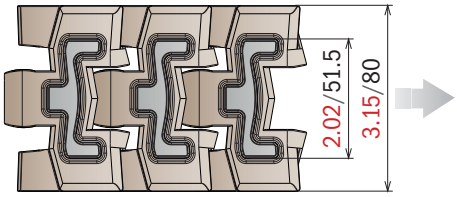

W140

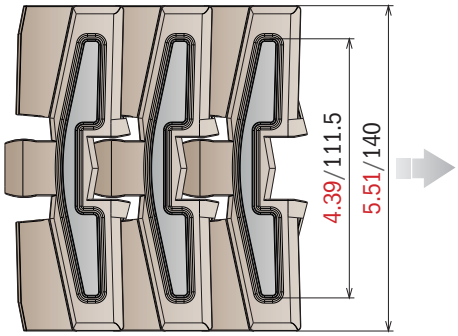

W200

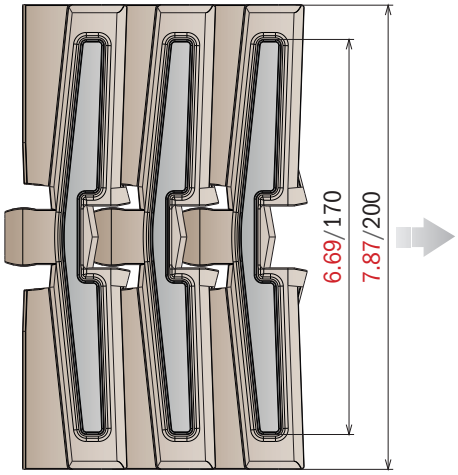

New | **Tab System**

10 feet
3.048 m
80 links | pg. 86-87 | pg. 102/104 | pg. 380->386

Article-Nr.	Ref.	A (Plate Width) in-mm	R in-mm	Weight lbs/ft-kg/m	Max working load (lbs/N)	Material
11710119	LF 888 GT W80	3.15/80,0	7.87/200	0.77/1,15	495/2200	LF
11710120	LF 888 GT W140	5.51/140,0	19.68/500	0.95/1,43		
11710121	LF 888 GT W200	7.87/200,0	19.68/500	1.17/1,75		

880 M

Sideflexing chain

Pins: Stainless Steel | **Backflex radius min.:** 1.97 in/50 mm

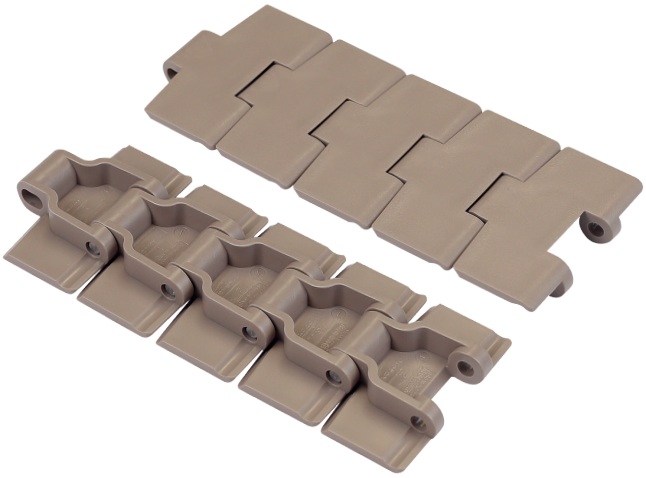

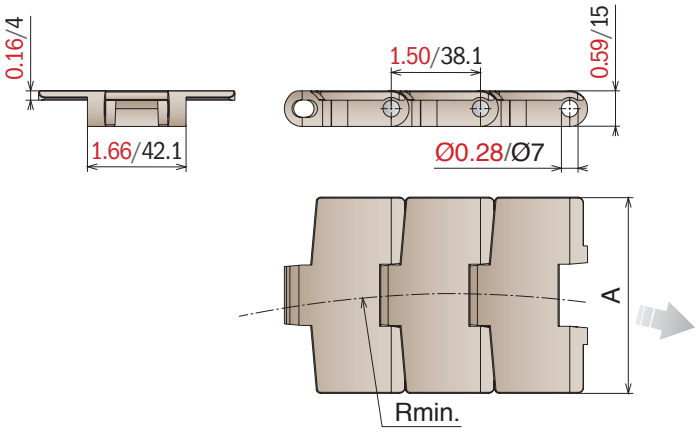

Magnetic System

10 feet 3.048 m | 80 links | pg. 86-87/98 | pg. 380->386

Article-Nr.	Ref.	A (Plate Width) in-mm	R in-mm	Weight lbs/ft-kg/m	Max working load (lbs/N)	Material
11100102	LF 880 M K325	3.25/82,5	19.68/500	0.70/1,05	495/2200	LF
11100103	LF 880 M K330	3.30/83,8	18.00/457	0.73/1,09		
11100105	LF 880 M K450	4.50/114,3	18.00/457	0.77/1,15		
11100302	MX 880 M K325	3.25/82,5	19.68/500	0.70/1,05	395/1750	MX
11100303	MX 880 M K330	3.30/83,8	18.00/457	0.73/1,09		
11100305	MX 880 M K450	4.50/114,3	18.00/457	0.77/1,15		
11101302	MP 880 M K325	3.25/82,5	19.68/500	0.70/1,05	495/2200	MP
11101303	MP 880 M K330	3.30/83,8	18.00/457	0.73/1,09		
11101305	MP 880 M K450	4.50/114,3	18.00/457	0.77/1,15		
11101602	DKM 880 M K325	3.25/82,5	19.68/500	0.70/1,05	495/2200	DKM
11101603	DKM 880 M K330	3.30/83,8	18.00/457	0.73/1,09		
11101605	DKM 880 M K450	4.50/114,3	18.00/457	0.77/1,15		
11101702	MWX 880 M K325	3.25/82,5	19.68/500	0.70/1,05	495/2200	MWX
11101703	MWX 880 M K330	3.30/83,8	18.00/457	0.73/1,09		
11101705	MWX 880 M K450	4.50/114,3	18.00/457	0.77/1,15		

880 TAB

Sideflexing chain

Pins: Stainless Steel | **Backflex radius min.:** 1.57 in/40 mm

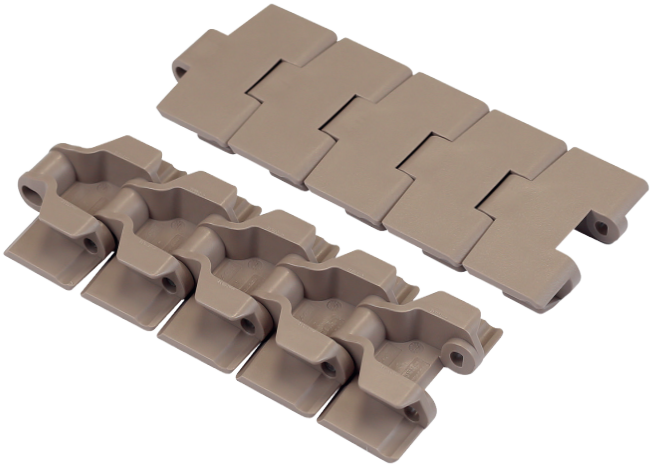

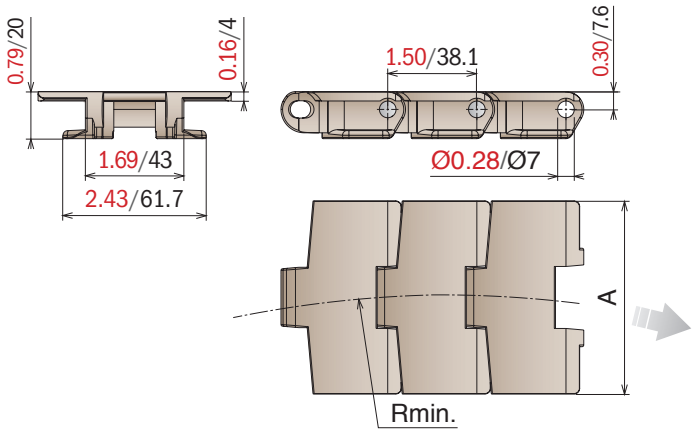

Tab System

10 feet 3.048 m | 80 links | pg. 86-87 | pg. 102/104 | pg. 380->386

Article-Nr.	Ref.	A (Plate Width) in-mm	R in-mm	Weight lbs/ft-kg/m	Max working load (lbs/N)	Material
11110102	LF 880 TAB K325	3.25/82,5	19.68/500	0.68/1,015	495/2200	LF
11110103	LF 880 TAB K330	3.30/83,8	18.00/457	0.69/1,018		
11110105	LF 880 TAB K450	4.50/114,3	18.00/457	0.73/1,09		
11110302	MX 880 TAB K325	3.25/82,5	19.68/500	0.68/1,015	395/1750	MX
11110303	MX 880 TAB K330	3.30/83,8	18.00/457	0.69/1,018		
11110305	MX 880 TAB K450	4.50/114,3	18.00/457	0.73/1,09		
11111302	MP 880 TAB K325	3.25/82,5	19.68/500	0.68/1,015	495/2200	MP
11111303	MP 880 TAB K330	3.30/83,8	18.00/457	0.69/1,018		
11111305	MP 880 TAB K450	4.50/114,3	18.00/457	0.73/1,09		
11111602	DKM 880 TAB K325	3.25/82,5	19.68/500	0.68/1,015	495/2200	DKM
11111603	DKM 880 TAB K330	3.30/83,8	18.00/457	0.69/1,018		
11111605	DKM 880 TAB K450	4.50/114,3	18.00/457	0.73/1,09		
11111702	MWX 880 TAB K325	3.25/82,5	19.68/500	0.68/1,015	495/2200	MWX
11111703	MWX 880 TAB K330	3.30/83,8	18.00/457	0.69/1,018		
11111705	MWX 880 TAB K450	4.50/114,3	18.00/457	0.73/1,09		

880 V TAB

Sideflexing chain

Pins: Stainless Steel | **Backflex radius min.:** 1.57 in/40 mm

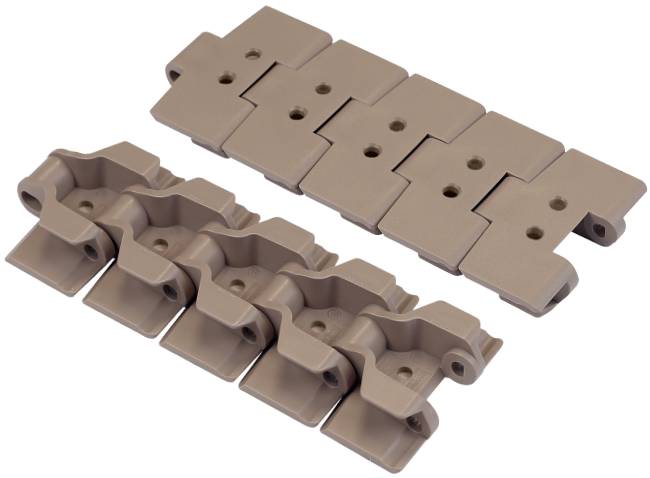

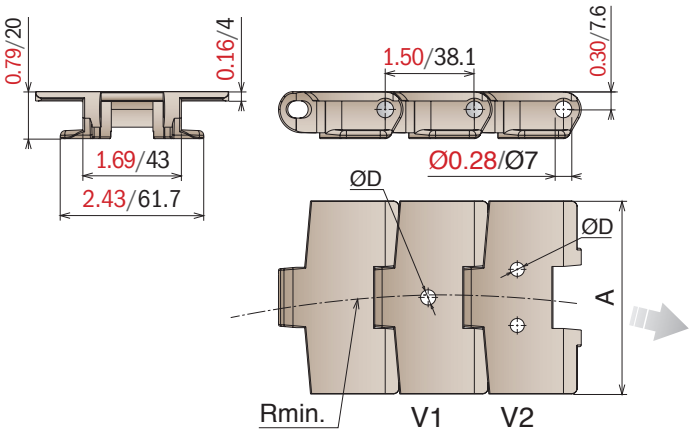

Tab System

10 feet 3.048 m | 80 links | pg. 86-87 | pg. 102/104 | pg. 380->386

Article-Nr.	Ref.	A (Plate Width) in-mm	R in-mm	Weight lbs/ft-kg/m	D in-mm	Max working load (lbs/N)	Material
11560102	LF 880 V1 K325	3.25/82,5	19.68/500	0.68/1,015	0.26/6,5	495/2200	LF
11570102	LF 880 V2 K325	3.25/82,5	18.00/457	0.68/1,015			
11570105	LF 880 V2 K450	4.50/114,3	18.00/457	0.73/1,09			

880 TAB *Plastic pin*

Sideflexing chain with plastic pin

Pins: Plastic | **Backflex radius min.:** 1.57 in/40 mm

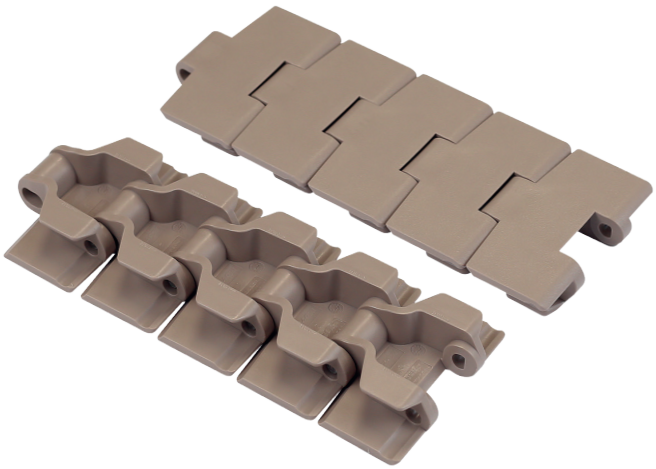

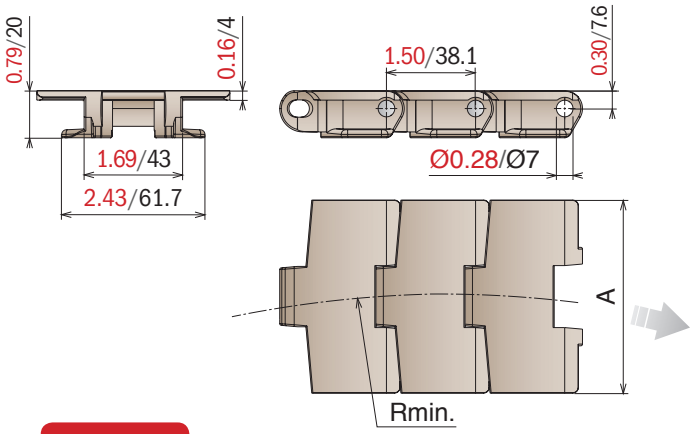

New

Tab System

10 feet 3.048 m | 80 links | pg. 86-87 | pg. 102/104 | pg. 380->386

Article-Nr.	Ref.	A (Plate Width) in-mm	R in-mm	Weight lbs/ft-kg/m	Max working load (lbs/N)	Material
11660102	LF 880 TAB K325	3.25/82,5	19.68/500	0.68/1,015	125/550	LF
11660105	LF 880 TAB K450	4.50/114,3	18.00/457	0.59/0,89		

880 B

Sideflexing chain

Pins: Stainless Steel | **Backflex radius min.:** 1.57 in/40 mm

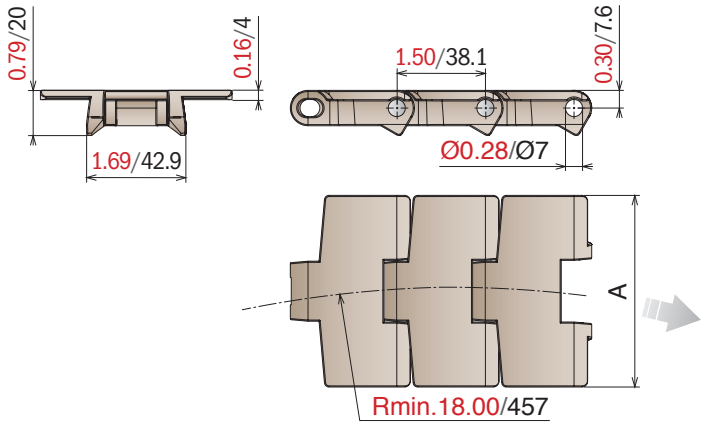

Bevel System

10 feet 3.048 m | 80 links | pg. 86-87 | pg. 103 | pg. 380->386

Article-Nr.	Ref.	A (Plate Width) in-mm	R in-mm	Weight lbs/ft-kg/m	Max working load (lbs/N)	Material
11120102	LF 880 B K325	3.25/82,5	18.00/457	0.60/0,89	495/2200	LF
11120104	LF 880 B K350	3.50/88,9	18.00/457	0.62/0,93		
11120105	LF 880 B K450	4.50/114,3	18.00/457	0.70/1,05		
11120302	MX 880 B K325	3.25/82,5	18.00/457	0.60/0,89	395/1750	MX
11120304	MX 880 B K350	3.50/88,9	18.00/457	0.62/0,93		
11120305	MX 880 B K450	4.50/114,3	18.00/457	0.70/1,05		

880 TAB BO

Sideflexing chain

Pins: Stainless Steel | **Backflex radius min.:** 1.57 in/40 mm

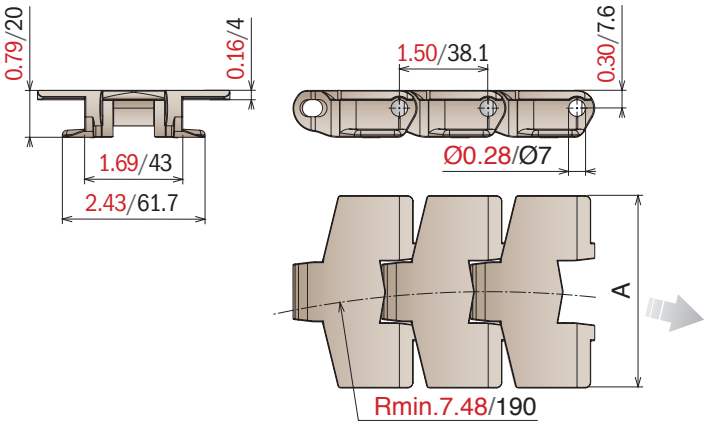

Tab System

10 feet 3.048 m | 80 links | pg. 86-87 | pg.102/104 | pg. 380->386

Article-Nr.	Ref.	A (Plate Width) in-mm	R in-mm	Weight lbs/ft-kg/m	Max working load (lbs/N)	Material
11260102	LF 880 TAB BO K325	3.25/82,5	7.48/190	0.64/0,96	378/1680	LF
11260105	LF 880 TAB BO K450	4.50/114,3	7.48/190	0.74/1,10		
11260302	MX 880 TAB BO K325	3.25/82,5	7.48/190	0.64/0,96	305/1350	MX
11260305	MX 880 TAB BO K450	4.50/114,3	7.48/190	0.74/1,10		

882 M

Sideflexing chain

Pins: Stainless Steel | **Backflex radius min.:** 1.97 in/50 mm

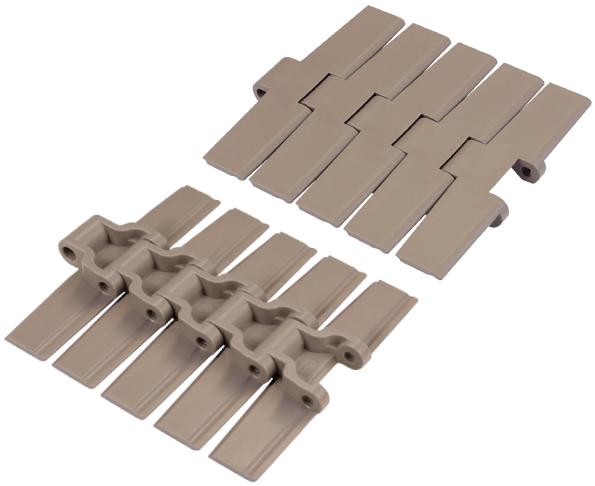

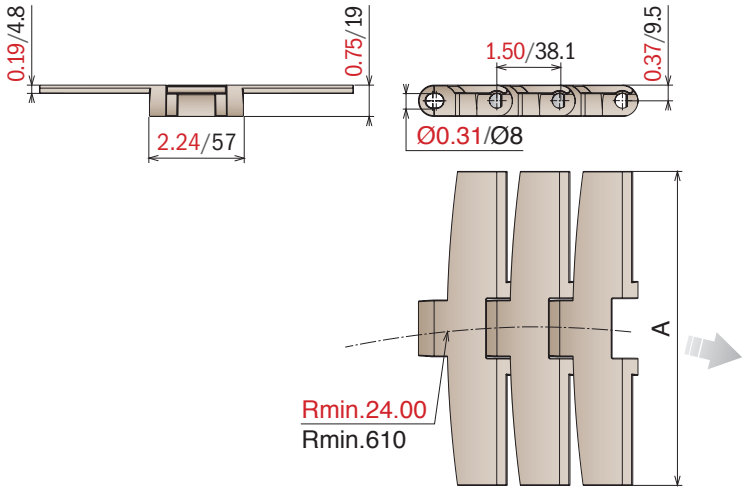

Magnetic System

10 feet 3.048 m | 80 links | pg. 88-89/100 | pg. 380->386

Article-Nr.	Ref.	A (Plate Width) in-mm	Weight lbs/ft-kg/m	Max working load (lbs/N)	Material
11130107	LF 882 M K750	7.50/190,5	1.43/2,14	861/3830	LF
11130108	LF 882 M K1000	10.00/254,0	1.64/2,45		
11130109	LF 882 M K1200	12.00/304,8	1.79/2,68		
11130307	MX 882 M K750	7.50/190,5	1.43/2,14	685/3050	MX
11130308	MX 882 M K1000	10.00/254,0	1.64/2,45		
11130309	MX 882 M K1200	12.00/304,8	1.79/2,68		
11131307	MP 882 M K750	7.50/190,5	1.43/2,14	861/3830	MP
11131308	MP 882 M K1000	10.00/254,0	1.64/2,45		
11131309	MP 882 M K1200	12.00/304,8	1.79/2,68		
11131607	DKM 882 M K750	7.50/190,5	1.43/2,14	861/3830	DKM
11131608	DKM 882 M K1000	10.00/254,0	1.64/2,45		
11131609	DKM 882 M K1200	12.00/304,8	1.79/2,68		
11131707	MWX 882 M K750	7.50/190,5	1.43/2,14	861/3830	MWX
11131708	MWX 882 M K1000	10.00/254,0	1.64/2,45		
11131709	MWX 882 M K1200	12.00/304,8	1.79/2,68		

882 M GT

Sideflexing chain

Pins: Stainless Steel | **Backflex radius min.:** 1.97 in/50 mm | **TPE Rubber:** 75 ShA

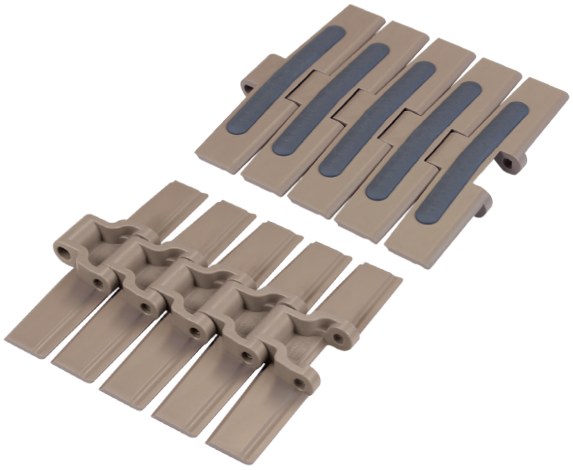

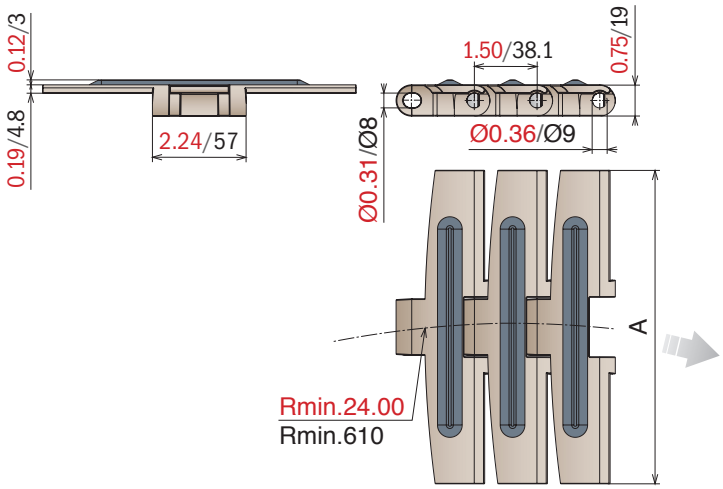

Magnetic System

10 feet 3.048 m
80 links

pg. 88-89/100

pg. 380->386

Article-Nr.	Ref.	A (Plate Width) in-mm	Weight lbs/ft-kg/m	Max working load (lbs/N)	Material
11150107	LF 882 M GT K750	7.50/190,5	1.41/2,10	861/3830	LF
11150108	LF 882 M GT K1000	10.00/254,0	1.64/2,45		
11150109	LF 882 M GT K1200	12.00/304,8	1.83/2,74		
11150307	MX 882 M GT K750	7.50/190,5	1.41/2,10	685/3050	MX
11150308	MX 882 M GT K1000	10.00/254,0	1.64/2,45		
11150309	MX 882 M GT K1200	12.00/304,8	1.83/2,74		

882 M LBP

Sideflexing chain

Pins: Stainless Steel | **Backflex radius min.:** 5.90 in/150 mm

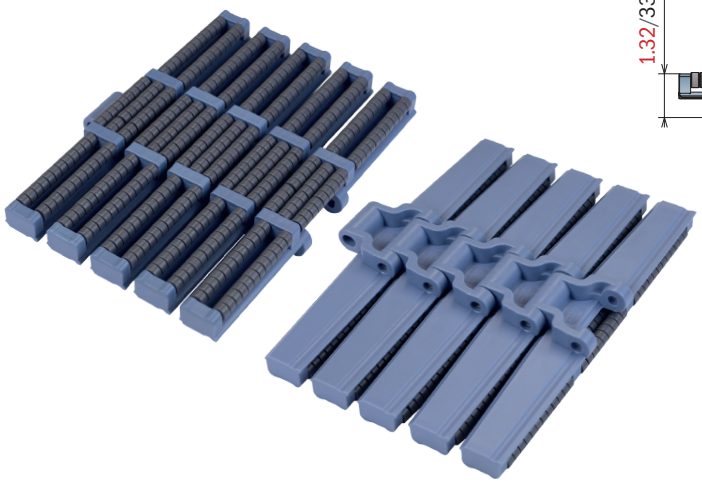

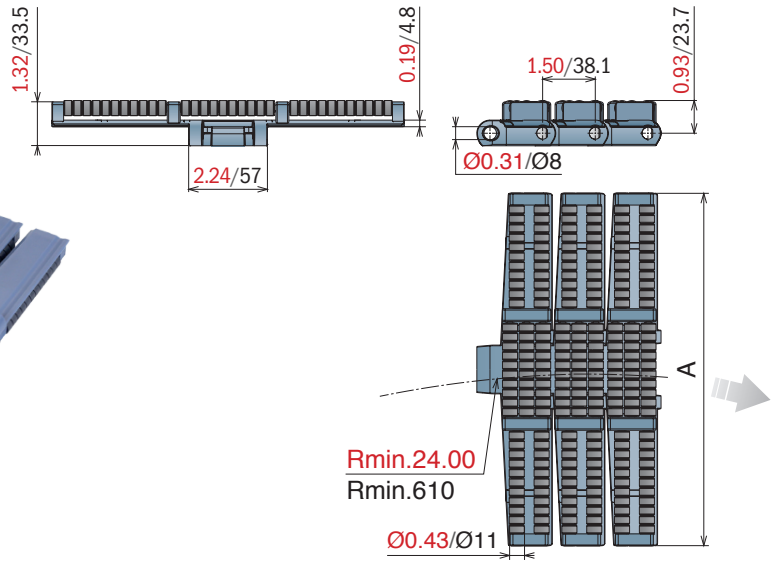

Magnetic System

5 feet
1.524 m
40 links

pg. 88-89/100

pg. 380->386

Article-Nr.	Ref.	A (Plate Width) in-mm	Weight lbs/ft-kg/m	Max working load (lbs/N)	Material
11170107	LFA 882 M LBP K750	7.50/190,5	2.63/3,92	861/3830	LFA
11170108	LFA 882 M LBP K1000	10.00/254,0	3.31/4,94		
11170109	LFA 882 M LBP K1200	12.00/304,8	3.90/5,82		

882 TAB

Sideflexing chain

Pins: Stainless Steel | **Backflex radius min.:** 1.57 in/40 mm

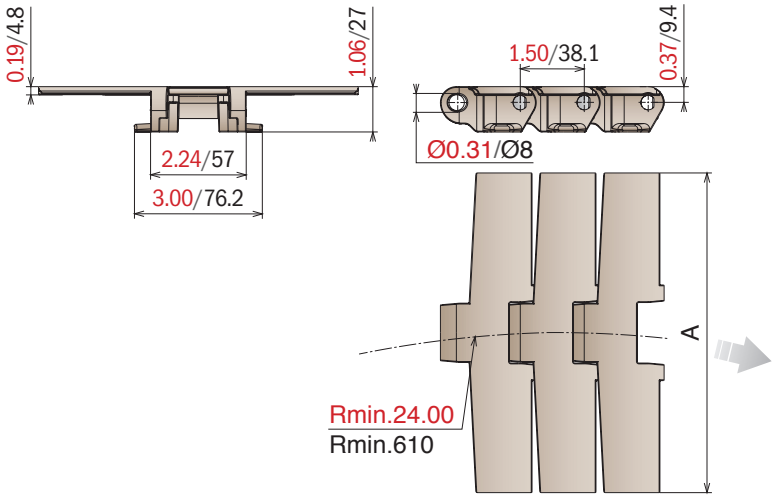

Tab System

10 feet 3.048 m | 80 links | pg. 88-89 | pg. 102/104 | pg. 380->386

Article-Nr.	Ref.	A (Plate Width) in-mm	Weight lbs/ft-kg/m	Max working load (lbs/N)	Material
11140105	LF 882 TAB K450	4.50/114,3	1.37/2,05	861/3830	LF
11140106	LF 882 TAB K600	6.00/152,4	1.48/2,20		
11140107	LF 882 TAB K750	7.50/190,5	1.64/2,45		
11140108	LF 882 TAB K1000	10.00/254,0	1.91/2,85		
11140109	LF 882 TAB K1200	12.00/304,8	2.28/3,40		
11140305	MX 882 TAB K450	4.50/114,3	1.37/2,05	685/3050	MX
11140306	MX 882 TAB K600	6.00/152,4	1.48/2,20		
11140307	MX 882 TAB K750	7.50/190,5	1.64/2,45		
11140308	MX 882 TAB K1000	10.00/254,0	1.91/2,85		
11140309	MX 882 TAB K1200	12.00/304,8	2.28/3,40		
11141305	MP 882 TAB K450	4.50/114,3	1.37/2,05	861/3830	MP
11141306	MP 882 TAB K600	6.00/152,4	1.48/2,20		
11141307	MP 882 TAB K750	7.50/190,5	1.64/2,45		
11141308	MP 882 TAB K1000	10.00/254,0	1.91/2,85		
11141309	MP 882 TAB K1200	12.00/304,8	2.28/3,40		
11141605	DKM 882 TAB K450	4.50/114,3	1.37/2,05	861/3830	DKM
11141606	DKM 882 TAB K600	6.00/152,4	1.48/2,20		
11141607	DKM 882 TAB K750	7.50/190,5	1.64/2,45		
11141608	DKM 882 TAB K1000	10.00/254,0	1.91/2,85		
11141609	DKM 882 TAB K1200	12.00/304,8	2.28/3,40		
11141705	MWX 882 TAB K450	4.50/114,3	1.37/2,05	861/3830	MWX
11141706	MWX 882 TAB K600	6.00/152,4	1.48/2,20		
11141707	MWX 882 TAB K750	7.50/190,5	1.64/2,45		
11141708	MWX 882 TAB K1000	10.00/254,0	1.91/2,85		
11141709	MWX 882 TAB K1200	12.00/304,8	2.28/3,40		

882 TAB GT

Sideflexing chain

Pins: Stainless Steel | **Backflex radius min.:** 1.57 in/40 mm | **TPE Rubber:** 75 ShA

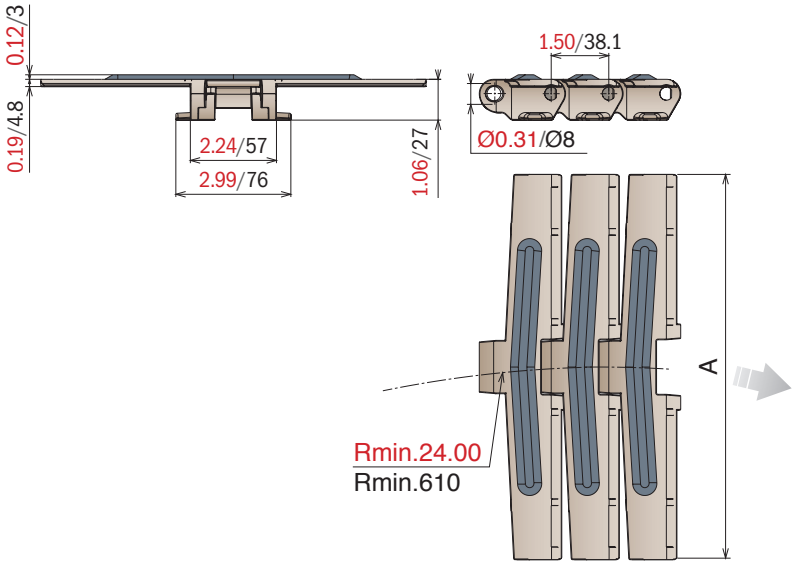

Tab System

10 feet 3.048 m | 80 links | pg. 88-89 | pg. 102/104 | pg. 380->386

Article-Nr.	Ref.	A (Plate Width) in-mm	Weight lbs/ft-kg/m	Max working load (lbs/N)	Material
11160107	LF 882 TAB GT K750	7.50/190,5	1.56/2,37	861/3830	LF
11160108	LF 882 TAB GT K1000	10.00/254,0	1.79/2,67		
11160109	LF 882 TAB GT K1200	12.00/304,8	1.96/2,92		
11160307	MX 882 TAB GT K750	7.50/190,5	1.56/2,37	685/3050	MX
11160308	MX 882 TAB GT K1000	10.00/254,0	1.79/2,67		
11160309	MX 882 TAB GT K1200	12.00/304,8	1.96/2,92		

882 TAB LBP

Sideflexing chain

Pins: Stainless Steel | **Backflex radius min.:** 5.90 in/150 mm

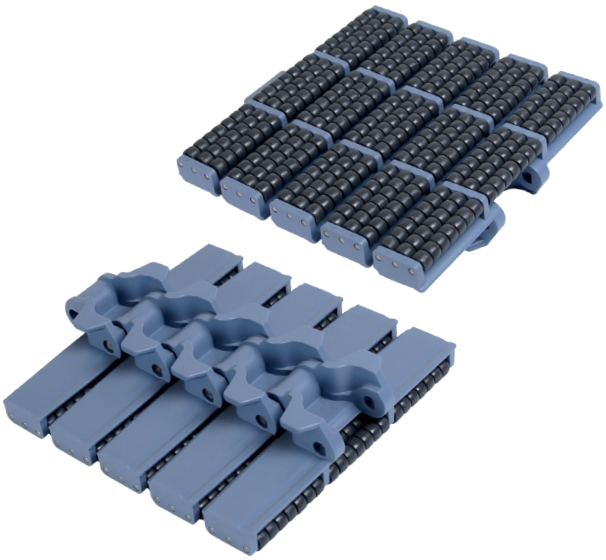

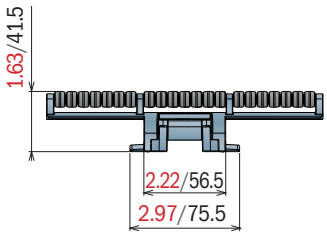

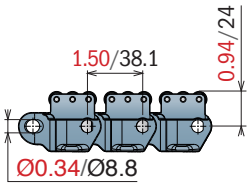

K450

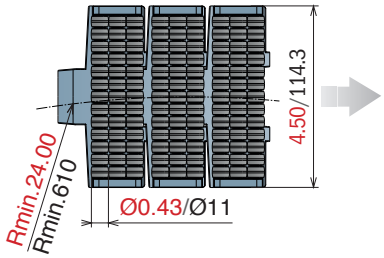

K750

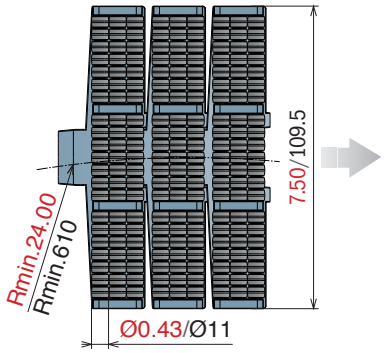

K1000

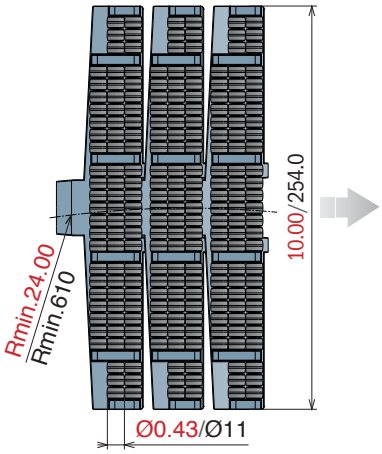

K1200

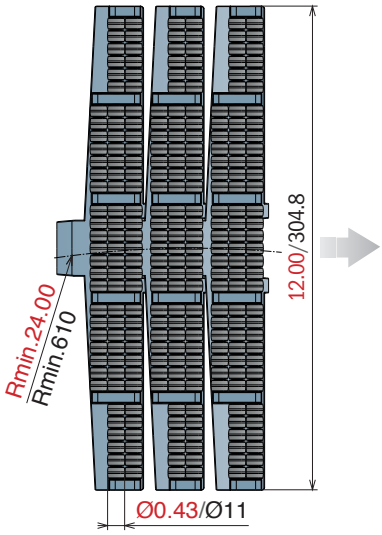

Tab System

5 feet 1.524 m			
40 links	pg. 88-89	pg. 102/104	pg. 380->386

Article-Nr.	Ref.	A (Plate Width) in-mm	Weight lbs/ft-kg/m	Max working load (lbs/N)	Material
11180105	LFA 882 TAB LBP K450	4.50/114,3	2.69/4,00	861/3830	LFA
11180107	LFA 882 TAB LBP K750	7.50/190,5	3.15/4,70		
11180108	LFA 882 TAB LBP K1000	10.00/254,0	3.99/5,95		
11180109	LFA 882 TAB LBP K1200	12.00/304,8	4.39/6,55		

1873 *Sideflexing chain*

The stainless steel version is supplied with LONG-LIFE SS roller chain.

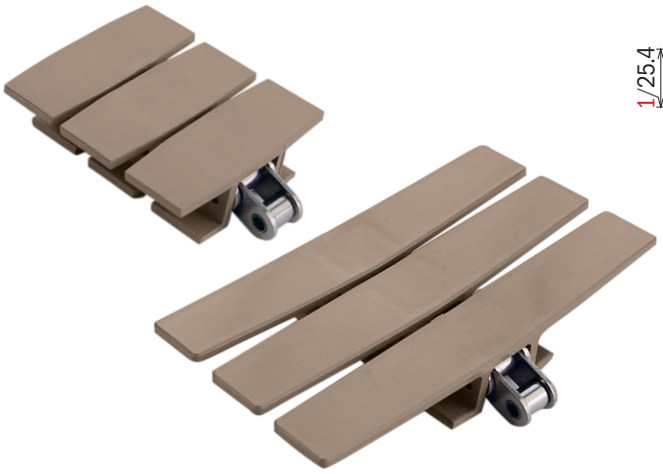

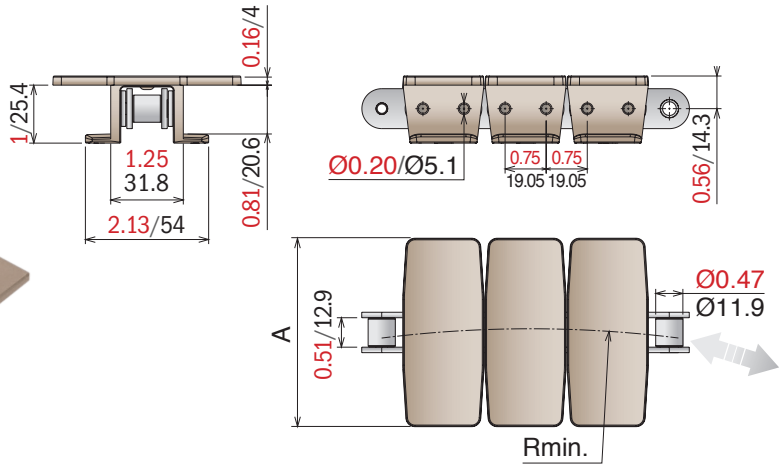

Standard lenght roller chain: 160 Pitches

Tab System

10 feet 3.048 m
80 flights

SPROCKET
ASA 60
Standard on market

pg. 102/104

pg. 380->386

Article-Nr.	Chain	Ref.	A (Plate Width) in-mm	R in-mm	Weight lbs/ft-kg/m	Max working load (lbs/N)	Backflex radius min. in-mm	Material
11590102	C45	LF 1873 TAB K325	3.25/82,5	14.00/355	1.41/2,10	1010/4500	7.08/180	LF
11600102	Stainless Steel		3.25/82,5	14.00/355	1.41/2,10	787/3500		
11590105	C45	LF 1873 TAB K450	4.50/114,3	14.00/355	1.54/2,30	1010/4500		
11600105	Stainless Steel		4.50/114,3	14.00/355	1.54/2,30	787/3500		
11590106	C45	LF 1873 TAB K600	6.00/152,4	18.00/457	1.61/2,40	1010/4500		
11600106	Stainless Steel		6.00/152,4	18.00/457	1.61/2,40	787/3500		
11590107	C45	LF 1873 TAB K750	7.50/190,5	18.00/457	1.75/2,60	1010/4500		
11600107	Stainless Steel		7.50/190,5	18.00/457	1.75/2,60	787/3500		
11590108	C45	LF 1873 TAB K1000	10.00/254,0	18.00/457	1.88/2,80	1010/4500		
11600108	Stainless Steel		10.00/254,0	18.00/457	1.88/2,80	787/3500		
11590109	C45	LF 1873 TAB K1200	12.00/304,8	18.00/457	2.01/3,00	1010/4500		
11600109	Stainless Steel		12.00/304,8	18.00/457	2.01/3,00	787/3500		
11590302	C45	MX 1873 TAB K325	3.25/82,5	14.00/355	1.41/2,10	1010/4500	7.08/180	MX
11600302	Stainless Steel		3.25/82,5	14.00/355	1.41/2,10	787/3500		
11590305	C45	MX 1873 TAB K450	4.50/114,3	14.00/355	1.54/2,30	1010/4500		
11600305	Stainless Steel		4.50/114,3	14.00/355	1.54/2,30	787/3500		
11590306	C45	MX 1873 TAB K600	6.00/152,4	18.00/457	1.61/2,40	1010/4500		
11600306	Stainless Steel		6.00/152,4	18.00/457	1.61/2,40	787/3500		
11590307	C45	MX 1873 TAB K750	7.50/190,5	18.00/457	1.75/2,60	1010/4500		
11600307	Stainless Steel		7.50/190,5	18.00/457	1.75/2,60	787/3500		
11590308	C45	MX 1873 TAB K1000	10.00/254,0	18.00/457	1.88/2,80	1010/4500		
11600308	Stainless Steel		10.00/254,0	18.00/457	1.88/2,80	787/3500		
11590309	C45	MX 1873 TAB K1200	12.00/304,8	18.00/457	2.01/3,00	1010/4500		
11600309	Stainless Steel		12.00/304,8	18.00/457	2.01/3,00	787/3500		

1873 GT

Sideflexing chain

The stainless steel version is supplied with LONG-LIFE SS roller chain. | **TPE Rubber:** 75 ShA

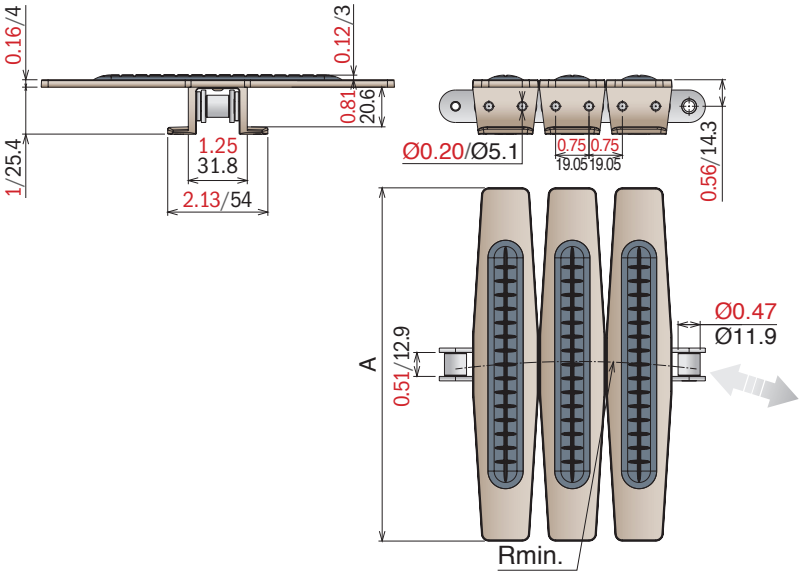

Standard lenght roller chain: 160 Pitches

Tab System

10 feet 3.048 m
80 flights

SPROCKET
ASA 60
Standard on market

pg. 102/104

pg. 380->386

Article-Nr.	Chain	Ref.	A (Plate Width) in-mm	Weight lbs/ft-kg/m	Max working load (lbs/N)	Sideflex radius min. in-mm	Material
11610107	C45	LF 1873 GT TAB K750	7.50/190,5	1.75/2,60	1010/4500	18.00/457	LF
11620107	Stainless Steel		7.50/190,5	1.75/2,60	787/3500		
11610108	C45	LF 1873 GT TAB K1000	10.00/254,0	1.88/2,80	1010/4500		
11620108	Stainless Steel		10.00/254,0	1.88/2,80	787/3500		
11610109	C45	LF 1873 GT TAB K1200	12.00/304,8	2.01/3,00	1010/4500	18.00/457	
11620109	Stainless Steel		12.00/304,8	2.01/3,00	787/3500		
11610307	C45	MX 1873 GT TAB K750	7.50/190,5	1.75/2,60	1010/4500	18.00/457	MX
11620307	Stainless Steel		7.50/190,5	1.75/2,60	787/3500		
11610308	C45	MX 1873 GT TAB K1000	10.00/254,0	1.88/2,80	1010/4500		
11620308	Stainless Steel		10.00/254,0	1.88/2,80	787/3500		
11610309	C45	MX 1873 GT TAB K1200	12.00/304,8	2.01/3,00	1010/4500	18.00/457	
11620309	Stainless Steel		12.00/304,8	2.01/3,00	787/3500		

1873 GRIPPER GS1

Sideflexing chain

The stainless steel version is supplied with LONG-LIFE SS roller chain.

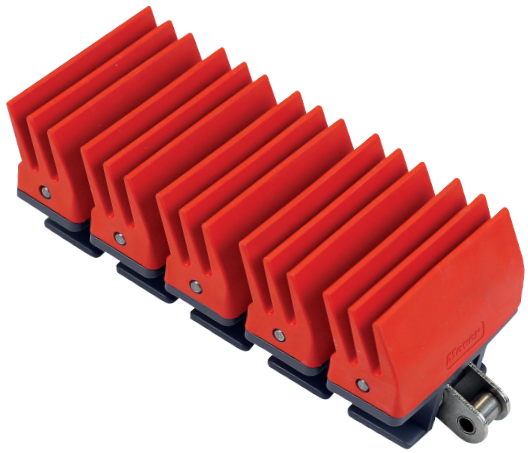

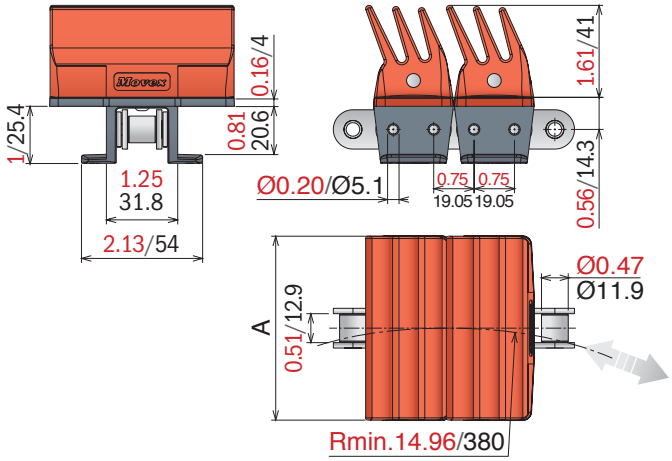

Standard lenght roller chain: 160 Pitches

Tab System

10 feet 3.048 m
80 flights

SPROCKET
ASA 60
Standard on market

pg. 102/104

pg. 380->386

Article-Nr.	Chain	Ref.	A (Width) in-mm	Max working load (lbs/N)	Weight lbs/ft-kg/m	Rubber	Material
11200102	C45	1873 TAB K325 GR	3.25/82,5	1010/4500	2.92/4,354	TPR	LFD
11200105		1873 TAB K450 GR	4.50/114,3				
11200202	Nickel Plated Steel	1873 NP TAB K325 GR	3.25/82,5	787/3500			
11200205		1873 NP TAB K450 GR	4.50/114,3				
11200302	Stainless Steel	1873 SS TAB K325 GR	3.25/82,5	787/3500			
11200305		1873 SS TAB K450 GR	4.50/114,3				
11320102	C45	1873 TAB K325 GR	3.25/82,5	1010/4500	2.92/4,354	TPR	MX
11320105		1873 TAB K450 GR	4.50/114,3				
11320202	Nickel Plated Steel	1873 NP TAB K325 GR	3.25/82,5	787/3500			
11320205		1873 NP TAB K450 GR	4.50/114,3				
11320302	Stainless Steel	1873 SS TAB K325 GR	3.25/82,5	787/3500			
11320305		1873 SS TAB K450 GR	4.50/114,3				
11210102	C45	1873 TAB K325 GR	3.25/82,5	1010/4500	2.92/4,354	EPDM-PP	PP
11210105		1873 TAB K450 GR	4.50/114,3				
11210202	Nickel Plated Steel	1873 NP TAB K325 GR	3.25/82,5	787/3500			
11210205		1873 NP TAB K450 GR	4.50/114,3				
11210302	Stainless Steel	1873 SS TAB K325 GR	3.25/82,5	787/3500			
11210305		1873 SS TAB K450 GR	4.50/114,3				
11330102	C45	1873 TAB K325 GR	3.25/82,5	1010/4500	2.92/4,354	TPR	MWX
11330105		1873 TAB K450 GR	4.50/114,3				
11330202	Nickel Plated Steel	1873 NP TAB K325 GR	3.25/82,5	787/3500			
11330205		1873 NP TAB K450 GR	4.50/114,3				
11330302	Stainless Steel	1873 SS TAB K325 GR	3.25/82,5	787/3500			
11330305		1873 SS TAB K450 GR	4.50/114,3				

1873 GRIPPER GS2

Sideflexing chain

The stainless steel version is supplied with LONG-LIFE SS roller chain.

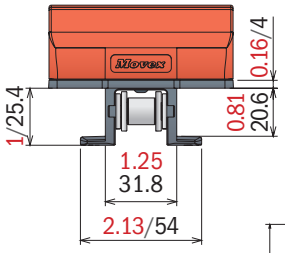

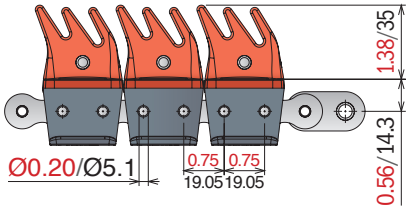

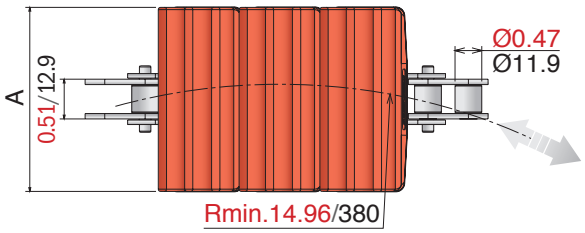

Standard lenght roller chain: 160 Pitches

Tab System

10 feet 3.048 m
80 flights

SPROCKET
ASA 60
Standard on market

pg. 102/104

pg. 380->386

Article-Nr.	Chain	Ref.	A (Width) in-mm	Max working load (lbs/N)	Weight lbs/ft-kg/m	Rubber	Material
11280102	C45	1873 TAB K325 GR	3.25/82,5	1010/4500	2.92/4,354	TPR	LFD
11280105		1873 TAB K450 GR	4.50/114,3				
11280202	Nickel Plated Steel	1873 NP TAB K325 GR	3.25/82,5	787/3500			
11280205		1873 NP TAB K450 GR	4.50/114,3				
11280302	Stainless Steel	1873 SS TAB K325 GR	3.25/82,5	787/3500			
11280305		1873 SS TAB K450 GR	4.50/114,3				
11340102	C45	1873 TAB K325 GR	3.25/82,5	1010/4500	2.92/4,354	TPR	MX
11340105		1873 TAB K450 GR	4.50/114,3				
11340202	Nickel Plated Steel	1873 NP TAB K325 GR	3.25/82,5	787/3500			
11340205		1873 NP TAB K450 GR	4.50/114,3				
11340302	Stainless Steel	1873 SS TAB K325 GR	3.25/82,5	787/3500			
11340305		1873 SS TAB K450 GR	4.50/114,3				
11290102	C45	1873 TAB K325 GR	3.25/82,5	1010/4500	2.92/4,354	EPDM-PP	PP
11290105		1873 TAB K450 GR	4.50/114,3				
11290202	Nickel Plated Steel	1873 NP TAB K325 GR	3.25/82,5	787/3500			
11290205		1873 NP TAB K450 GR	4.50/114,3				
11290302	Stainless Steel	1873 SS TAB K325 GR	3.25/82,5	787/3500			
11290305		1873 SS TAB K450 GR	4.50/114,3				
11350102	C45	1873 TAB K325 GR	3.25/82,5	1010/4500	2.92/4,354	TPR	MWX
11350105		1873 TAB K450 GR	4.50/114,3				
11350202	Nickel Plated Steel	1873 NP TAB K325 GR	3.25/82,5	787/3500			
11350205		1873 NP TAB K450 GR	4.50/114,3				
11350302	Stainless Steel	1873 SS TAB K325 GR	3.25/82,5	787/3500			
11350305		1873 SS TAB K450 GR	4.50/114,3				

1873 GRIPPER GS4

Sideflexing chain

The stainless steel version is supplied with LONG-LIFE SS roller chain.

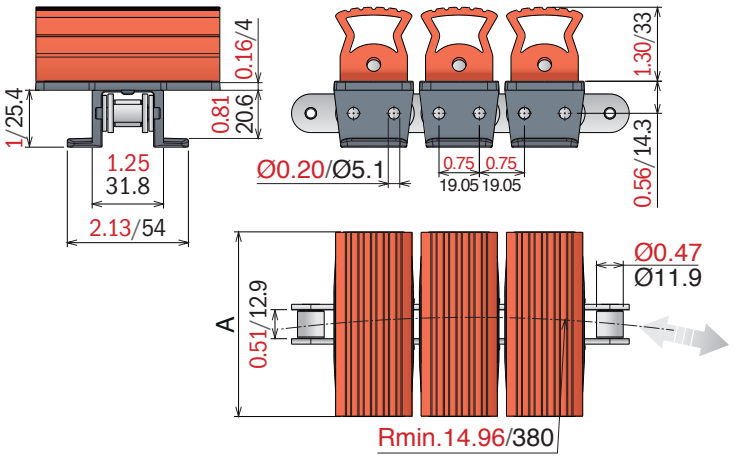

Standard lenght roller chain: 160 Pitches

New

Tab System

10 feet 3.048 m
80 flights

SPROCKET
ASA 60
Standard on market

pg. 102/104

pg. 380->386

Article-Nr.	Chain	Ref.	A (Width) in-mm	Max working load (lbs/N)	Weight lbs/ft-kg/m	Rubber	Material
11830102	C45	1873 TAB K325 GR	3.25/82,5	1010/4500	2.78/4,15	TPR	LFD
11830105		1873 TAB K450 GR	4.50/114,3				
11830202	Nickel Plated Steel	1873 NP TAB K325 GR	3.25/82,5	787/3500			
11830205		1873 NP TAB K450 GR	4.50/114,3				
11830302	Stainless Steel	1873 SS TAB K325 GR	3.25/82,5	787/3500			
11830305		1873 SS TAB K450 GR	4.50/114,3				
11840102	C45	1873 TAB K325 GR	3.25/82,5	1010/4500	2.78/4,15	TPR	MX
11840105		1873 TAB K450 GR	4.50/114,3				
11840202	Nickel Plated Steel	1873 NP TAB K325 GR	3.25/82,5	787/3500			
11840205		1873 NP TAB K450 GR	4.50/114,3				
11840302	Stainless Steel	1873 SS TAB K325 GR	3.25/82,5	787/3500			
11840305		1873 SS TAB K450 GR	4.50/114,3				
11850102	C45	1873 TAB K325 GR	3.25/82,5	1010/4500	2.78/4,15	EPDM-PP	PP
11850105		1873 TAB K450 GR	4.50/114,3				
11850202	Nickel Plated Steel	1873 NP TAB K325 GR	3.25/82,5	787/3500			
11850205		1873 NP TAB K450 GR	4.50/114,3				
11850302	Stainless Steel	1873 SS TAB K325 GR	3.25/82,5	787/3500			
11850305		1873 SS TAB K450 GR	4.50/114,3				
11860102	C45	1873 TAB K325 GR	3.25/82,5	1010/4500	2.78/4,15	TPR	MWX
11860105		1873 TAB K450 GR	4.50/114,3				
11860202	Nickel Plated Steel	1873 NP TAB K325 GR	3.25/82,5	787/3500			
11860205		1873 NP TAB K450 GR	4.50/114,3				
11860302	Stainless Steel	1873 SS TAB K325 GR	3.25/82,5	787/3500			
11860305		1873 SS TAB K450 GR	4.50/114,3				

1873 D-SHAPE

Sideflexing chain

The stainless steel version is supplied with LONG-LIFE SS roller chain.

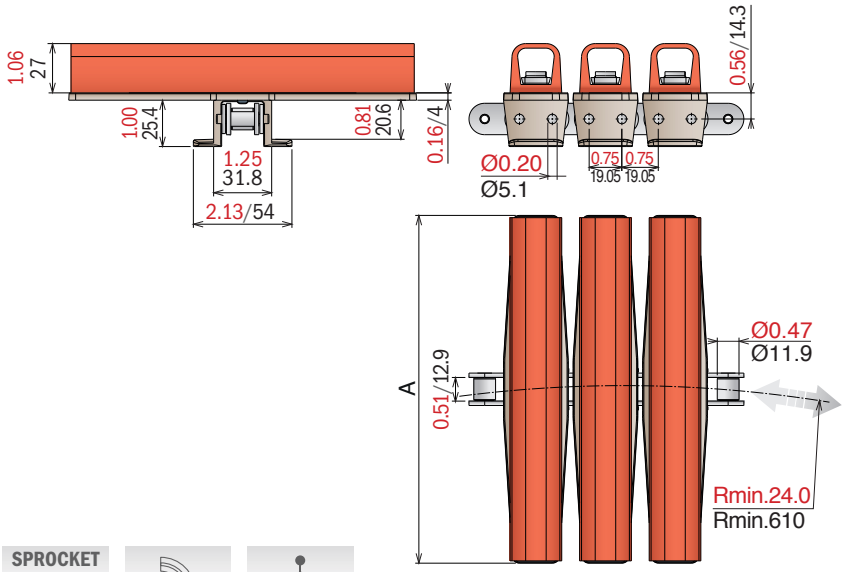

New **Tab System**

10 feet 3.048 m
80 flights

SPROCKET
ASA 60
Standard on market

pg. 102/104

pg. 380->386

Standard lenght roller chain: 160 Pitches

Article-Nr.	Chain	Ref.	A (Width) in-mm	Weight lbs/ft-kg/m	Max working load (lbs/N)	Rubber	Material
11870106	C45	1873 TAB K600 D	6.00/152,4	2.68/4,00	1010/4500	TPR	LF
11870107		1873 TAB K750 D	7.50/190,5	3.28/4,90			
11870206	Nickel Plated Steel	1873 NP TAB K600 D	6.00/152,4	2.68/4,00	787/3500		
11870207		1873 NP TAB K750 D	7.50/190,5	3.28/4,90			
11870306	Stainless Steel	1873 SS TAB K600 D	6.00/152,4	2.68/4,00	787/3500		
11870307		1873 SS TAB K750 D	7.50/190,5	3.28/4,90			
11880106	C45	1873 TAB K600 D	6.00/152,4	2.68/4,00	1010/4500	TPR	MX
11880107		1873 TAB K750 D	7.50/190,5	3.28/4,90			
11880206	Nickel Plated Steel	1873 NP TAB K600 D	6.00/152,4	2.68/4,00	787/3500		
11880207		1873 NP TAB K750 D	7.50/190,5	3.28/4,90			
11880306	Stainless Steel	1873 SS TAB K600 D	6.00/152,4	2.68/4,00	787/3500		
11880307		1873 SS TAB K750 D	7.50/190,5	3.28/4,90			
11890106	C45	1873 TAB K600 D	6.00/152,4	2.68/4,00	1010/4500	EPDM-PP	MPX
11890107		1873 TAB K750 D	7.50/190,5	3.28/4,90			
11890206	Nickel Plated Steel	1873 NP TAB K600 D	6.00/152,4	2.68/4,00	787/3500		
11890207		1873 NP TAB K750 D	7.50/190,5	3.28/4,90			
11890306	Stainless Steel	1873 SS TAB K600 D	6.00/152,4	2.68/4,00	787/3500		
11890307		1873 SS TAB K750 D	7.50/190,5	3.28/4,90			

1873 MX1

Sideflexing chain

The stainless steel version is supplied with LONG-LIFE SS roller chain. | **TPR Rubber:** 75 ShA

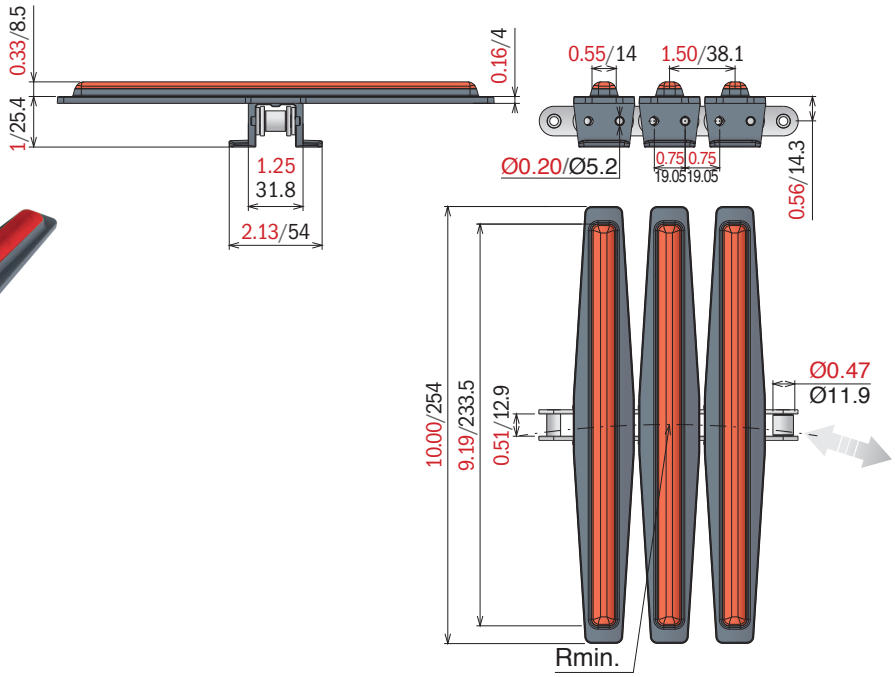

Standard lenght roller chain: 160 Pitches

Tab System

10 feet 3.048 m
80 flights

SPROCKET
ASA 60
Standard on market

pg. 102/104

pg. 380->386

Article-Nr.	Chain	Ref.	A (Plate Width) in-mm	Weight lbs/ft-kg/m	Max working load (lbs/N)	Sideflex radius min. in-mm	Material
11790108	C45	1873 LF TAB K1000	10.00/254,0	1.88/2,80	1010/4500	18.00/457	LF
11780108	Nickel Plated Steel				787/3500		
11690108	Stainless Steel				787/3500		
11790308	C45	1873 MX1 TAB K1000	10.00/254,0	1.88/2,80	1010/4500	18.00/457	MX
11780308	Nickel Plated Steel				787/3500		
11690308	Stainless Steel				787/3500		

1873 MX1

+ *ExtraInfo*

Chain for hot-fill applications, neck & cap sterilizing.

+ Care

Designed to keep the products in the correct position during the twist movement.

+ Long life roller chain

Special hardened pins and bushing guarantee a longer lifetime. Chain can twist 90° in 1500 mm.

+ Temperature resistance

The rubber is developed for and perfectly resistant against the higher temperatures of the hot-filled products.

+ Product stability

The new developed design guarantees a perfect connection between rubber and plate.

1873 MX2

Sideflexing chain

The stainless steel version is supplied with LONG-LIFE SS roller chain. | **TPR Rubber:** 75 ShA

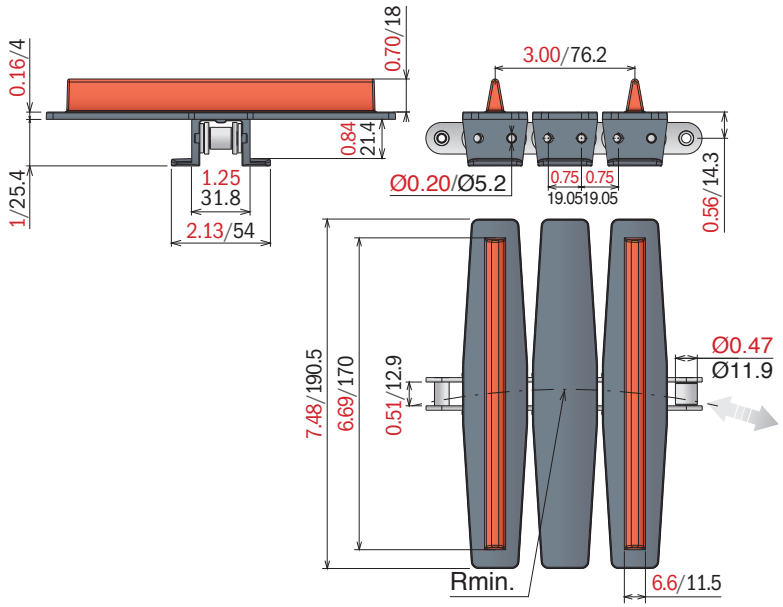

Standard lenght roller chain: 160 Pitches

Tab System

10 feet 3.048 m
80 flights

SPROCKET
ASA 60
Standard on market

pg. 102/104

pg. 380->386

Article-Nr.	Chain	Ref.	A (Plate Width) in-mm	Weight lbs/ft-kg/m	Max working load (lbs/N)	Sideflex radius min. in-mm	Material
11770107	C45	1873 LF TAB K750	7.50/190,5	1.75/2,60	1010/4500	18.00/457	LF
11760107	Nickel Plated Steel				787/3500		
11670107	Stainless Steel				787/3500		
11770307	C45	1873 MX2 TAB K750	7.50/190,5	1.75/2,60	1010/4500	18.00/457	MX
11760307	Nickel Plated Steel				787/3500		
11670307	Stainless Steel				787/3500		

1873 MX1

Chain for twisting cans.

+ *ExtraInfo*

+ Care
Designed to twist cans without pressure.

+ Product stability
The flights assure the position of the cans also at higher speed.

+ Temperature resistance
Materials are suitable for use at high temperatures.

+ Long life roller chain
Special hardened pins and bushing guarantee
a longer lifetime. Chain can twist 90° in 1500 mm.

878 GRIPPER GS1

Sideflexing chain

New

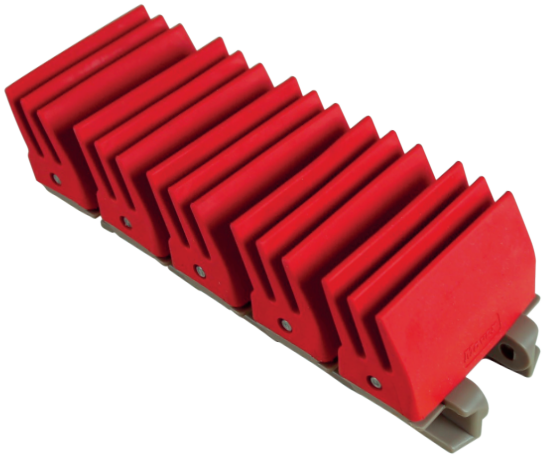

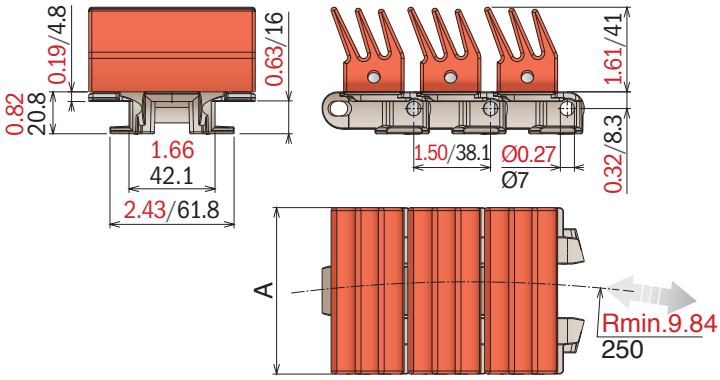

Tab System

10 feet 3.048 m | 80 links | pg. 86-87 | pg. 102/104 | pg. 380->386

Article-Nr.	Ref.	A (Plate Width) in-mm	R in-mm	Weight lbs/ft-kg/m	Max working load (lbs/N)	Rubber	Material
11800102	LF 878 GS1 K325	3.25/82,5	9.84/250	3.12/4,65	495/2200	TPR	LF

878 GRIPPER GS2

Sideflexing chain

New

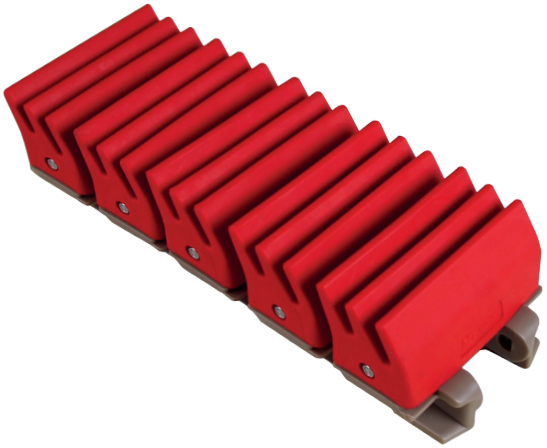

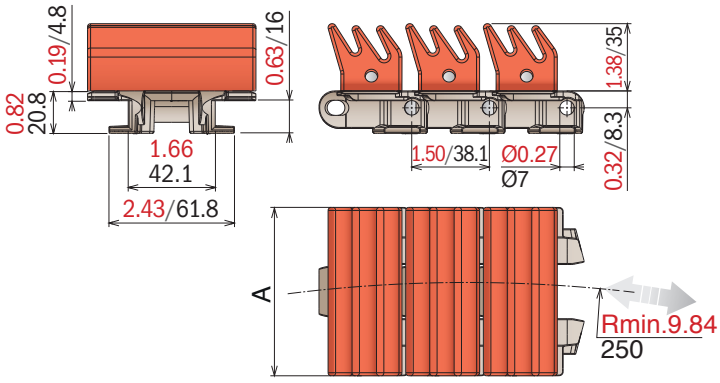

Tab System

10 feet 3.048 m | 80 links | pg. 86-87 | pg. 102/104 | pg. 380->386

Article-Nr.	Ref.	A (Plate Width) in-mm	R in-mm	Weight lbs/ft-kg/m	Max working load (lbs/N)	Rubber	Material
11810102	LF 878 GS2 K325	3.25/82,5	9.84/250	2.72/4,05	495/2200	TPR	LF

878 GRIPPER GS4

Sideflexing chain

New

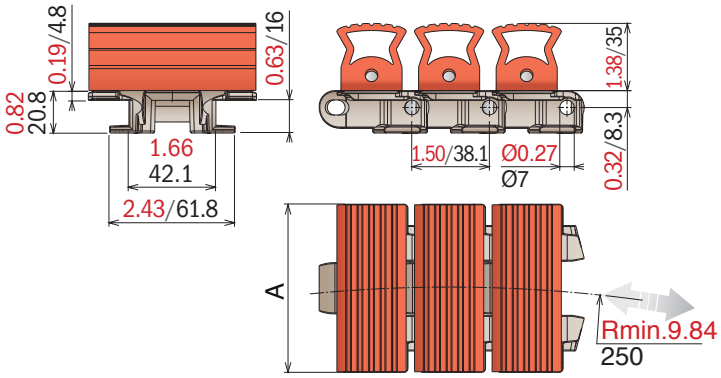

Tab System

10 feet
3.048 m
80 links

pg. 86-87

pg. 102/104

pg. 380->386

Article-Nr.	Ref.	A (Plate Width) in-mm	R in-mm	Weight lbs/ft-kg/m	Max working load (lbs/N)	Rubber	Material
11820102	LF 878 GS4 K325	3.25/82,5	9.84/250	2.75/4,10	495/2200	TPR	LF

1843 *Sideflexing chain*

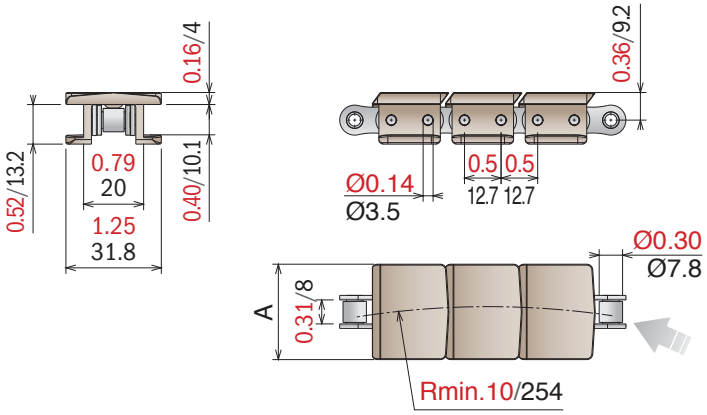

Standard lenght roller chain: 240 Pitches

New | **Tab System** | 10 feet 3.048 m | 120 links | SPROCKET ASA 60 Standard on market | pg. 380->386

Article-Nr.	Chain	Ref.	A (Plate Width) in-mm	R in-mm	Weight lbs/ft-kg/m	Max working load (lbs/N)	Backflex radius min. in-mm	Material
11400117	C45	LF 1843 TAB K125	1.25/31,8	10.00/254	0.49/0,74	607/2700	1.97/50	LF
11410117	Stainless Steel		1.25/31,8	10.00/254	0.49/0,74	430/1900		
11400119	C45	LF 1843 TAB K200	2.00/50,8	10.00/254	0.59/0,89	607/2700		
11410119	Stainless Steel		2.00/50,8	10.00/254	0.59/0,89	430/1900		
11400317	C45	MX 1843 TAB K125	1.25/31,8	10.00/254	0.49/0,74	607/2700	1.97/50	MX
11410317	Stainless Steel		1.25/31,8	10.00/254	0.49/0,74	430/1900		
11400319	C45	MX 1843 TAB K200	2.00/50,8	10.00/254	0.59/0,89	607/2700		
11410319	Stainless Steel		2.00/50,8	10.00/254	0.59/0,89	430/1900		

SP 1883

Sideflexing chain

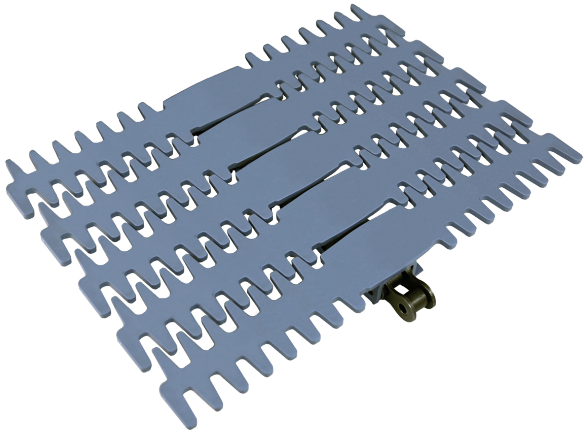

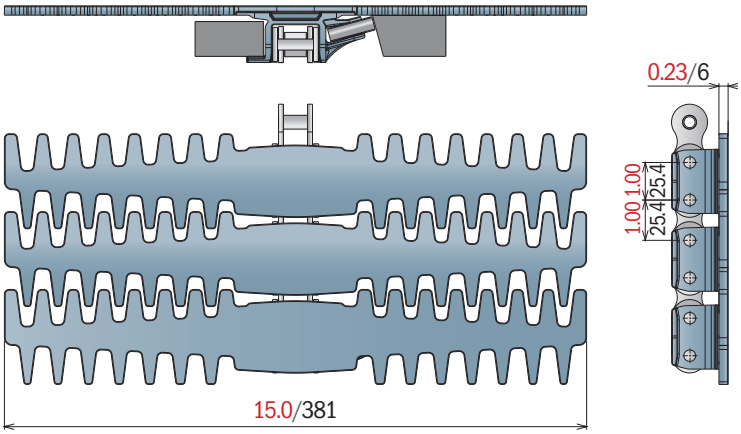

10 feet
3.048 m
60 links

SPROCKET
ASA 80
Standard on market

pg. 380->386

Standard lenght roller chain: 120 Pitches

Article-Nr.	Chain	Ref.	A (Plate Width) in-mm	Weight lbs/ft-kg/m	Max working load (lbs/N)	Sideflex radius min. in-mm	Material
11640110	C45	LFA SP 1883 TAB K1500	15.00/381,0	8.40/12,5	1011/4500	28.0/711	LFA
11640310	Stainless Steel		15.00/381,0	8.40/12,5	787/3500		

Spiral Conveyor Technology

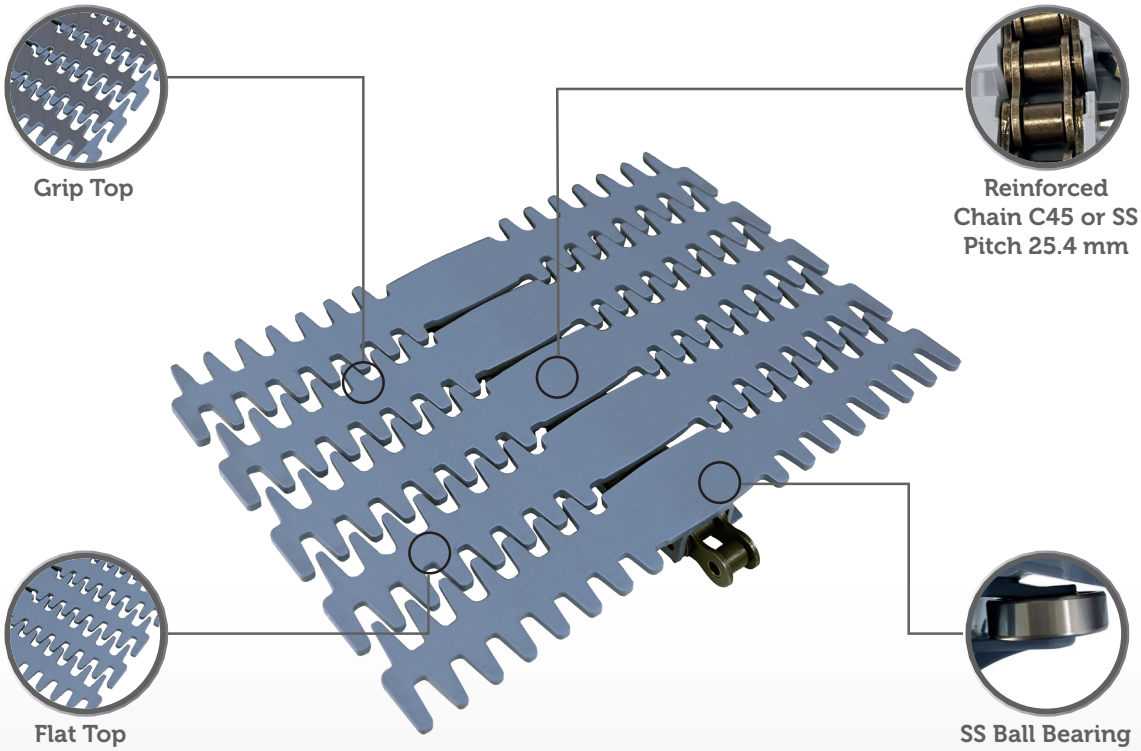

SP 1883 GT

Sideflexing chain

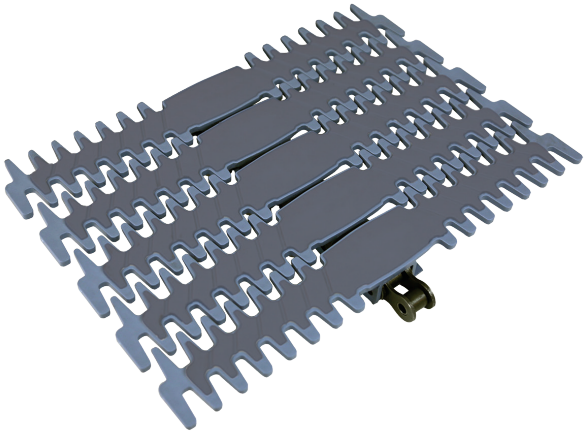

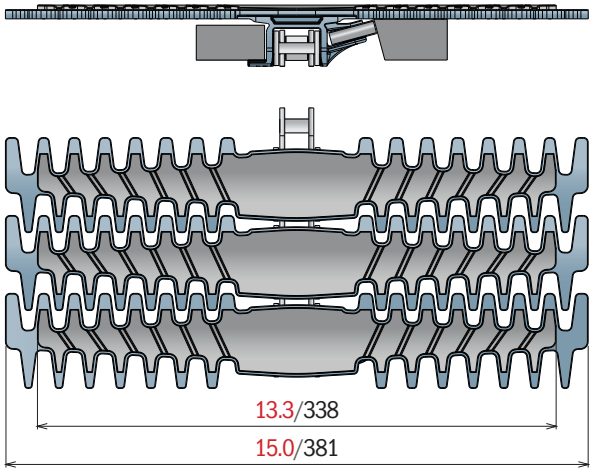

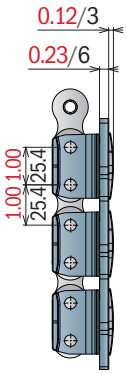

10 feet
3.048 m
60 links

SPROCKET
ASA 80
Standard on market

pg. 380->386

Standard lenght roller chain: 120 Pitches

Article-Nr.	Chain	Ref.	A (Plate Width) in-mm	Weight lbs/ft-kg/m	Max working load (lbs/N)	Sideflex radius min. in-mm	Material
11650110	C45	LFA SP 1883 GT TAB K1500	15.00/381,0	8.74/13,0	1011/4500	28.0/711	LFA
11650310	Stainless Steel		15.00/381,0	8.74/13,0	787/3500		

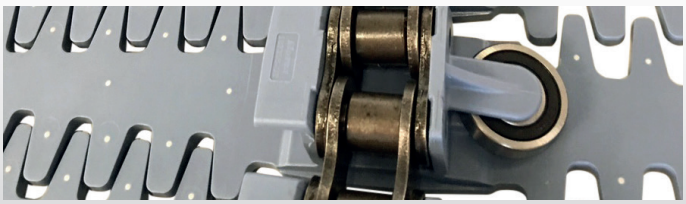

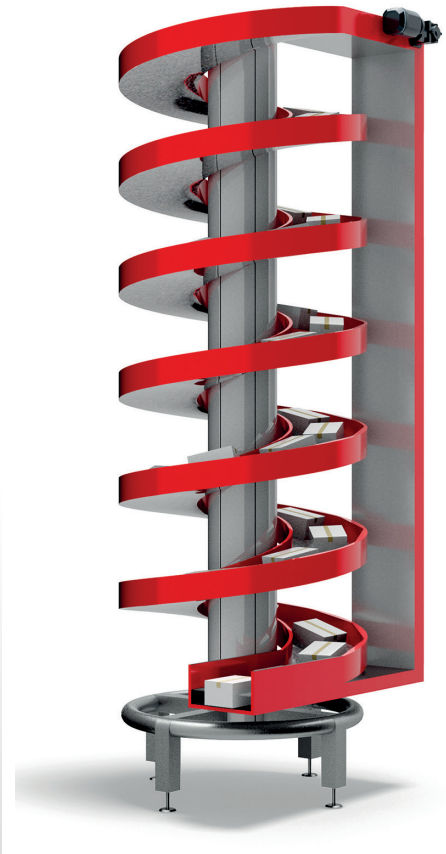

CC 600

Sideflexing chain

Pins: Stainless Steel | **Backflex radius min.:** 1.97 in/50 mm

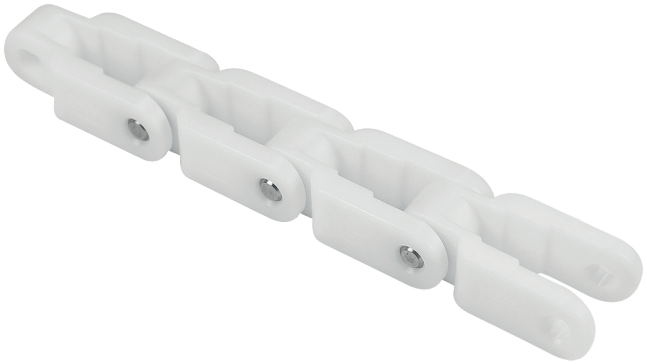

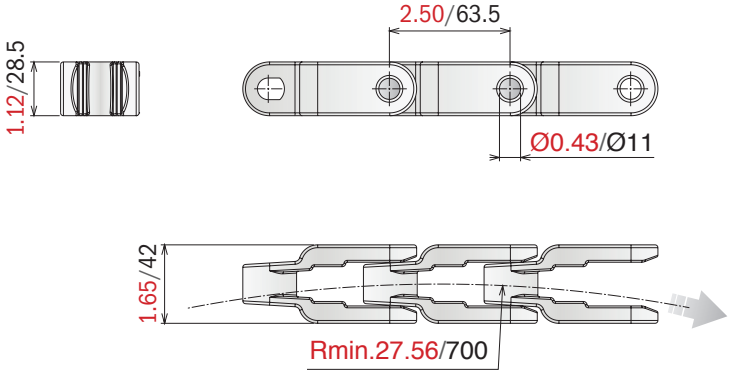

10 feet 3.048 m | 48 links | pg. 94 | pg. 380->386

Article-Nr.	Ref.	A (Plate Width) in-mm	Weight lbs/ft-kg/m	Max working load (lbs/N)	Material
11220400	CC 600	1.65/42	0.90/1,35	900/4000	LFN
11220300	CC 600	1.65/42	0.90/1,35	720/3200	MX

CC 600 TAB

Sideflexing chain

Pins: Stainless Steel | **Backflex radius min.:** 1.97 in/50 mm

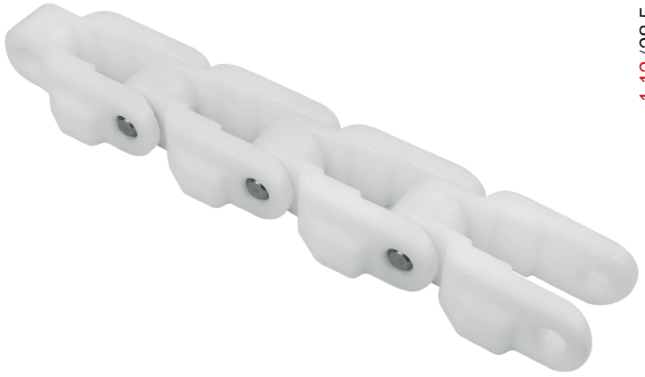

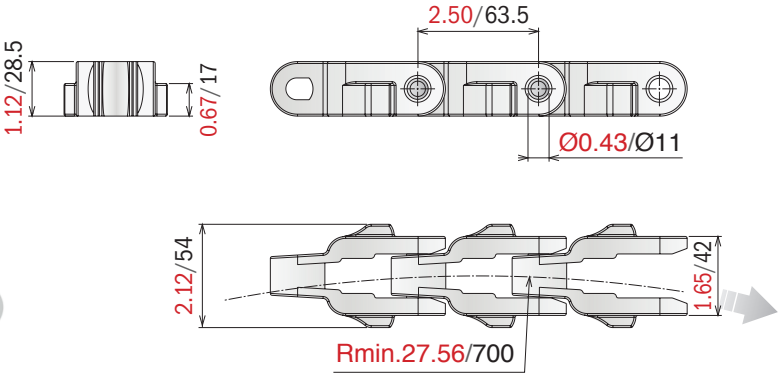

Tab System

10 feet 3.048 m | 48 links | pg. 94 | pg. 380->386

Article-Nr.	Ref.	A (Plate Width) in-mm	Weight lbs/ft-kg/m	Max working load (lbs/N)	Material
11230400	CC 600 TAB	1.65/42	0.97/1,45	900/4000	LFN
11230300	CC 600 TAB	1.65/42	0.97/1,45	720/3200	MX

CC 600 D

Sideflexing chain

Pins: Stainless Steel | **Backflex radius min.:** 1.97 in/50 mm

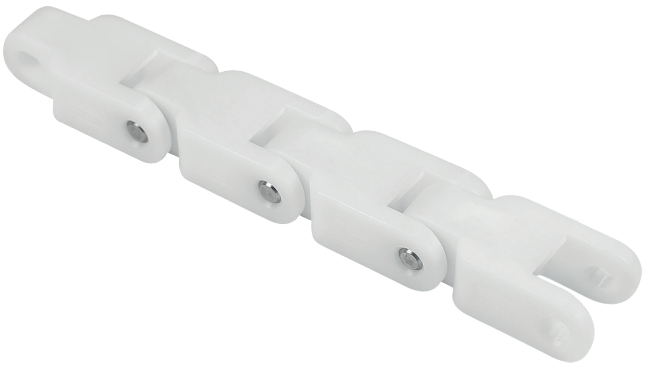

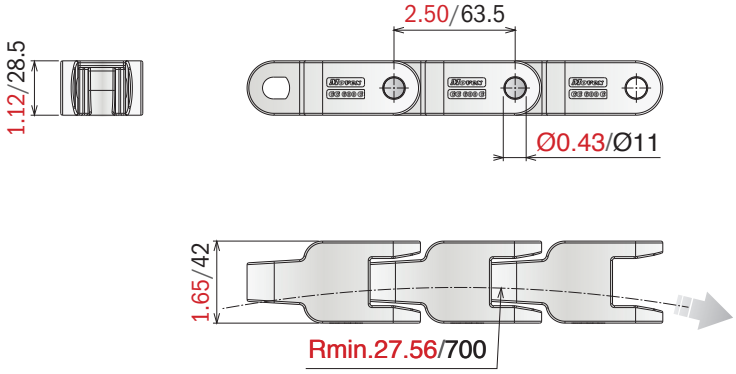

New

10 feet
3.048 m
48 links
pg. 94
pg. 380->386

Article-Nr.	Ref.	A (Plate Width) in-mm	Weight lbs/ft-kg/m	Max working load (lbs/N)	Material
11220410	CC 600 D	1.65/42	0.94/1,40	900/4000	LFN
11220310	CC 600 D	1.65/42	0.94/1,40	720/3200	MX

CC 600 D TAB

Sideflexing chain

Pins: Stainless Steel | **Backflex radius min.:** 1.97 in/50 mm

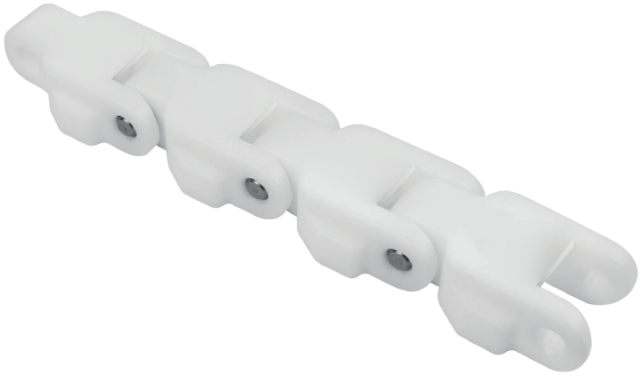

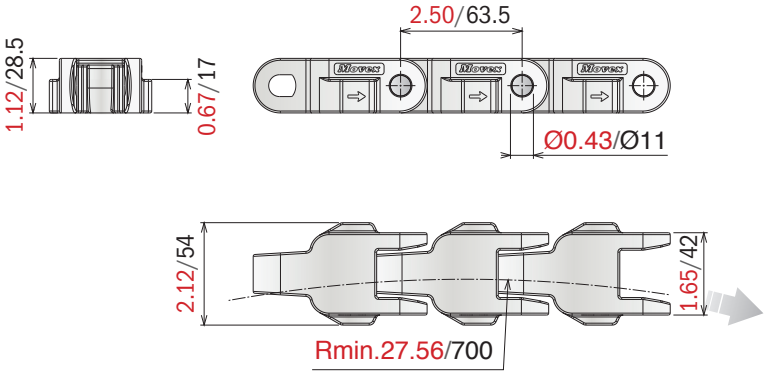

New

Tab System

10 feet
3.048 m
48 links
pg. 94
pg. 380->386

Article-Nr.	Ref.	A (Plate Width) in-mm	Weight lbs/ft-kg/m	Max working load (lbs/N)	Material
11230410	CC 600 D TAB	1.65/42	1.04/1,55	900/4000	LFN
11230310	CC 600 D TAB	1.65/42	1.04/1,55	720/3200	MX

CC 1400

Sideflexing chain

Pins: Stainless Steel | **Backflex radius min.:** 1.97 in/50 mm

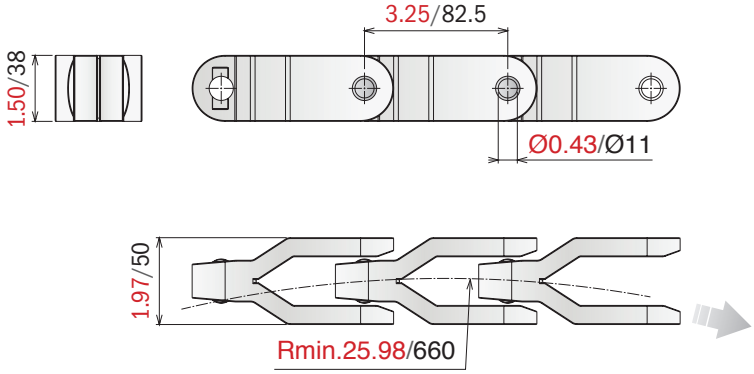

10 feet 3.048 m | 37 links | pg. 94 | pg. 380->386

Article-Nr.	Ref.	A (Plate Width) in-mm	Weight lbs/ft-kg/m	Max working load (lbs/N)	Material
11300400	CC 1400	1.97/50	2.18/3,24	1460/6500	LFN
11300300	CC 1400	1.97/50	2.18/3,24	1170/5200	MX

CC 1400 TAB

Sideflexing chain

Pins: Stainless Steel | **Backflex radius min.:** 1.97 in/50 mm

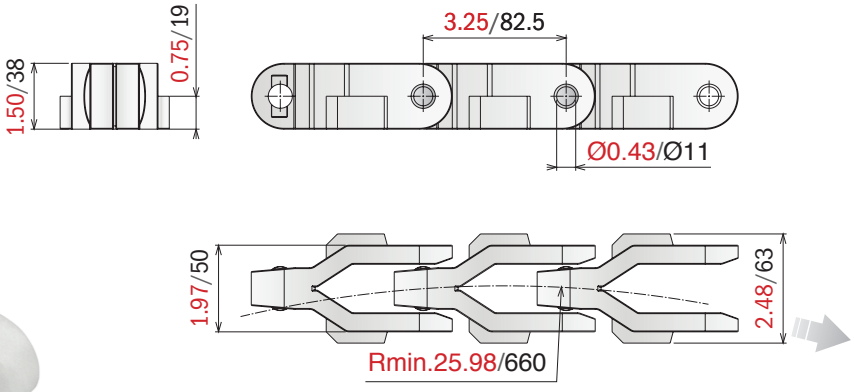

Tab System

10 feet 3.048 m | 37 links | pg. 94 | pg. 380->386

Article-Nr.	Ref.	A (Plate Width) in-mm	Weight lbs/ft-kg/m	Max working load (lbs/N)	Material
11310400	CC 1400 TAB	1.97/50	2.18/3,24	1460/6500	LFN
11310300	CC 1400 TAB	1.97/50	2.18/3,24	1170/5200	MX

1701 TAB OP

Sideflexing chain

Pins: Stainless Steel | **Backflex radius min.:** 1.97 in/50 mm

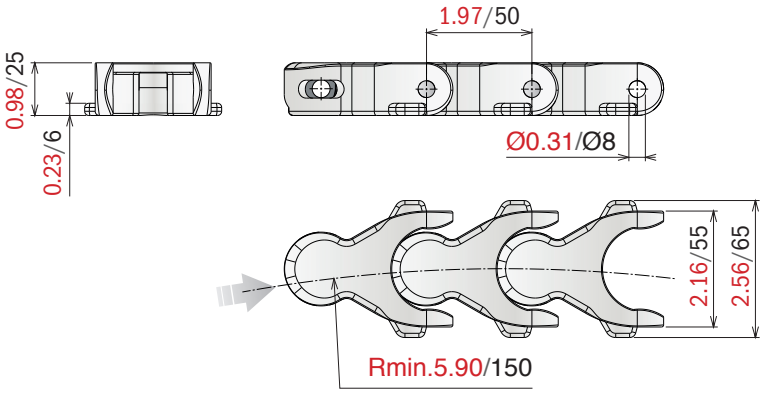

New

Tab System

10 feet
3.048 m
61 links

pg. 95
pg. 143/148
pg. 380->386

Article-Nr.	Ref.	A (Plate Width) in-mm	Weight lbs/ft-kg/m	Max working load (lbs/N)	Material
11360400	LF 1701 TAB OP	2.16/55	0.94/1,40	607/2700	LFN
11360300	MX 1701 TAB OP	2.16/55	0.94/1,40	485/2160	MX

1701 TAB OPF

Sideflexing chain

Pins: Stainless Steel

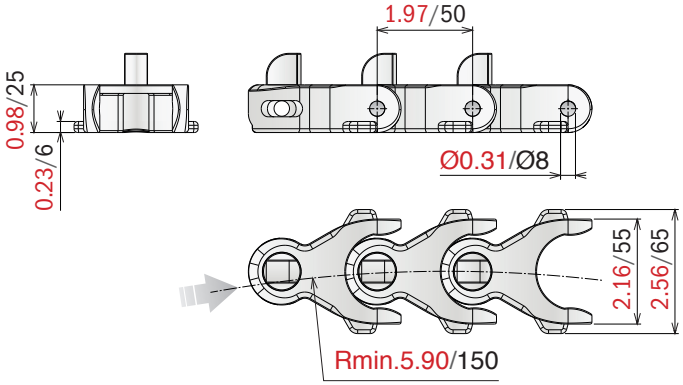

Type A

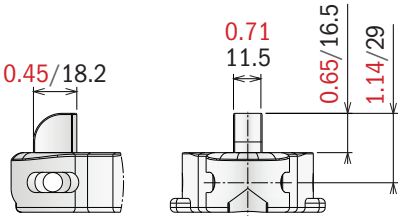

Type B

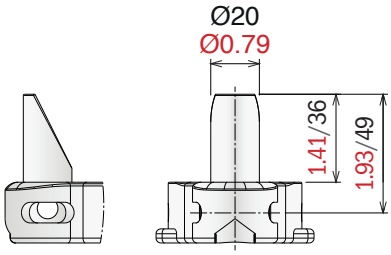

Type C

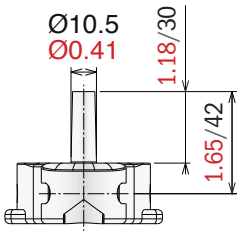

Type D

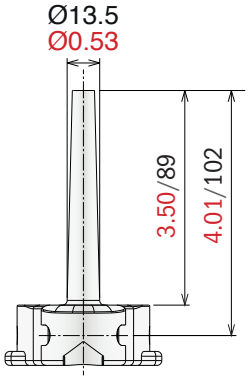

New **Tab System**

10 feet 3.048 m | 61 links | pg. 95 | pg. 380->386

Article-Nr.	Ref.	A (Plate Width) in-mm	Weight lbs/ft-kg/m	Max working load (lbs/N)	Material
11360400-FA	1701 TAB Type A	2.16/55	1.07/1,60	607/2700	LFN
11360400-FB	1701 TAB Type B	2.16/55	1.07/1,60		
11360400-FC	1701 TAB Type C	2.16/55	1.34/2,00		
11360400-FD	1701 TAB Type D	2.16/55	1.54/2,30		

1706 *Sideflexing chain*

Pins: Stainless Steel | **Backflex radius min.:** 1.97 in/50 mm

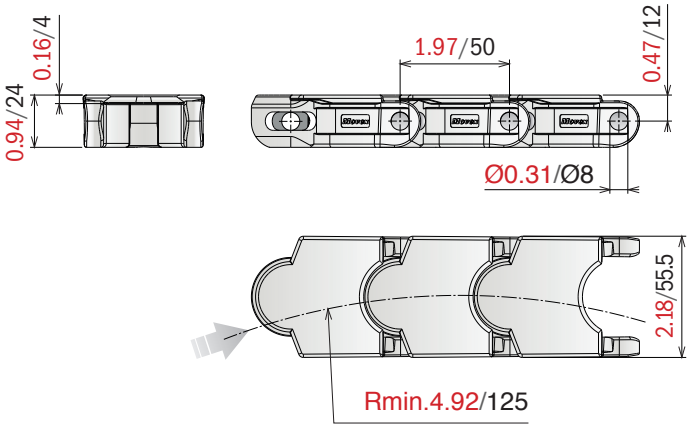

New

10 feet 3.048 m | 61 links | pg. 95 | pg. 380->386

Article-Nr.	Ref.	A (Plate Width) in-mm	Weight lbs/ft-kg/m	Max working load (lbs/N)	Material
11720400	LF 1706	2.18/55,5	0.91/1,35	517/2300	LFN
11720300	MX 1706	2.18/55,5	0.91/1,35	430/1900	MX

1706 TAB *Sideflexing chain*

Pins: Stainless Steel | **Backflex radius min.:** 1.97 in/50 mm

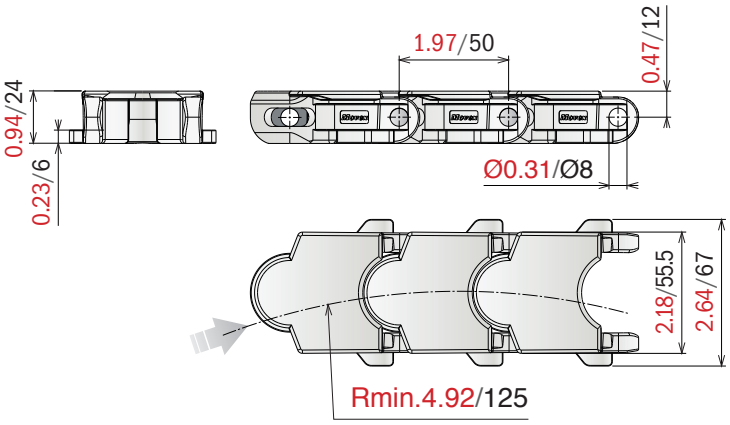

New **Tab System**

10 feet 3.048 m | 61 links | pg. 95 | pg. 380->386

Article-Nr.	Ref.	A (Plate Width) in-mm	Weight lbs/ft-kg/m	Max working load (lbs/N)	Material
11730400	LF 1706 TAB	2.18/55,5	0.93/1,38	517/2300	LFN
11730300	MX 1706 TAB	2.18/55,5	0.93/1,38	430/1900	MX

Sprockets

The sprocket is one of the most important parts of a conveyor. A well designed sprocket will ensure that the conveyor runs smoothly and efficiently for a long time.

We have a wide variety of machined and molded sprockets to cover all application needs.

Movex Sprockets are designed based on many years of experience to provide you the ultimate solution.

1. *All our sprockets are designed split so that it can be installed and uninstalled from the shaft easily.*

2. *All surfaces and edges from the sprockets are smooth to prevent dirt depositing easily. This makes cleaning easier, maintaining a high hygiene standard.*

3. *Our sprockets are produced from the best polyamide material to ensure longer wear life.*

4. *The sprocket teeth are uniquely designed to provide maximum contact surface with the chain henceforth giving lowest applied force per tooth. This ensures longer wear life for the sprocket. In addition the sprockets are designed in such a way that chain elongation tolerances can be absorbed. This will assure a life-long positive engagement between chain and sprocket.*

5. *Bolds used to assemble the sprockets are paired with nickel or zinc plated steel nuts to ensure easy removal.*

77

Chain sprockets

815 *Pag 78*

815 *Pag 78*

815 *Pag 79*

815 *Pag 79*

881 *Pag 80*

881 *Pag 80*

881 *Pag 81*

881 *Pag 81*

805-821 *Pag 82*

805-821 *Pag 82*

8157 *Pag 83*

8157 *Pag 83*

820-831 *Pag 84*

820-831 *Pag 84*

820-831 *Pag 85*

820-831 *Pag 85*

880 *Pag 86*

880 *Pag 86*

880 *Pag 87*

880 *Pag 87*

882 *Pag 88*

882 *Pag 88*

882 *Pag 89*

882 *Pag 89*

512 *Pag 90*

512 *Pag 90*

815 *Pag 91*

8157 *Pag 91*

805 *Pag 92*

820 *Pag 92*

815 MINI *Pag 93*

815 MINI *Pag 93*

CC 600 *Pag 94*

CC 1400 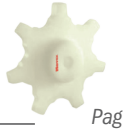 *Pag 94*

1701-1706 *Pag 95*

1701-1706 *Pag 95*

Material: Polyamide
Screws: Stainless steel
Nuts: Zinc plated steel

815 Split drive sprocket, machined

Used also for Series 881 M

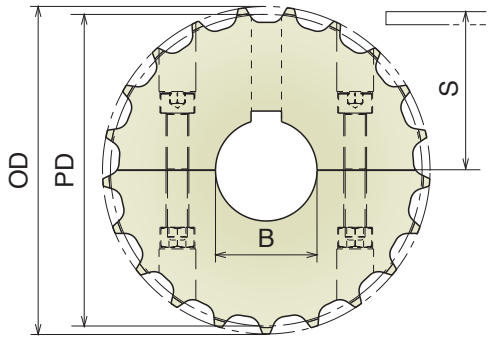

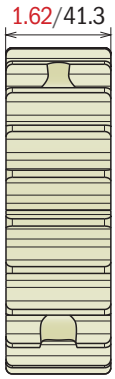

Part	Article-Nr.	Z-	Bore in	PD in-mm	OD in-mm	S in-mm
501	50101Y	17	1	4.15/105,5	4.09/103,9	2.20/55,9
501	50102Y		1¼			
501	50103Y		1 7/16			
501	50104Y		1½			
502	50201Y	19	1	4.62/117,3	4.61/117,0	2.44/61,9
502	50202Y		1¼			
502	50203Y		1 7/16			
502	50204Y		1½			
503	50301Y	21	1	5.09/129,3	5.08/129,0	2.67/67,8
503	50302Y		1¼			
503	50303Y		1 7/16			
503	50304Y		1½			
504	50401Y	23	1	5.56/141,2	5.60/142,0	2.90/73,8
504	50402Y		1¼			
504	50403Y		1 7/16			
504	50404Y		1½			
505	50501Y	25	1	6.03/153,2	6.06/154,0	3.14/79,8
505	50502Y		1¼			
505	50503Y		1 7/16			
505	50504Y		1½			
506	50601Y	27	1	6.50/165,2	6.57/166,8	3.38/85,8
506	50602Y		1¼			
506	50603Y		1 7/16			
506	50604Y		1½			
507	50701Y	29	1	6.98/177,2	7.03/178,5	3.61/91,8
507	50702Y		1¼			
507	50703Y		1 7/16			
507	50704Y		1½			

Split idler sprocket, machined

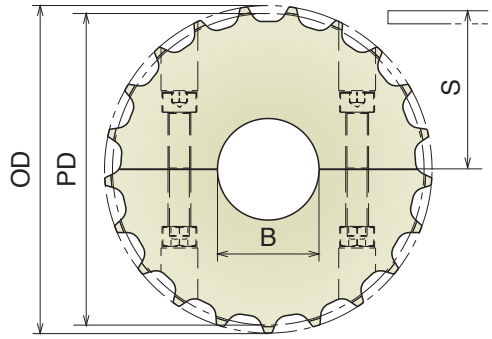

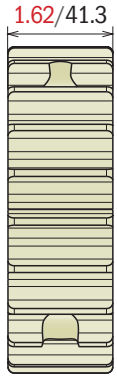

Part	Article-Nr.	Z-	Bore in	PD in-mm	OD in-mm	S in-mm
501	50150	17	0.71*	4.15/105,5	4.09/103,9	2.20/55,9
501	50151Y		1			
501	50152Y		1¼			
501	50153Y		1 7/16			
501	50154Y		1½			
502	50250	19	0.71*	4.62/117,3	4.61/117,0	2.44/61,9
502	50251Y		1			
502	50252Y		1¼			
502	50253Y		1 7/16			
502	50254Y		1½			
503	50350	21	0.71*	5.09/129,3	5.08/129,0	2.67/67,8
503	50351Y		1			
503	50352Y		1¼			
503	50353Y		1 7/16			
503	50354Y		1½			
504	50450	23	0.71*	5.56/141,2	5.60/142,0	2.90/73,8
504	50451Y		1			
504	50452Y		1¼			
504	50453Y		1 7/16			
504	50454Y		1½			
505	50550	25	0.71*	6.03/153,2	6.06/154,0	3.14/79,8
505	50551Y		1			
505	50552Y		1¼			
505	50553Y		1 7/16			
505	50554Y		1½			
506	50650	27	0.71*	6.50/165,2	6.57/166,8	3.38/85,8
506	50651Y		1			
506	50652Y		1¼			
506	50653Y		1 7/16			
506	50654Y		1½			
507	50750	29	0.71*	6.98/177,2	7.03/178,5	3.61/91,8
507	50751Y		1			
507	50752Y		1¼			
507	50753Y		1 7/16			
507	50754Y		1½			

*Plain Bore

Material: Reinforced polyamide
Screws: Stainless steel
Nuts: Zinc plated steel

815 *Split drive sprocket, machined*

Used also for Series 881 M

Part	Article-Nr.	Z-	Bore in	PD in-mm	OD in-mm	S in-mm
508	50801Y	21	1	5.09/129,3	5.08/129,0	2.67/67,8
508	50802Y		1¼			
508	50803Y		1 7/16			
508	50804Y		1½			
509	50901Y	23	1	5.56/141,2	5.60/142,0	2.90/73,8
509	50902Y		1¼			
509	50903Y		1 7/16			
509	50904Y		1½			
510	51001Y	25	1	6.03/153,2	6.06/154,0	3.14/79,8
510	51002Y		1¼			
510	51003Y		1 7/16			
510	51004Y		1½			

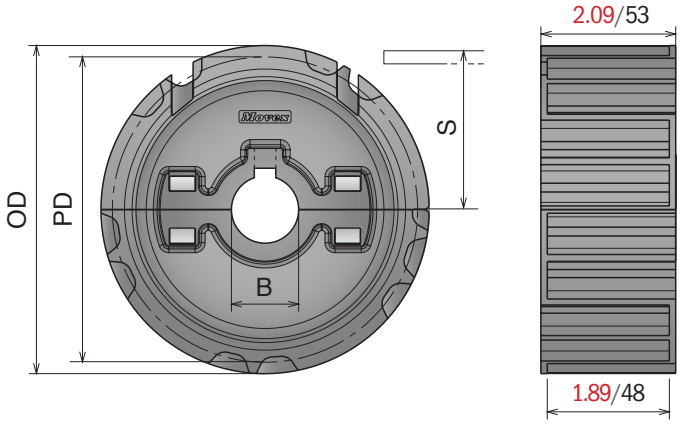

Improved Design and Performance

Split idler sprocket, molded

Part	Article-Nr.	Z-	Bore in	PD in-mm	OD in-mm	S in-mm
508	50851Y	21	1	5.09/129,3	5.08/129,0	2.67/67,8
508	50852Y		1¼			
508	50853Y		1 7/16			
508	50854Y		1½			
509	50951Y	23	1	5.56/141,2	5.60/142,0	2.90/73,8
509	50952Y		1¼			
509	50953Y		1 7/16			
509	50954Y		1½			
510	51051Y	25	1	6.03/153,2	6.06/154,0	3.14/79,8
510	51052Y		1¼			
510	51053Y		1 7/16			
510	51054Y		1½			

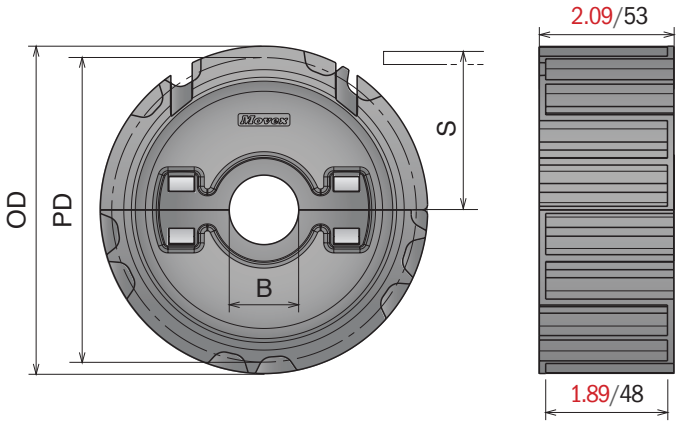

Improved Design and Performance

Material: Polyamide
Screws: Stainless steel
Nuts: Zinc plated steel

881 Split drive sprocket, machined

Used for Series 881 B and 881 TAB

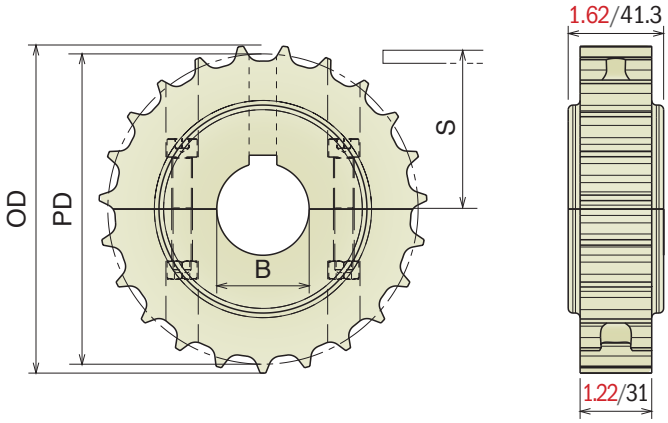

Part	Article-Nr.	Z-	Bore in	PD in-mm	OD in-mm	S in-mm
511	51101Y	17	1	4.15/105,5	4.09/103,9	2.20/55,9
511	51102Y		1¼			
511	51103Y		1 7/16			
511	51104Y		1½			
512	51201Y	19	1	4.62/117,3	4.61/117,0	2.44/61,9
512	51202Y		1¼			
512	51203Y		1 7/16			
512	51204Y		1½			
513	51301Y	21	1	5.09/129,3	5.08/129,0	2.67/67,8
513	51302Y		1¼			
513	51303Y		1 7/16			
513	51304Y		1½			
514	51401Y	23	1	5.56/141,2	5.60/142,0	2.90/73,8
514	51402Y		1¼			
514	51403Y		1 7/16			
514	51404Y		1½			
515	51501Y	25	1	6.03/153,2	6.06/154,0	3.14/79,8
515	51502Y		1¼			
515	51503Y		1 7/16			
515	51504Y		1½			
516	51601Y	27	1	6.50/165,2	6.57/166,8	3.38/85,8
516	51602Y		1¼			
516	51603Y		1 7/16			
516	51604Y		1½			
517	51701Y	29	1	6.98/177,2	7.03/178,5	3.61/91,8
517	51702Y		1¼			
517	51703Y		1 7/16			
517	51704Y		1½			

Split idler sprocket, machined

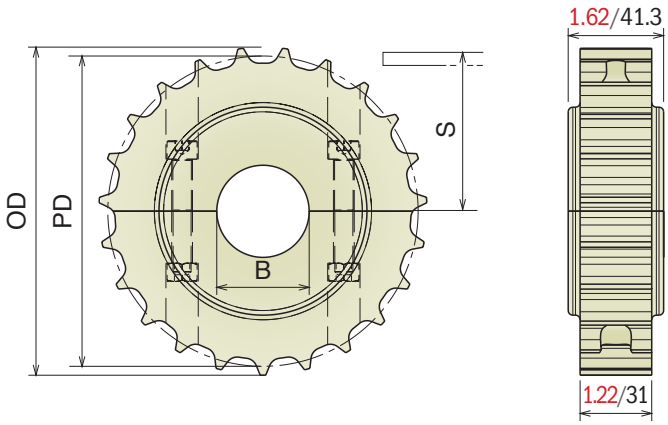

Part	Article-Nr.	Z-	Bore in	PD in-mm	OD in-mm	S in-mm
511	51150	17	0.71*	4.15/105,5	4.09/103,9	2.20/55,9
511	51151Y		1			
511	51152Y		1¼			
511	51153Y		1 7/16			
511	51154Y		1½			
512	51250	19	0.71*	4.62/117,3	4.61/117,0	2.44/61,9
512	51251Y		1			
512	51252Y		1¼			
512	51253Y		1 7/16			
512	51254Y		1½			
513	51350	21	0.71*	5.09/129,3	5.08/129,0	2.67/67,8
513	51351Y		1			
513	51352Y		1¼			
513	51353Y		1 7/16			
513	51354Y		1½			
514	51450	23	0.71*	5.56/141,2	5.60/142,0	2.90/73,8
514	51451Y		1			
514	51452Y		1¼			
514	51453Y		1 7/16			
514	51454Y		1½			
515	51550	25	0.71*	6.03/153,2	6.06/154,0	3.14/79,8
515	51551Y		1			
515	51552Y		1¼			
515	51553Y		1 7/16			
515	51554Y		1½			
516	51650	27	0.71*	6.50/165,2	6.57/166,8	3.38/85,8
516	51651Y		1			
516	51652Y		1¼			
516	51653Y		1 7/16			
516	51654Y		1½			
517	51750	29	0.71*	6.98/177,2	7.03/178,5	3.61/91,8
517	51751Y		1			
517	51752Y		1¼			
517	51753Y		1 7/16			
517	51754Y		1½			

*Plain Bore

Material: Reinforced polyamide
Screws: Stainless steel
Nuts: Zinc plated steel

881 *Split drive sprocket, molded*

Used for Series 881 B and 881 TAB

Part	Article-Nr.	Z-	Bore in	PD in-mm	OD in-mm	S in-mm
518	51801Y	21	1	5.09/129,3	5.08/129,0	2.67/67,8
518	51802Y		1¼			
518	51803Y		1 7/16			
518	51804Y		1½			
519	51901Y	23	1	5.56/141,2	5.60/142,0	2.90/73,8
519	51902Y		1¼			
519	51903Y		1 7/16			
519	51904Y		1½			
520	52001Y	25	1	6.03/153,2	6.06/154,0	3.14/79,8
520	52002Y		1¼			
520	52003Y		1 7/16			
520	52004Y		1½			

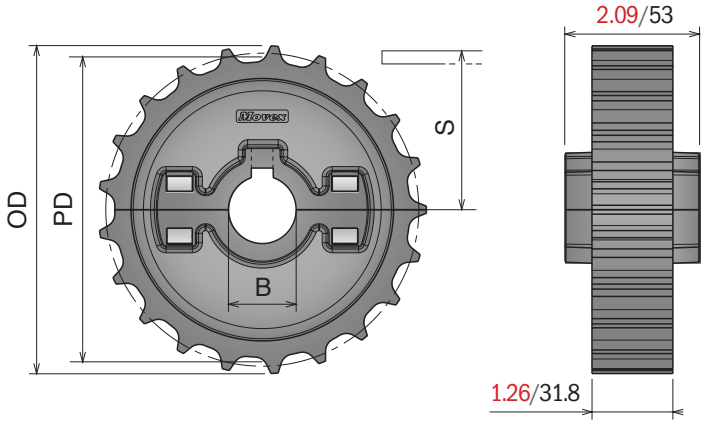

Split idler sprocket, molded

Part	Article-Nr.	Z-	Bore in	PD in-mm	OD in-mm	S in-mm
518	51851Y	21	1	5.09/129,3	5.08/129,0	2.67/67,8
518	51852Y		1¼			
518	51853Y		1 7/16			
518	51854Y		1½			
519	51951Y	23	1	5.56/141,2	5.60/142,0	2.90/73,8
519	51952Y		1¼			
519	51953Y		1 7/16			
519	51954Y		1½			
520	52051Y	25	1	6.03/153,2	6.06/154,0	3.14/79,8
520	52052Y		1¼			
520	52053Y		1 7/16			
520	52054Y		1½			

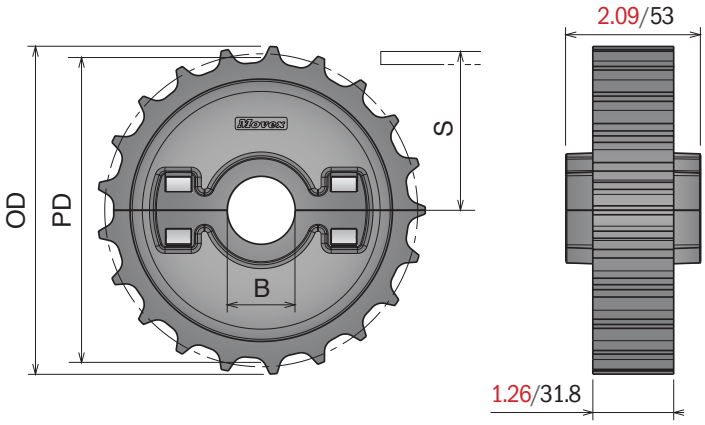

Material: Polyamide
Screws: Stainless steel
Nuts: Zinc plated steel

805-821

Split drive sprocket, machined

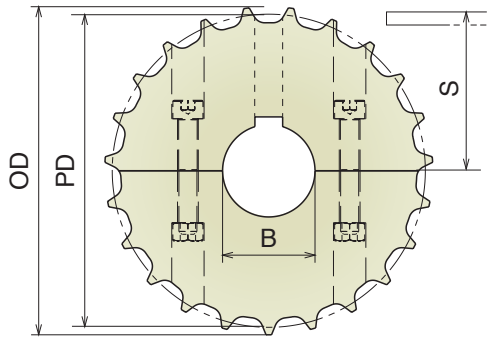

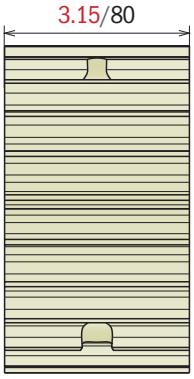

Part	Article-Nr.	Z-	Bore in	PD in-mm	OD in-mm	S in-mm
521	52101Y	17	1	4.15/105,5	4.09/103,9	2.20/55,9
521	52102Y		1¼			
521	52103Y		1 7/16			
521	52104Y		1½			
522	52201Y	19	1	4.62/117,3	4.61/117,0	2.44/61,9
522	52202Y		1¼			
522	52203Y		1 7/16			
522	52204Y		1½			
523	52301Y	21	1	5.09/129,3	5.08/129,0	2.67/67,8
523	52302Y		1¼			
523	52303Y		1 7/16			
523	52304Y		1½			
524	52401Y	23	1	5.56/141,2	5.60/142,0	2.90/73,8
524	52402Y		1¼			
524	52403Y		1 7/16			
524	52404Y		1½			
525	52501Y	25	1	6.03/153,2	6.06/154,0	3.14/79,8
525	52502Y		1¼			
525	52503Y		1 7/16			
525	52504Y		1½			
526	52601Y	27	1	6.50/165,2	6.57/166,8	3.38/85,8
526	52602Y		1¼			
526	52603Y		1 7/16			
526	52604Y		1½			
527	52701Y	29	1	6.98/177,2	7.03/178,5	3.61/91,8
527	52702Y		1¼			
527	52703Y		1 7/16			
527	52704Y		1½			

Split idler sprocket, machined

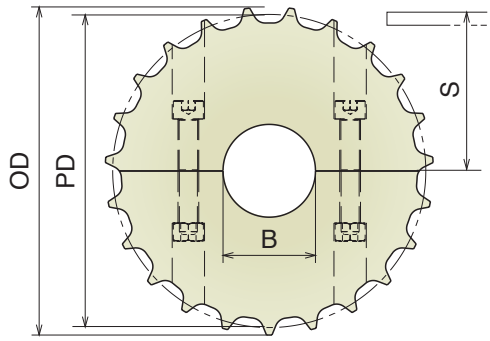

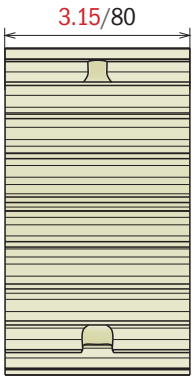

Part	Article-Nr.	Z-	Bore in	PD in-mm	OD in-mm	S in-mm
521	52150	17	0.71*	4.15/105,5	4.09/103,9	2.20/55,9
521	52151Y		1			
521	52152Y		1¼			
521	52153Y		1 7/16			
521	52154Y		1½			
522	52250	19	0.71*	4.62/117,3	4.61/117,0	2.44/61,9
522	52251Y		1			
522	52252Y		1¼			
522	52253Y		1 7/16			
522	52254Y		1½			
523	52350	21	0.71*	5.09/129,3	5.08/129,0	2.67/67,8
523	52351Y		1			
523	52352Y		1¼			
523	52353Y		1 7/16			
523	52354Y		1½			
524	52450	23	0.71*	5.56/141,2	5.60/142,0	2.90/73,8
524	52451Y		1			
524	52452Y		1¼			
524	52453Y		1 7/16			
524	52454Y		1½			
525	52550	25	0.71*	6.03/153,2	6.06/154,0	3.14/79,8
525	52551Y		1			
525	52552Y		1¼			
525	52553Y		1 7/16			
525	52554Y		1½			
526	52650	27	0.71*	6.50/165,2	6.57/166,8	3.38/85,8
526	52651Y		1			
526	52652Y		1¼			
526	52653Y		1 7/16			
526	52654Y		1½			
527	52750	29	0.71*	6.98/177,2	7.03/178,5	3.61/91,8
527	52751Y		1			
527	52752Y		1¼			
527	52753Y		1 7/16			
527	52754Y		1½			

*Plain Bore

Material: Polyamide
Screws: Stainless steel
Nuts: Zinc plated steel

8157

Split drive sprocket, machined

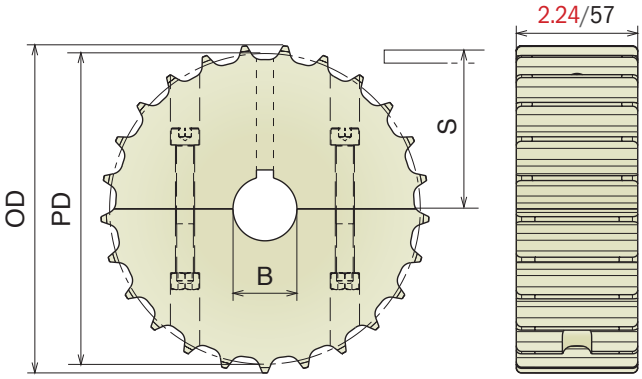

Part	Article-Nr.	Z-	Bore in	PD in-mm	OD in-mm	S in-mm
528	52801Y	17	1	4.15/105,5	4.09/103,9	2.20/55,9
528	52802Y		1¼			
528	52803Y		1 7/16			
528	52804Y		1½			
529	52901Y	19	1	4.62/117,3	4.61/117,0	2.44/61,9
529	52902Y		1¼			
529	52903Y		1 7/16			
529	52904Y		1½			
530	53001Y	21	1	5.09/129,3	5.08/129,0	2.67/67,8
530	53002Y		1¼			
530	53003Y		1 7/16			
530	53004Y		1½			
531	53101Y	23	1	5.56/141,2	5.60/142,0	2.90/73,8
531	53102Y		1¼			
531	53103Y		1 7/16			
531	53104Y		1½			
532	53201Y	25	1	6.03/153,2	6.06/154,0	3.14/79,8
532	53202Y		1¼			
532	53203Y		1 7/16			
532	53204Y		1½			
533	53301Y	27	1	6.50/165,2	6.57/166,8	3.38/85,8
533	53302Y		1¼			
533	53303Y		1 7/16			
533	53304Y		1½			
534	53401Y	29	1	6.98/177,2	7.03/178,5	3.61/91,8
534	53402Y		1¼			
534	53403Y		1 7/16			
534	53404Y		1½			

Split idler sprocket, machined

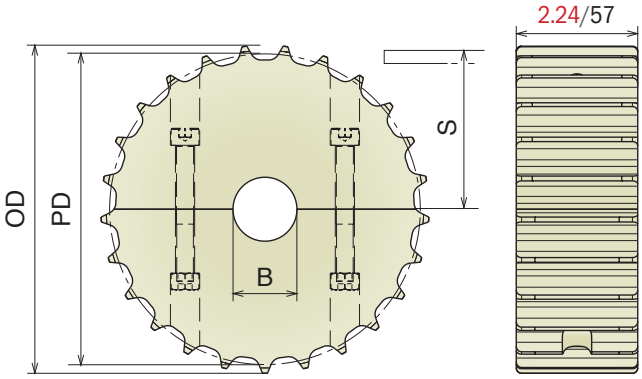

Part	Article-Nr.	Z-	Bore in	PD in-mm	OD in-mm	S in-mm
528	52850	17	0.71*	4.15/105,5	4.09/103,9	2.20/55,9
528	52851Y		1			
528	52852Y		1¼			
528	52853Y		1 7/16			
528	52854Y		1½			
529	52950	19	0.71*	4.62/117,3	4.61/117,0	2.44/61,9
529	52951Y		1			
529	52952Y		1¼			
529	52953Y		1 7/16			
529	52954Y		1½			
530	53050	21	0.71*	5.09/129,3	5.08/129,0	2.67/67,8
530	53051Y		1			
530	53052Y		1¼			
530	53053Y		1 7/16			
530	53054Y		1½			
531	53150	23	0.71*	5.56/141,2	5.60/142,0	2.90/73,8
531	53151Y		1			
531	53152Y		1¼			
531	53153Y		1 7/16			
531	53154Y		1½			
532	53250	25	0.71*	6.03/153,2	6.06/154,0	3.14/79,8
532	53251Y		1			
532	53252Y		1¼			
532	53253Y		1 7/16			
532	53254Y		1½			
533	53350	27	0.71*	6.50/165,2	6.57/166,8	3.38/85,8
533	53351Y		1			
533	53352Y		1¼			
533	53353Y		1 7/16			
533	53354Y		1½			
534	53450	29	0.71*	6.98/177,2	7.03/178,5	3.61/91,8
534	53451Y		1			
534	53452Y		1¼			
534	53453Y		1 7/16			
534	53454Y		1½			

*Plain Bore

Material: Polyamide
Screws: Stainless steel
Nuts: Zinc plated steel

820-831

Split drive sprocket, machined

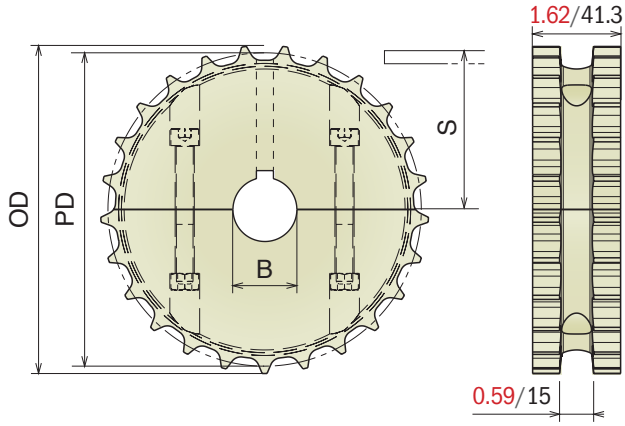

Part	Article-Nr.	Z-	Bore in	PD in-mm	OD in-mm	S in-mm
535	53501Y	17	1	4.15/105,5	4.09/103,9	2.20/55,9
535	53502Y		1¼			
535	53503Y		1 7/16			
535	53504Y		1½			
536	53601Y	19	1	4.62/117,3	4.61/117,0	2.44/61,9
536	53602Y		1¼			
536	53603Y		1 7/16			
536	53604Y		1½			
537	53701Y	21	1	5.09/129,3	5.08/129,0	2.67/67,8
537	53702Y		1¼			
537	53703Y		1 7/16			
537	53704Y		1½			
538	53801Y	23	1	5.56/141,2	5.60/142,0	2.90/73,8
538	53802Y		1¼			
538	53803Y		1 7/16			
538	53804Y		1½			
539	53901Y	25	1	6.03/153,2	6.06/154,0	3.14/79,8
539	53902Y		1¼			
539	53903Y		1 7/16			
539	53904Y		1½			
540	54001Y	27	1	6.50/165,2	6.57/166,8	3.38/85,8
540	54002Y		1¼			
540	54003Y		1 7/16			
540	54004Y		1½			
541	54101Y	29	1	6.98/177,2	7.03/178,5	3.61/91,8
541	54102Y		1¼			
541	54103Y		1 7/16			
541	54104Y		1½			

Split idler sprocket, machined

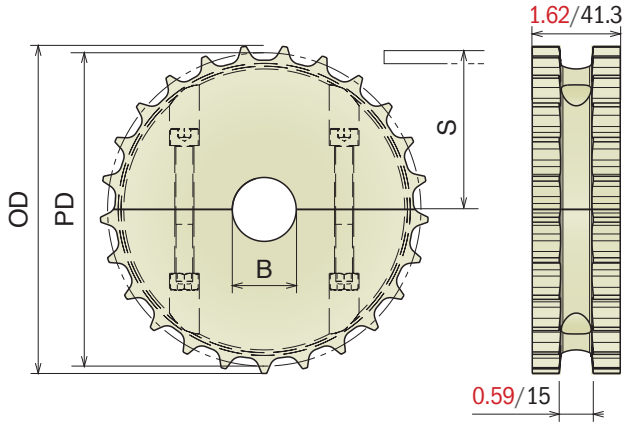

Part	Article-Nr.	Z-	Bore in	PD in-mm	OD in-mm	S in-mm
535	53550	17	0.71*	4.15/105,5	4.09/103,9	2.20/55,9
535	53551Y		1			
535	53552Y		1¼			
535	53553Y		1 7/16			
535	53554Y		1½			
536	53650	19	0.71*	4.62/117,3	4.61/117,0	2.44/61,9
536	53651Y		1			
536	53652Y		1¼			
536	53653Y		1 7/16			
536	53654Y		1½			
537	53750	21	0.71*	5.09/129,3	5.08/129,0	2.67/67,8
537	53751Y		1			
537	53752Y		1¼			
537	53753Y		1 7/16			
537	53754Y		1½			
538	53850	23	0.71*	5.56/141,2	5.60/142,0	2.90/73,8
538	53851Y		1			
538	53852Y		1¼			
538	53853Y		1 7/16			
538	53854Y		1½			
539	53950	25	0.71*	6.03/153,2	6.06/154,0	3.14/79,8
539	53951Y		1			
539	53952Y		1¼			
539	53953Y		1 7/16			
539	53954Y		1½			
540	54050	27	0.71*	6.50/165,2	6.57/166,8	3.38/85,8
540	54051Y		1			
540	54052Y		1¼			
540	54053Y		1 7/16			
540	54054Y		1½			
541	54150	29	0.71*	6.98/177,2	7.03/178,5	3.61/91,8
541	54151Y		1			
541	54152Y		1¼			
541	54153Y		1 7/16			
541	54154Y		1½			

*Plain Bore

Material: Reinforced polyamide
Screws: Stainless steel
Nuts: Zinc plated steel

820-831

Split drive sprocket, molded

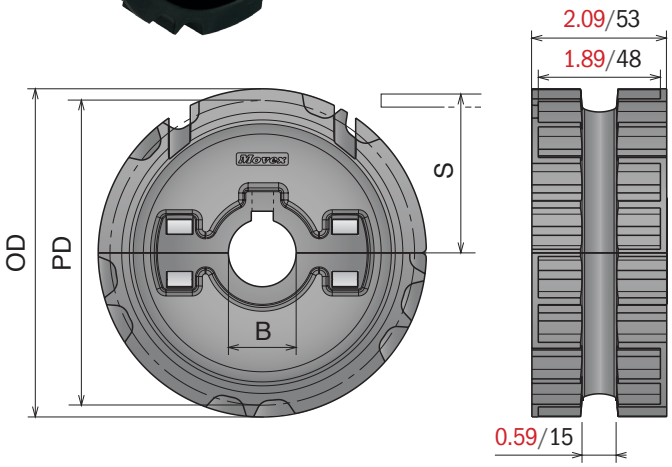

Part	Article-Nr.	Z-	Bore in	PD in-mm	OD in-mm	S in-mm
542	54201Y	21	1	5.09/129,3	5.08/129,0	2.67/67,8
542	54202Y		1¼			
542	54203Y		1 7/16			
542	54204Y		1½			
543	54301Y	23	1	5.56/141,2	5.60/142,0	2.90/73,8
543	54302Y		1¼			
543	54303Y		1 7/16			
543	54304Y		1½			
544	54401Y	25	1	6.03/153,2	6.06/154,0	3.14/79,8
544	54402Y		1¼			
544	54403Y		1 7/16			
544	54404Y		1½			

Improved Design and Performance

Split idler sprocket, molded

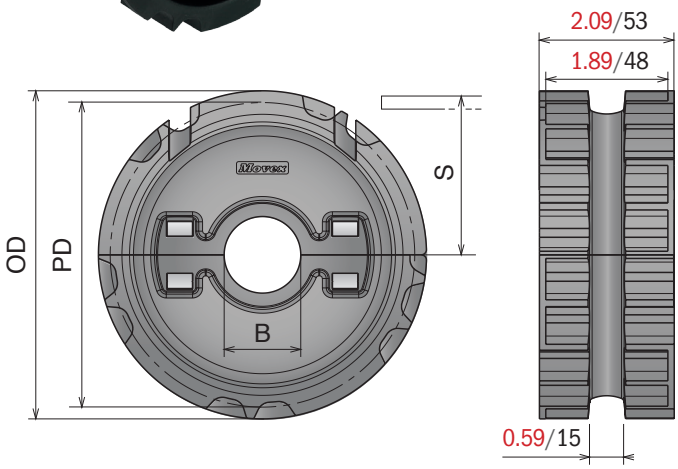

Part	Article-Nr.	Z-	Bore in	PD in-mm	OD in-mm	S in-mm
542	54251Y	21	1	5.09/129,3	5.08/129,0	2.67/67,8
542	54252Y		1¼			
542	54253Y		1 7/16			
542	54254Y		1½			
543	54351Y	23	1	5.56/141,2	5.60/142,0	2.90/73,8
543	54352Y		1¼			
543	54353Y		1 7/16			
543	54354Y		1½			
544	54451Y	25	1	6.03/153,2	6.06/154,0	3.14/79,8
544	54452Y		1¼			
544	54453Y		1 7/16			
544	54454Y		1½			

Improved Design and Performance

Material: Polyamide
Screws: Stainless steel
Nuts: Zinc plated steel

880 Split drive sprocket, machined

Also suitable for Series 828 - 878 - 879 M - 879 TAB

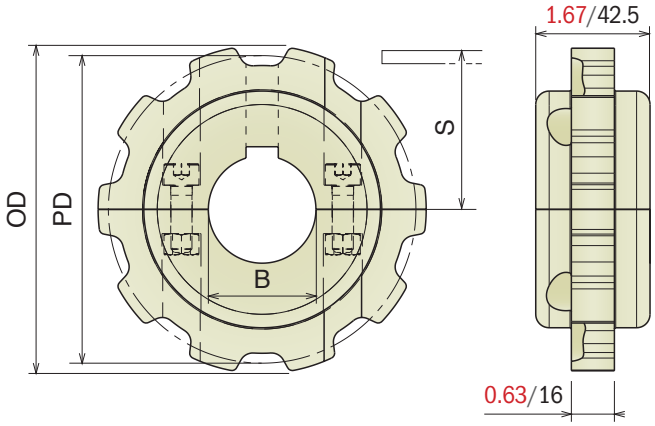

Part	Article-Nr.	Z-	Bore in	PD in-mm	OD in-mm	S in-mm
545	54501Y	9	1	4.38/111,4	4.33/110,0	2.33/59,3
545	54502Y		1¼			
545	54503Y		1 7/16			
545	54504Y		1½			
546	54601Y	10	1	4.85/123,3	4.80/122,0	2.57/65,25
546	54602Y		1¼			
546	54603Y		1 7/16			
546	54604Y		1½			
547	54701Y	11	1	5.32/135,2	5.31/135,0	2.80/71,2
547	54702Y		1¼			
547	54703Y		1 7/16			
547	54704Y		1½			
548	54801Y	12	1	5.79/147,2	5.80/147,3	3.04/77,2
548	54802Y		1¼			
548	54803Y		1 7/16			
548	54804Y		1½			

Split idler sprocket, machined

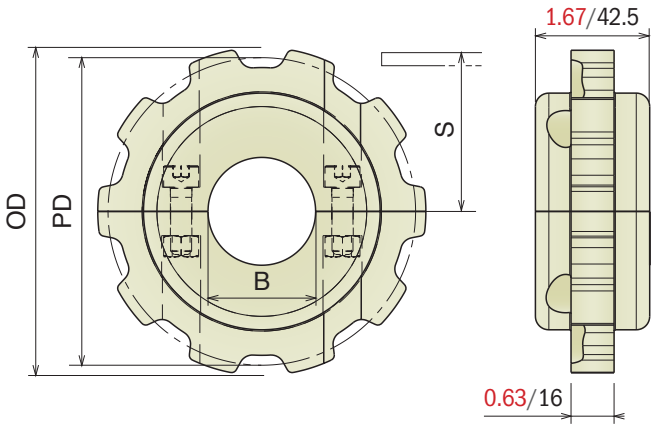

Part	Article-Nr.	Z-	Bore in	PD in-mm	OD in-mm	S in-mm
545	54550	9	0.71*	4.38/111,4	4.33/110,0	2.33/59,3
545	54551Y		1			
545	54552Y		1¼			
545	54553Y		1 7/16			
545	54554Y		1½			
546	54650	10	0.71*	4.85/123,3	4.80/122,0	2.57/65,25
546	54651Y		1			
546	54652Y		1¼			
546	54653Y		1 7/16			
546	54654Y		1½			
547	54750	11	0.71*	5.32/135,2	5.31/135,0	2.80/71,2
547	54751Y		1			
547	54752Y		1¼			
547	54753Y		1 7/16			
547	54754Y		1½			
548	54850	12	0.71*	5.79/147,2	5.80/147,3	3.04/77,2
548	54851Y		1			
548	54852Y		1¼			
548	54853Y		1 7/16			
548	54854Y		1½			

*Plain Bore

Material: Reinforced polyamide
Screws: Stainless steel
Nuts: Zinc plated steel

880

Split drive sprocket, molded

Also suitable for Series 828 - 878 - 879 M - 879 TAB

Part	Article-Nr.	Z-	Bore in	PD in-mm	OD in-mm	S in-mm
549	54901Y	10	1	4.85/123,3	4.80/122,0	2.57/65,25
549	54902Y		1¼			
549	54903Y		1 7/16			
549	54904Y		1½			
550	55001Y	12	1	5.79/147,2	5.80/147,3	3.04/77,2
550	55002Y		1¼			
550	55003Y		1 7/16			
550	55004Y		1½			

Improved Design and Performance

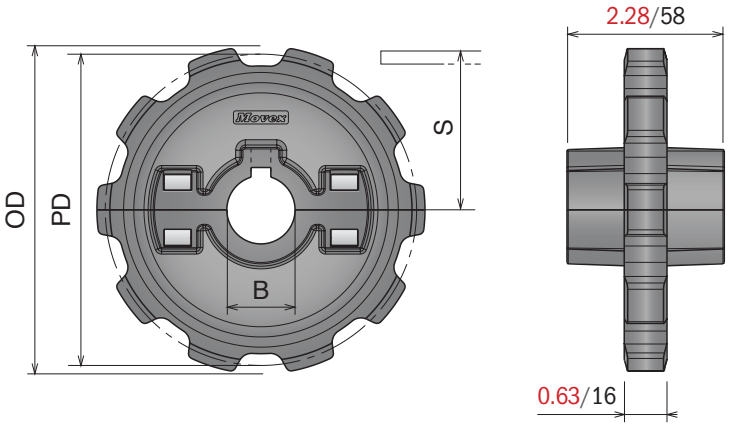

Split idler sprocket, molded

Part	Article-Nr.	Z-	Bore in	PD in-mm	OD in-mm	S in-mm
549	54951Y	10	1	4.85/123,3	4.80/122,0	2.57/65,25
549	54952Y		1¼			
549	54953Y		1 7/16			
549	54954Y		1½			
550	55051Y	12	1	5.79/147,2	5.80/147,3	3.04/77,2
550	55052Y		1¼			
550	55053Y		1 7/16			
550	55054Y		1½			

Improved Design and Performance

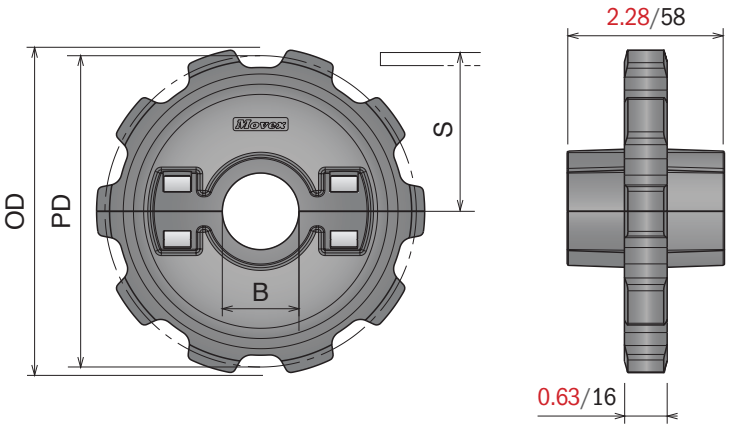

Material: Polyamide
Screws: Stainless steel
Nuts: Zinc plated steel

882 Split drive sprocket, machined

Also suitable for Series 8257

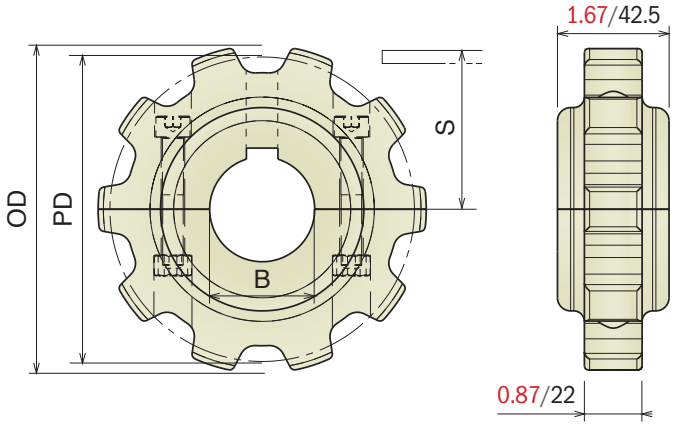

Part	Article-Nr.	Z-	Bore in	PD in-mm	OD in-mm	S in-mm
551	55101Y	9	1	4.38/111,4	4.41/112,0	2.38/60,5
551	55102Y		1¼			
551	55103Y		1 7/16			
551	55104Y		1½			
552	55201Y	10	1	4.85/123,3	4.92/125,0	2.61/66,4
552	55202Y		1¼			
552	55203Y		1 7/16			
552	55204Y		1½			
553	55301Y	11	1	5.32/135,2	5.39/137,0	2.85/72,4
553	55302Y		1¼			
553	55303Y		1 7/16			
553	55304Y		1½			
554	55401Y	12	1	5.79/147,2	5.87/149,0	3.09/78,4
554	55402Y		1¼			
554	55403Y		1 7/16			
554	55404Y		1½			

Split idler sprocket, machined

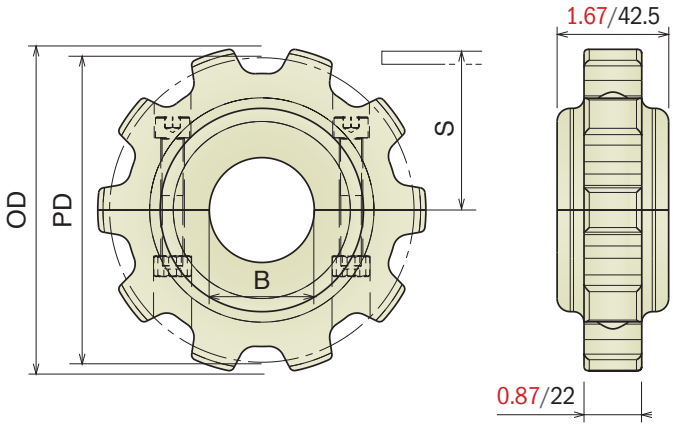

Part	Article-Nr.	Z-	Bore in	PD in-mm	OD in-mm	S in-mm
551	55150	9	0.71*	4.38/111,4	4.41/112,0	2.38/60,5
551	55151Y		1			
551	55152Y		1¼			
551	55153Y		1 7/16			
551	55154Y		1½			
552	55250	10	0.71*	4.85/123,3	4.92/125,0	2.61/66,4
552	55251Y		1			
552	55252Y		1¼			
552	55253Y		1 7/16			
552	55254Y		1½			
553	55350	11	0.71*	5.32/135,2	5.39/137,0	2.85/72,4
553	55351Y		1			
553	55352Y		1¼			
553	55353Y		1 7/16			
553	55354Y		1½			
554	55450	12	0.71*	5.79/147,2	5.87/149,0	3.09/78,4
554	55451Y		1			
554	55452Y		1¼			
554	55453Y		1 7/16			
554	55454Y		1½			

*Plain Bore

Material: Reinforced polyamide
Screws: Stainless steel
Nuts: Zinc plated steel

882 *Split drive sprocket, molded*

Also suitable for Series 8257

Part	Article-Nr.	Z-	Bore in	PD in-mm	OD in-mm	S in-mm
555	55501Y	10	1	4.85/123,3	4.92/125,0	2.61/66,4
555	55502Y		1¼			
555	55503Y		1 7/16			
555	55504Y		1½			
556	55601Y	12	1	5.79/147,2	5.87/149,0	3.09/78,4
556	55602Y		1¼			
556	55603Y		1 7/16			
556	55604Y		1½			

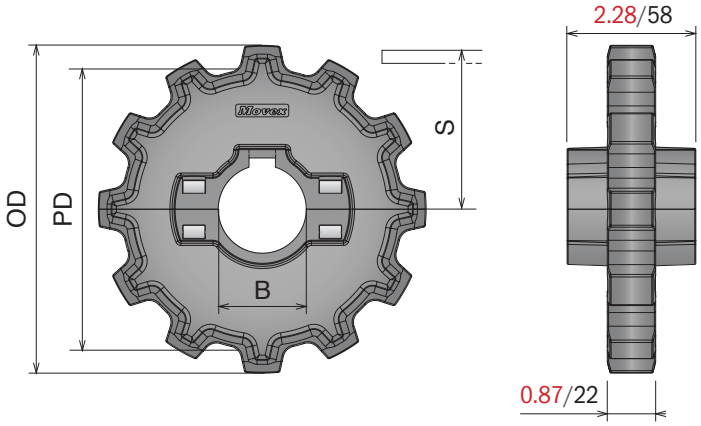

Split idler sprocket, molded

Part	Article-Nr.	Z-	Bore in	PD in-mm	OD in-mm	S in-mm
555	55551Y	10	1	4.85/123,3	4.92/125,0	2.61/66,4
555	55552Y		1¼			
555	55553Y		1 7/16			
555	55554Y		1½			
556	55651Y	12	1	5.79/147,2	5.87/149,0	3.09/78,4
556	55652Y		1¼			
556	55653Y		1 7/16			
556	55654Y		1½			

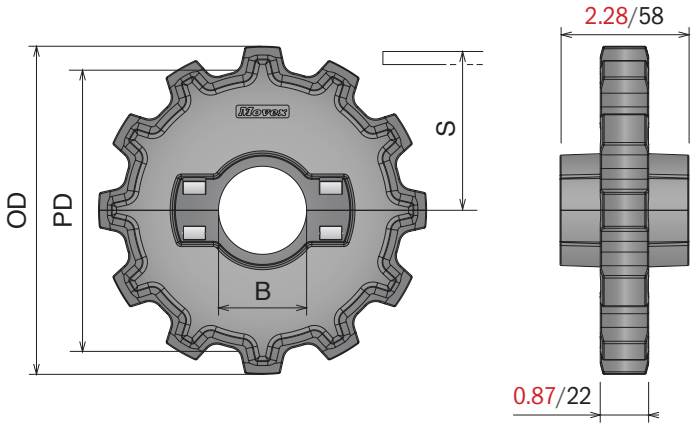

Material: Polyamide
Screws: Stainless steel
Nuts: Zinc plated steel

512 Split drive sprocket, machined

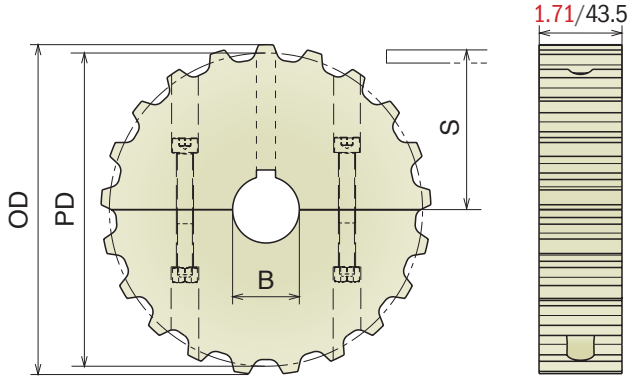

Part	Article-Nr.	Z-	Bore in	PD in-mm	OD in-mm	S in-mm
557	55701Y	13	1	4.25/108,0	4.18/106,1	2.25/57,2
557	55702Y		1¼			
557	55703Y		1 7/16			
557	55704Y		1½			
558	55801Y	15	1	4.88/124,0	4.81/122,2	2.57/65,2
558	55802Y		1¼			
558	55803Y		1 7/16			
558	55804Y		1½			
559	55901Y	17	1	5.44/138,2	5.44/138,2	2.85/72,3
559	55902Y		1¼			
559	55903Y		1 7/16			
559	55904Y		1½			
560	56001Y	18	1	5.76/146,3	5.76/146,4	3.01/76,4
560	56002Y		1¼			
560	56003Y		1 7/16			
560	56004Y		1½			
561	56101Y	19	1	6.07/154,3	6.13/155,7	3.16/80,4
561	56102Y		1¼			
561	56103Y		1 7/16			
561	56104Y		1½			
562	56201Y	21	1	6.71/170,4	6.81/173,0	3.48/88,4
562	56202Y		1¼			
562	56203Y		1 7/16			
562	56204Y		1½			
563	56301Y	23	1	7.34/186,5	7.48/190,0	3.80/96,5
563	56302Y		1¼			
563	56303Y		1 7/16			
563	56304Y		1½			
564	56401Y	25	1	7.98/202,7	8.03/204,0	4.12/104,6
564	56402Y		1¼			
564	56403Y		1 7/16			
564	56404Y		1½			

Split idler sprocket, machined

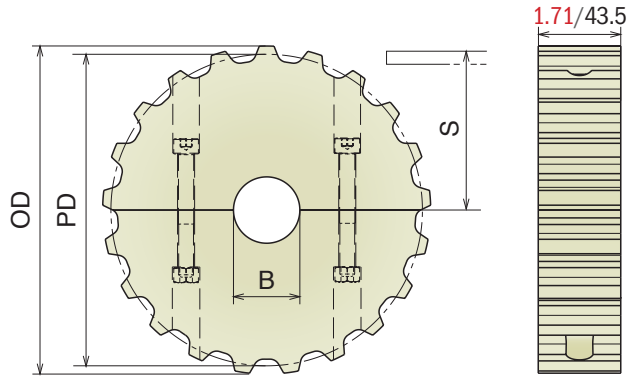

Part	Article-Nr.	Z-	Bore in	PD in-mm	OD in-mm	S in-mm
557	55750	13	0.71*	4.25/108,0	4.18/106,1	2.25/57,2
557	55751Y		1			
557	55752Y		1¼			
557	55753Y		1 7/16			
557	55754Y		1½			
558	55850	15	0.71*	4.88/124,0	4.81/122,2	2.57/65,2
558	55851Y		1			
558	55852Y		1¼			
558	55853Y		1 7/16			
558	55854Y		1½			
559	55950	17	0.71*	5.44/138,2	5.44/138,2	2.85/72,3
559	55951Y		1			
559	55952Y		1¼			
559	55953Y		1 7/16			
559	55954Y		1½			
560	56050	18	0.71*	5.76/146,3	5.76/146,4	3.01/76,4
560	56051Y		1			
560	56052Y		1¼			
560	56053Y		1 7/16			
560	56054Y		1½			
561	56150	19	0.71*	6.07/154,3	6.13/155,7	3.16/80,4
561	56151Y		1			
561	56152Y		1¼			
561	56153Y		1 7/16			
561	56154Y		1½			
562	56250	21	0.71*	6.71/170,4	6.81/173,0	3.48/88,4
562	56251Y		1			
562	56252Y		1¼			
562	56253Y		1 7/16			
562	56254Y		1½			
563	56350	23	0.71*	7.34/186,5	7.48/190,0	3.80/96,5
563	56351Y		1			
563	56352Y		1¼			
563	56353Y		1 7/16			
563	56354Y		1½			
564	56450	25	0.71*	7.98/202,7	8.03/204,0	4.12/104,6
564	56451Y		1			
564	56452Y		1¼			
564	56453Y		1 7/16			
564	56454Y		1½			

*Plain Bore

Material: Polyamide
Guides & Screws: Stainless steel
Nuts: Zinc plated steel

815

Split sprocket with guides, machined

Anelli Inox / SS Guide-rings / Edelstahl Bordscheibe

Part	Article-Nr.	Z-	Bore in	PD in-mm	OD in-mm	S in-mm	Ø screw in-mm
503	50301GY	21	1	5.09/129,3	5.08/129,0	2.67/67,8	4.09/104,0
503	50302GY		1¼				
503	50303GY		1 7/16				
503	50304GY		1½				
504	50401GY	23	1	5.56/141,2	5.60/142,0	2.90/73,8	4.57/116,0
504	50402GY		1¼				
504	50403GY		1 7/16				
504	50404GY		1½				
505	50501GY	25	1	6.03/153,2	6.06/154,0	3.14/79,8	5.04/128,0
505	50502GY		1¼				
505	50503GY		1 7/16				
505	50504GY		1½				

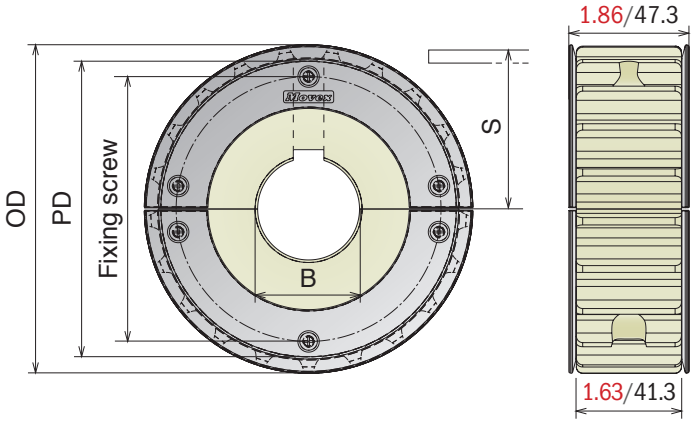

8157

Split sprocket with guides, machined

Anelli Inox / SS Guide-rings / Edelstahl Bordscheibe

Part	Article-Nr.	Z-	Bore in	PD in-mm	OD in-mm	S in-mm	Ø screw in-mm
530	53001GY	21	1	5.09/129,3	5.08/129,0	2.67/67,8	4.09/104,0
530	53002GY		1¼				
530	53003GY		1 7/16				
530	53004GY		1½				
531	53101GY	23	1	5.56/141,2	5.60/142,0	2.90/73,8	4.57/116,0
531	53102GY		1¼				
531	53103GY		1 7/16				
531	53104GY		1½				
532	53201GY	25	1	6.03/153,2	6.06/154,0	3.14/79,8	5.04/128,0
532	53202GY		1¼				
532	53203GY		1 7/16				
532	53204GY		1½				

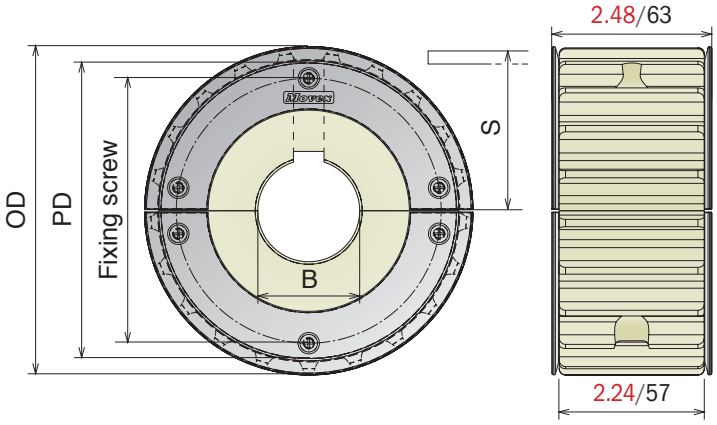

Material: Polyamide
Guides & Screws: Stainless steel
Nuts: Zinc plated steel

805 Split sprocket with guides, machined

Anelli Inox / SS Guide-rings / Edelstahl Bordscheibe

Part	Article-Nr.	Z-	Bore in	PD in-mm	OD in-mm	S in-mm	Ø screw in-mm
523	52301GY	21	1	5.09/129,3	5.08/129,0	2.67/67,8	4.09/104,0
523	52302GY		1¼				
523	52303GY		1 7/16				
523	52304GY		1½				
524	52401GY	23	1	5.56/141,2	5.60/142,0	2.90/73,8	4.57/116,0
524	52402GY		1¼				
524	52403GY		1 7/16				
524	52404GY		1½				
525	52501GY	25	1	6.03/153,2	6.06/154,0	3.14/79,8	5.04/128,0
525	52502GY		1¼				
525	52503GY		1 7/16				
525	52504GY		1½				

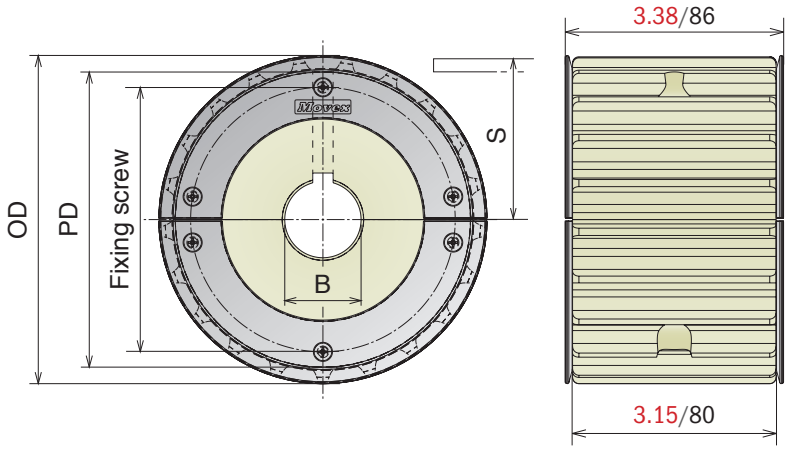

820 Split sprocket with guides, machined

Anelli Inox / SS Guide-rings / Edelstahl Bordscheibe

Part	Article-Nr.	Z-	Bore in	PD in-mm	OD in-mm	S in-mm	Ø screw in-mm
537	53701GY	21	1	5.09/129,3	5.08/129,0	2.67/67,8	4.09/104,0
537	53702GY		1¼				
537	53703GY		1 7/16				
537	53704GY		1½				
538	53801GY	23	1	5.56/141,2	5.60/142,0	2.90/73,8	4.57/116,0
538	53802GY		1¼				
538	53803GY		1 7/16				
538	53804GY		1½				
539	53901GY	25	1	6.03/153,2	6.06/154,0	3.14/79,8	5.04/128,0
539	53902GY		1¼				
539	53903GY		1 7/16				
539	53904GY		1½				

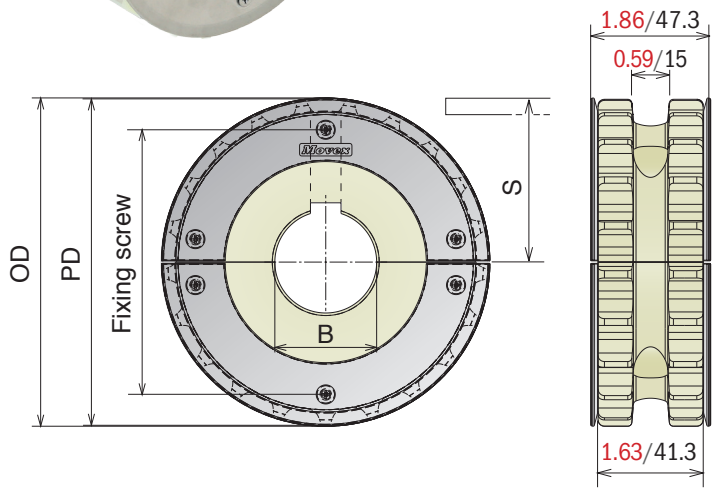

Material: Polyamide
Screws: Stainless steel
Nuts: Zinc plated steel

815 MINI

Split drive sprocket, machined

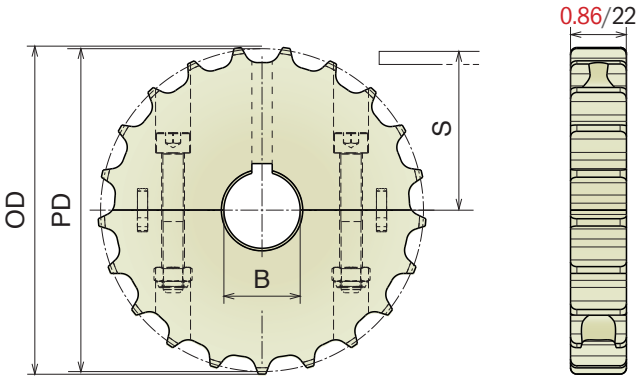

Part	Article-Nr.	Z-	Bore in	PD in-mm	OD in-mm	S in-mm
580	58001Y	19	1	4.62/117,3	4.60/117,0	2.43/61,9
580	58002Y		1¼			
580	58003Y		1 7/16			
580	58004Y		1½			
581	58101Y	21	1	5.09/129,3	5.08/129,0	2.67/67,8
581	58102Y		1¼			
581	58103Y		1 7/16			
581	58104Y		1½			
582	58201Y	23	1	5.56/141,2	5.59/142,0	2.90/73,8
582	58202Y		1¼			
582	58203Y		1 7/16			
582	58204Y		1½			
583	58301Y	25	1	6.03/153,2	6.06/154,0	3.14/79,8
583	58302Y		1¼			
583	58303Y		1 7/16			
583	58304Y		1½			

Split idler sprocket, machined

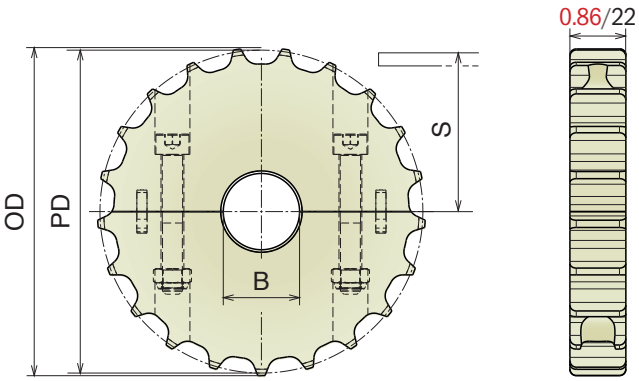

Part	Article-Nr.	Z-	Bore in	PD in-mm	OD in-mm	S in-mm
580	58050	19	0.71*	4.62/117,3	4.60/117,0	2.43/61,9
580	58051Y		1			
580	58052Y		1¼			
580	58053Y		1 7/16			
580	58054Y		1½			
581	58150	21	0.71*	5.09/129,3	5.08/129,0	2.67/67,8
581	58151Y		1			
581	58152Y		1¼			
581	58153Y		1 7/16			
581	58154Y		1½			
582	58250	23	0.71*	5.56/141,2	5.59/142,0	2.90/73,8
582	58251Y		1			
582	58252Y		1¼			
582	58253Y		1 7/16			
582	58254Y		1½			
583	58350	25	0.71*	6.03/153,2	6.06/154,0	3.14/79,8
583	58351Y		1			
583	58352Y		1¼			
583	58353Y		1 7/16			
583	58354Y		1½			

*Plain Bore

Material: *Polyamide*
Screws: Stainless steel
Nuts: Zinc plated steel

CC 600

Split idler sprocket, machined

For adequate quantities these sprockets can be delivered with finished bore.

Part	Article-Nr.	Z-	Bore in	PD in-mm	OD in-mm
565	56550Y	8	0.79/20	6.53/166,0	6.77/172,0
566	56650Y	10	0.79/20	8.07/205,0	8.46/215,0
567	56750Y	12	0.79/20	9.69/246,0	10.08/256,0
568	56850Y	14	0.79/20	11.26/286,0	11.69/297,0

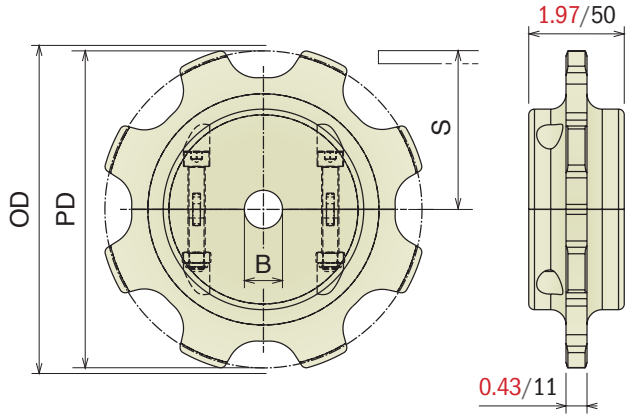

CC 1400

Split idler sprocket, machined

For adequate quantities these sprockets can be delivered with finished bore.

Part	Article-Nr.	Z-	Bore in	PD in-mm	OD in-mm
570	57050E	7	0.79/20	7.48/190,0	7.95/202,0
571	57150E	8	0.79/20	8.58/218,0	8.96/227,6
572	57250E	10	0.79/20	10.51/267,0	10.98/279,0

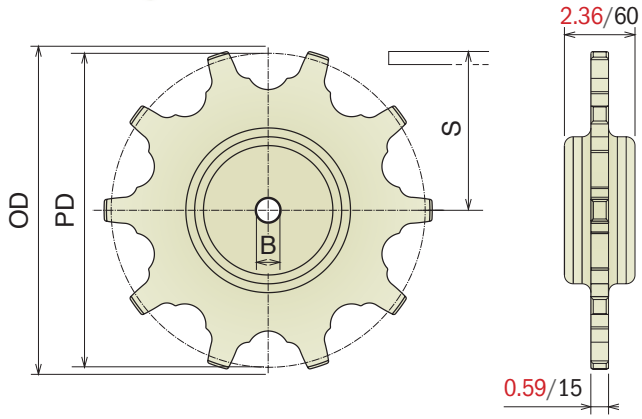

Material: Polyamide
Screws: Stainless steel
Nuts: Zinc plated steel

1701-1706

Split drive sprocket, machined

Part	Article-Nr.	Z-	Bore in	PD in-mm	OD in-mm	S in-mm
573	57301Y	8	1	5.14/130,7	5.36/136,3	2.08/53,0
573	57302Y		1¼			
573	57303Y		1 7/16			
573	57304Y		1½			
574	57401Y	10	1	6.37/161,8	6.50/165,1	2.71/69,0
574	57402Y		1¼			
574	57403Y		1 7/16			
574	57404Y		1½			
575	57501Y	13	1	8.22/208,9	8.46/215,0	3.68/93,5
575	57502Y		1¼			
575	57503Y		1 7/16			
575	57504Y		1½			

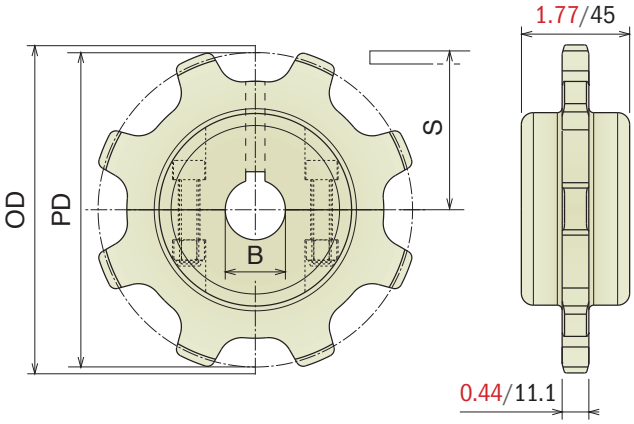

Split idler sprocket, machined

Part	Article-Nr.	Z-	Bore in	PD in-mm	OD in-mm	S in-mm
573	57350	8	0.71*	5.14/130,7	5.36/136,3	2.08/53,0
573	57351Y		1			
573	57352Y		1¼			
573	57353Y		1 7/16			
573	57354Y		1½			
574	57450	10	0.71*	6.37/161,8	6.50/165,1	2.71/69,0
574	57451Y		1			
574	57452Y		1¼			
574	57453Y		1 7/16			
574	57454Y		1½			
575	57550	13	0.71*	8.22/208,9	8.46/215,0	3.68/93,5
575	57551Y		1			
575	57552Y		1¼			
575	57553Y		1 7/16			
575	57554Y		1½			

*Plain Bore

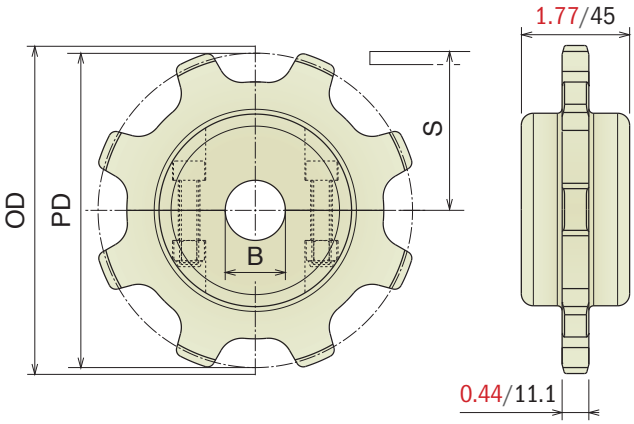

Movex®

movexii.com

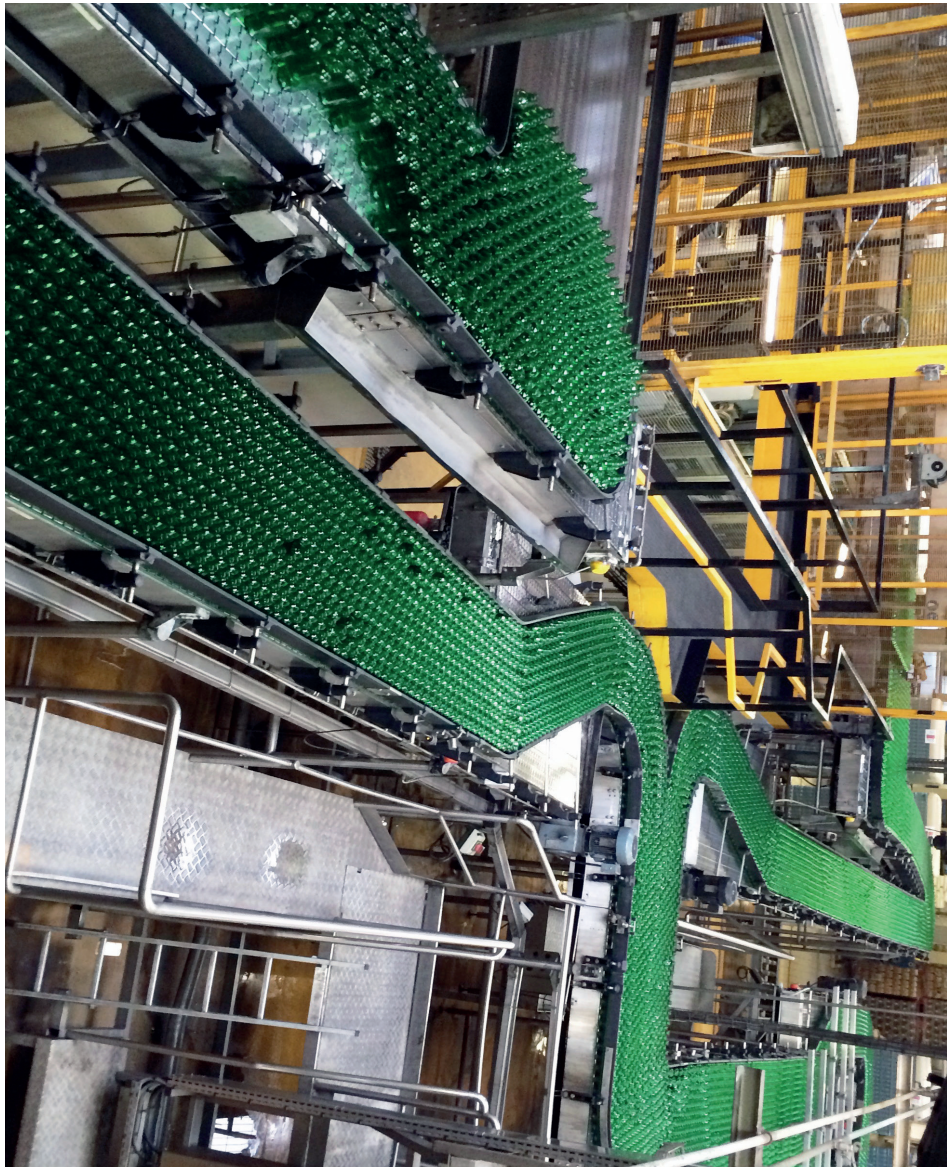

97

Chain idler wheels

815

Pag 98

815

Pag 98

805

Pag 99

821

Pag 99

881 TAB

Pag 100

882 M

Pag 100

Material: Polyamide
Screws: Stainless steel
Nuts: Zinc plated steel for machined / nickel plated brass for molded

815 Split idler wheel, machined

Also suitable for Series 881 M - 820 - 831 - 828 - 879 M - 880 M

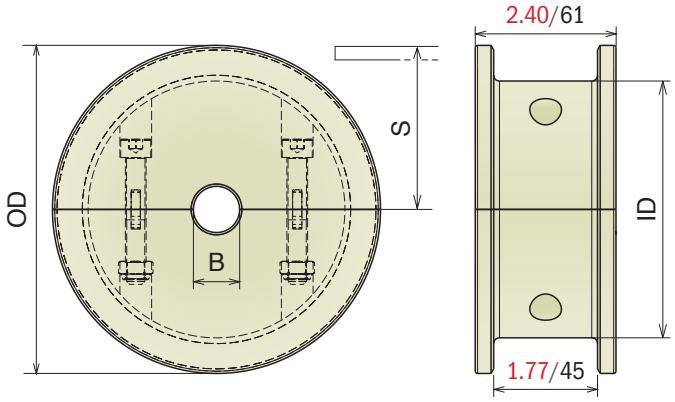

Part	Article-Nr.	ecq. Z-	Bore in	OD in-mm	ID in-mm	S in-mm
601	60100	17	0.79	4.09/104,0	2.96/75,2	2.21/56,2
601	60101Y		1			
601	60102Y		1¼			
601	60103Y		1 7/16			
601	60104Y		1½			
602	60200	19	0.79	4.61/117,0	3.63/92,2	2.46/62,6
602	60201Y		1			
602	60202Y		1¼			
602	60203Y		1 7/16			
602	60204Y		1½			
603	60300	21	0.79	5.11/129,8	4.13/105,0	2.70/68,6
603	60301Y		1			
603	60302Y		1¼			
603	60303Y		1 7/16			
603	60304Y		1½			
604	60400	23	0.79	5.60/142,2	4.38/111,3	2.94/74,6
604	60401Y		1			
604	60402Y		1¼			
604	60403Y		1 7/16			
604	60404Y		1½			
605	60500	25	0.79	6.09/154,7	4.91/124,7	3.17/80,5
605	60501Y		1			
605	60502Y		1¼			
605	60503Y		1 7/16			
605	60504Y		1½			
606	60600	27	0.79	6.58/167,2	5.31/135,0	3.48/88,5
606	60601Y		1			
606	60602Y		1¼			
606	60603Y		1 7/16			
606	60604Y		1½			
607	60700	29	0.79	7.06/179,3	5.51/140,0	3.65/92,8
607	60701Y		1			
607	60702Y		1¼			
607	60703Y		1 7/16			
607	60704Y		1½			

815 Split idler wheel, molded

Also suitable for Series 881 M - 820 - 831 - 828 - 879 M - 880 M

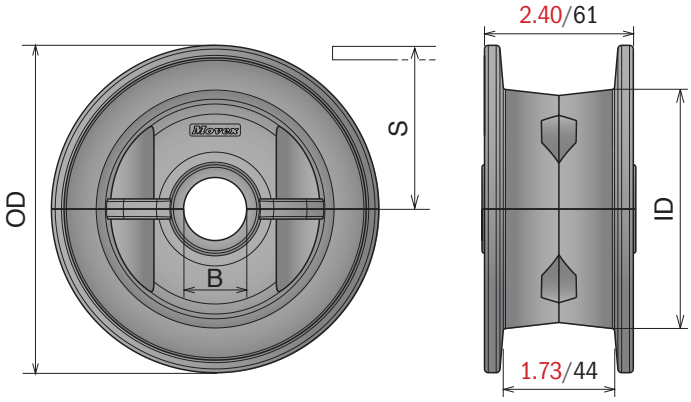

Part	Article-Nr.	ecq. Z-	Bore in	OD in-mm	ID in-mm	S in-mm
608	60801Y	21	1	5.11/129,8	3.73/94,8	2.70/68,6
608	60802Y		1¼			
608	60803Y		1 7/16			
608	60804Y		1½			
609	60901Y	23	1	5.60/142,2	3.91/99,3	2.94/74,6
609	60902Y		1¼			
609	60903Y		1 7/16			
609	60904Y		1½			
610	61001Y	25	1	6.09/154,7	4.01/102,0	3.17/80,5
610	61002Y		1¼			
610	61003Y		1 7/16			
610	61004Y		1½			

Material: Polyamide
Screws: Stainless steel
Nuts: Zinc plated steel

805

Split idler wheel, machined

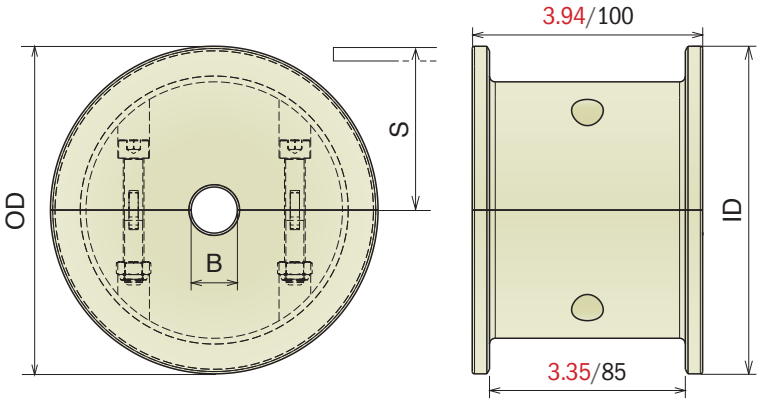

Part	Article-Nr.	ecq. Z-	Bore in	OD in-mm	ID in-mm	S in-mm
611	61100	17	0.79	4.09/104,0	2.96/75,2	2.21/56,2
611	61101Y		1			
611	61102Y		1¼			
611	61103Y		1 7/16			
611	61104Y		1½			
612	61200	19	0.79	4.61/117,0	3.63/92,2	2.46/62,6
612	61201Y		1			
612	61202Y		1¼			
612	61203Y		1 7/16			
612	61204Y		1½			
613	61300	21	0.79	5.11/129,8	4.13/105,0	2.70/68,6
613	61301Y		1			
613	61302Y		1¼			
613	61303Y		1 7/16			
613	61304Y		1½			
614	61400	23	0.79	5.60/142,2	4.38/111,3	2.94/74,6
614	61401Y		1			
614	61402Y		1¼			
614	61403Y		1 7/16			
614	61404Y		1½			
615	61500	25	0.79	6.09/154,7	4.91/124,7	3.17/80,5
615	61501Y		1			
615	61502Y		1¼			
615	61503Y		1 7/16			
615	61504Y		1½			
616	61600	27	0.79	6.58/167,2	5.31/135,0	3.48/88,5
616	61601Y		1			
616	61602Y		1¼			
616	61603Y		1 7/16			
616	61604Y		1½			
617	61700	29	0.79	7.06/179,3	5.51/140,0	3.65/92,8
617	61701Y		1			
617	61702Y		1¼			
617	61703Y		1 7/16			
617	61704Y		1½			

821

Split idler wheel, machined

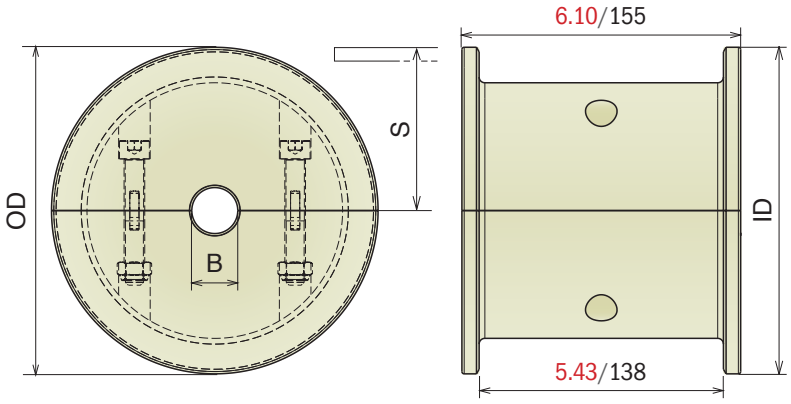

Part	Article-Nr.	ecq. Z-	Bore in	OD in-mm	ID in-mm	S in-mm
625	62500	19	0.79	4.61/117,0	3.63/92,2	2.46/62,6
625	62501Y		1			
625	62502Y		1¼			
625	62503Y		1 7/16			
625	62504Y		1½			
626	62600	21	0.79	5.11/129,8	4.13/105,0	2.70/68,6
626	62601Y		1			
626	62602Y		1¼			
626	62603Y		1 7/16			
626	62604Y		1½			
627	62700	23	0.79	5.60/142,2	4.38/111,3	2.94/74,6
627	62701Y		1			
627	62702Y		1¼			
627	62703Y		1 7/16			
627	62704Y		1½			
628	62800	25	0.79	6.09/154,7	4.91/124,7	3.17/80,5
628	62801Y		1			
628	62802Y		1¼			
628	62803Y		1 7/16			
628	62804Y		1½			

881 TAB-882 M

Chain idler wheels

Material: *Polyamide*
Screws: Stainless steel
Nuts: Zinc plated steel

881 TAB

Split idler wheel, machined

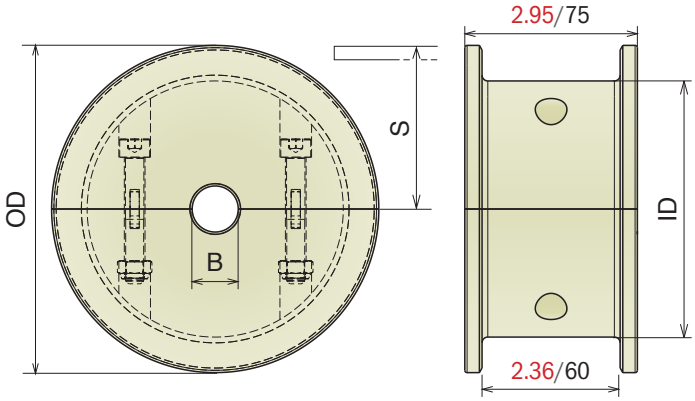

Part	Article-Nr.	ecq. Z-	Bore in	OD in-mm	ID in-mm	S in-mm
618	61800	17	0.79	4.09/104,0	2.60/66,0	2.21/56,2
618	61801Y		1			
618	61802Y		1¼			
618	61803Y		1 7/16			
618	61804Y		1½			
619	61900	19	0.79	4.61/117,0	2.95/75,0	2.46/62,6
619	61901Y		1			
619	61902Y		1¼			
619	61903Y		1 7/16			
619	61904Y		1½			
620	62000	21	0.79	5.11/129,8	3.74/95,0	2.70/68,6
620	62001Y		1			
620	62002Y		1¼			
620	62003Y		1 7/16			
620	62004Y		1½			
621	62100	23	0.79	5.60/142,2	4.25/108,0	2.94/74,6
621	62101Y		1			
621	62102Y		1¼			
621	62103Y		1 7/16			
621	62104Y		1½			
622	62200	25	0.79	6.09/154,7	4.41/112,0	3.17/80,5
622	62201Y		1			
622	62202Y		1¼			
622	62203Y		1 7/16			
622	62204Y		1½			
623	62300	27	0.79	6.58/167,2	4.72/120,0	3.48/88,5
623	62301Y		1			
623	62302Y		1¼			
623	62303Y		1 7/16			
623	62304Y		1½			
624	62400	29	0.79	7.06/179,3	5.12/130,0	3.65/92,8
624	62401Y		1			
624	62402Y		1¼			
624	62403Y		1 7/16			
624	62404Y		1½			

882 M

Split idler wheel, machined

Also suitable for Series 8257 - 8157 - 8857 M

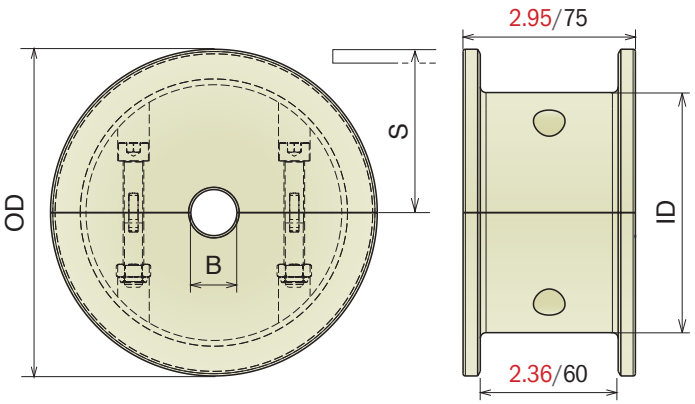

Part	Article-Nr.	ecq. Z-	Bore in	OD in-mm	ID in-mm	S in-mm
629	62900	17	0.79	4.09/104,0	2.96/75,2	2.21/56,2
629	62901Y		1			
629	62902Y		1¼			
629	62903Y		1 7/16			
629	62904Y		1½			
630	63000	19	0.79	4.61/117,0	3.63/92,2	2.46/62,6
630	63001Y		1			
630	63002Y		1¼			
630	63003Y		1 7/16			
630	63004Y		1½			
631	63100	21	0.79	5.11/129,8	4.13/105,0	2.70/68,6
631	63101Y		1			
631	63102Y		1¼			
631	63103Y		1 7/16			
631	63104Y		1½			
632	63200	23	0.79	5.60/142,2	4.38/111,3	2.94/74,6
632	63201Y		1			
632	63202Y		1¼			
632	63203Y		1 7/16			
632	63204Y		1½			
633	63300	25	0.79	6.09/154,7	4.91/124,7	3.17/80,5
633	63301Y		1			
633	63302Y		1¼			
633	63303Y		1 7/16			
633	63304Y		1½			
634	63400	27	0.79	6.58/167,2	5.31/135,0	3.48/88,5
634	63401Y		1			
634	63402Y		1¼			
634	63403Y		1 7/16			
634	63404Y		1½			
635	63500	29	0.79	7.06/179,3	5.51/140,0	3.65/92,8
635	63501Y		1			
635	63502Y		1¼			
635	63503Y		1 7/16			
635	63504Y		1½			

101

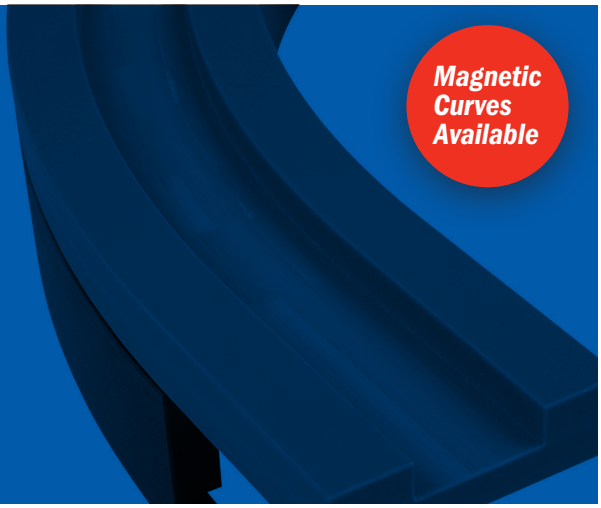

Corner Tracks

Movex Curves *are designed to offer better conveyor performance. Suitable for steel and plastic chains, our curves are produced with computer controlled machines with a smooth chain guide surface.*

Available in different materials and designs:
Standard UHMW-PE *(for standard applications)*
BluLub *(for limited or no lubrications)*
RS *(for high performance).*

Movex Curves *with* ***RS*** *and* ***BluLub*** *materials need less energy and with a lower coefficient of friction, improve product stability and chain wear-life. These curves are perfectly interchangeable with the standard design.*

TAB System

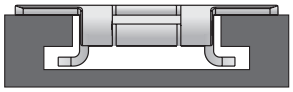

Upper Part

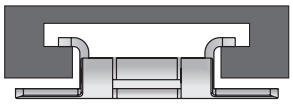

Return Part

Movex RS

Patented

High Performance Tracks

Magnetic Curves

Movex® *introduces a new magnetic curve* ***RS*** *in order to offer greater conveyor performance.*
The new product is equipped with wear-strips in ***BluLub****, an innovative high-tech material with solid lubricants.* ***BluLub*** *contributes to improved PV-properties compared to standard UHMW-PE curves especially in applications with limited lubrication, higher speeds and/or higher loads. Curves* ***RS*** *equipped with* ***BluLub*** *inserts, need less energy and with the lower coefficient of friction improve the product stability and wear-life of chains and belts. The new curves* ***RS*** *are perfectly interchangeable with the traditional versions.*

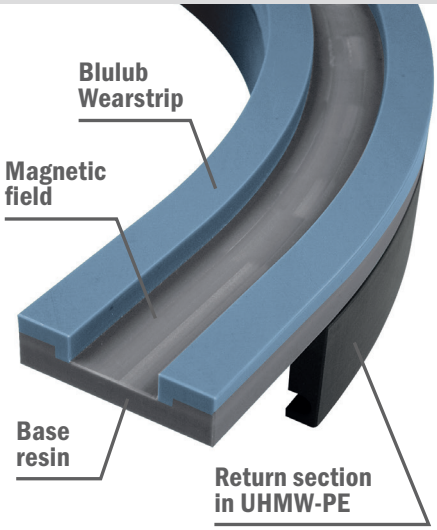

Advantages:

- **Less Noise**
- **Lower Friction**
- **Lower Wear**
- **Less Energy**

Material: Polyethylene UHMW-PE

Curves for TAB chains

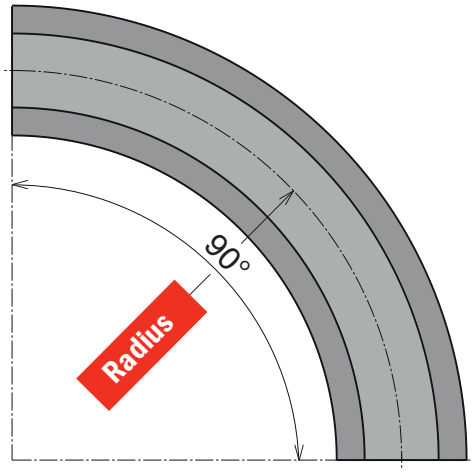

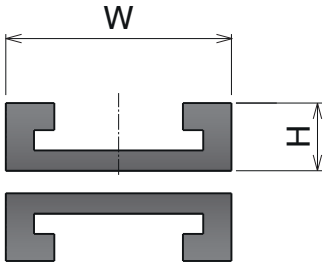

Tab System

Upper part available, on request, also in BluLub® and for abrasive applications.

Part	Article-Nr.	Chain	W	H	Radius	Carry Of Return
720	72021610Y	879 TAB K 3 1/4 880 TAB K 3 1/4 881 TAB K 3 1/4	3.75	1	18	
	72023610Y				24	
721	72123610Y	879 TAB K 4 1/2 880 TAB K 4 1/2 881 TAB K 4 1/2	5	1	24	
722	72223610Y	881 TAB K 7 1/2	8	1	24	
727	72723610Y	882 TAB K 4 1/2	5	1.188	24	
723	72323610Y	882 TAB K 7 1/2	8	1.188	24	
724	72423610Y	882 TAB K 10	10.5	1.188	24	
725	72523610Y	881 TAB K 12	12.5	1.188	24	
726	72621610Y	1873-1874 TAB K 3 1/4	3.75	1.375	18	
	72623610Y				24	
728	72821610Y	1873-1874 TAB K 4 1/2	5	1.375	18	
	72823610Y				24	
729	72921610Y	1873-1874 TAB K 6	6.5	1.375	18	
	72923610Y				24	
737	73721610Y	1873-1874 TAB K 7 1/2	8	1.375	18	
	73723610Y				24	
740	74020610Y	1843 TAB	2	1.375	10	
	74021610Y				18	
	74023610Y				24	
743	74320610Y	1701 TAB -1706 TAB	3.25	1.25	12	
	74321610Y				18	
	74323610Y				24	

Standard codes on table

add "**B**" for BluLub®

add "**C**" for abrasive

Material: Polyethylene UHMW-PE

Curves wear strip

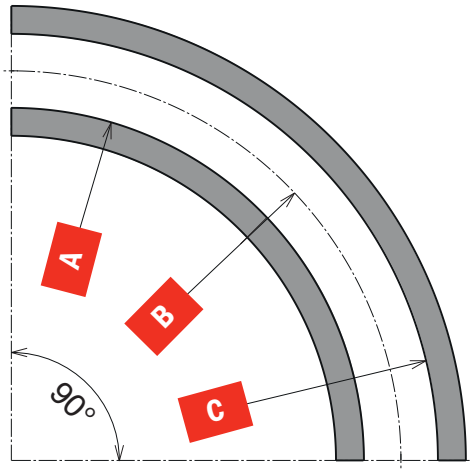

Tab System

Upper part available, on request, also in BluLub® and for abrasive applications.

Part	Article-Nr.	Type	A	B	C	W	T	Material
770	77031610Y	880 BEVEL	17 3/16	18	18 13/16	1	3/8	**Standard** codes on table
	77033610Y	880 BEVEL	23 3/16	24	24 13/16	1	3/8	
	77036610Y	880 BEVEL	29 3/16	30	30 13/16	1½	3/8	
771	77121610Y	880 TAB	17 1/8	18	18 7/8	1½	3/8	add "**B**" for BluLub®
	77123610Y	880 TAB	23 1/8	24	24 7/8	1½	3/8	
	77126610Y	880 TAB	29 1/8	30	30 7/8	1½	3/8	add "**C**" for abrasive
772	77223610Y	882 TAB	22 55/64	24	25 9/64	1½	5/8	
	77226610Y	882 TAB	28 25/64	30	31 9/64	1½	5/8	

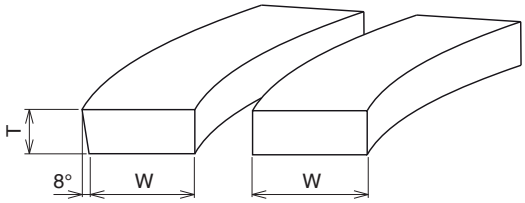

Material: Polyethylene UHMW-PE

Straight section for TAB chains

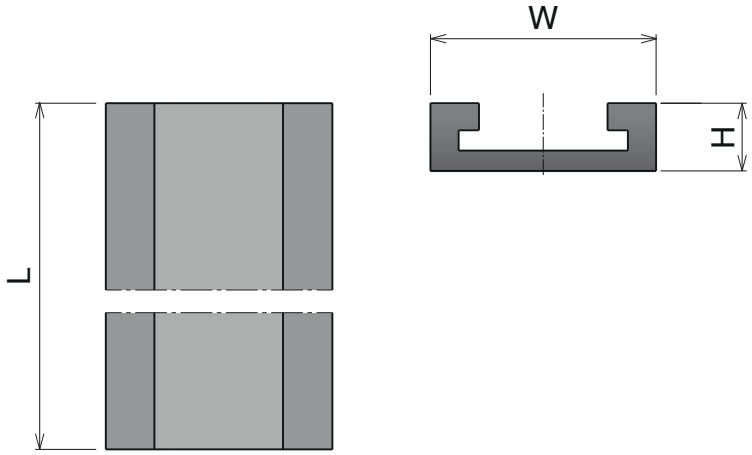

Tab System

Upper part available, on request, also in BluLub® and for abrasive applications.

Part	Article-Nr.	Chain	W	H	L (Feet)	Carry Of Return (in-mm)
790	79023010Y	879 TAB K 3 1/4	3.75	1	6	
		880 TAB K 3 1/4				
		881 TAB K 3 1/4				
790	79024010Y	879 TAB K 4 1/2	5	1	6	
		880 TAB K 4 1/2				
		881 TAB K 4 1/2				
790	79026010Y	881 TAB K 7 1/2	8	1	6	
791	79124010Y	882 TAB K 4 1/2	5	1.188	6	
	79126010Y	882 TAB K 7 1/2	8			
	79127010Y	882 TAB K 10	10.5			
	79128010Y	882 TAB K 12	12.5			
792	79223010Y	1873-1874 TAB K 3 1/4	3.75	1.375	6	
	79224010Y	1873-1874 TAB K 4 1/2	5			
	79225010Y	1873-1874 TAB K 6	6.5			
	79226010Y	1873-1874 TAB K 7 1/2	8			
793	79321010Y	1843 TAB	2	1	6	
795	79520010Y	1701-1706 TAB	3.25	1.25	6	

Material

Standard codes on table

add "**B**" for BluLub®

add "**C**" for abrasive

500

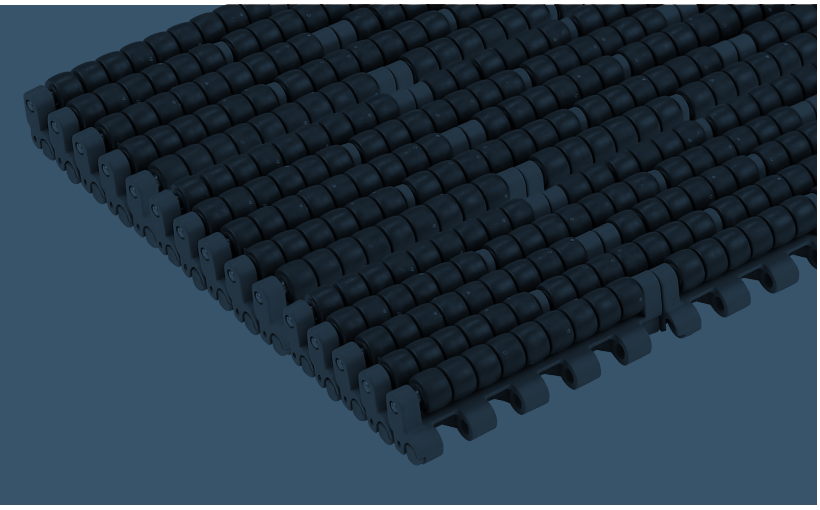

Modular belts

510

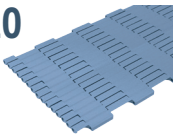

510 FT Pag 107

520/521

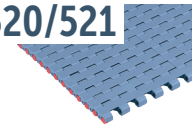

520 FT Pag 109

520 FTT Pag 110

520 FG Pag 111

520 GT Pag 112

520 LBP Pag 113

521 FT Pag 114

228 Transfer plate Pag 115/116

590

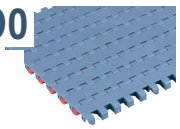

590 FT Pag 118

590 FT One track Belt Pag 119

590 FTT Pag 120

525

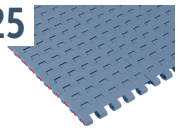

525 HD FT Pag 122

525 FTT Pag 123

525 HD FG Pag 124

525 HD GT Pag 125

525 HD GT Side indent Pag 126

530

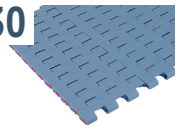

530 FT Pag 128

530 FTT Pag 129

530 GT Pag 130

530 GT Side indent Pag 131

530 LBP Pag 132

550

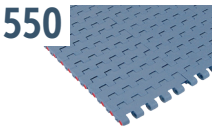

550 FT Pag 134

550 FT One track Belt Pag 135

550 FTT Pag 136

550 FG Pag 137

550 FG One track Belt Pag 138

550 GT Pag 139

550 GT Side indent Pag 140

551

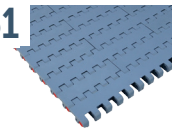

551 FT Pag 142

551 FTT Pag 143

551 GT Pag 144

551 GT Side indent Pag 145

551 LBP Pag 146

551 LBP PRO Pag 147/148

552

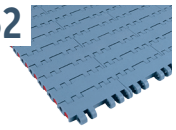

552 FT Pag 150

552 FT One track Belt Pag 151

552 FTT Pag 152

552 GT Pag 153

552 GT Side indent Pag 154

552 PT Pag 155

552 PT One track Belt Pag 156

556

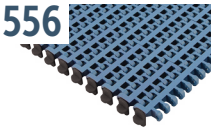

556 FT Pag 158

556 GT Pag 159

600

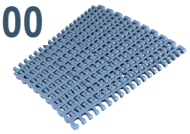

600 Standard Pag 161

600 Heavy duty Pag 162

600 Heavy duty With bearing Pag 163

600 Small radius Pag 164

600 Heavy duty/ Small radius Pag 165

600 Heavy duty/ Small radius With bearing Pag 166

600 with pusher Pag 167

1047 Heavy duty guide Pag 167

500

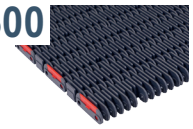

500 RR Pag 169

389 Combs Pag 170

260/261

260 M FT Pag 172

260 M FG Pag 173

260 TAB Pag 174

261 M FT Pag 175

261 M TAB Pag 176

510

Imperial Size

Pitch 8 mm
H= 6 mm

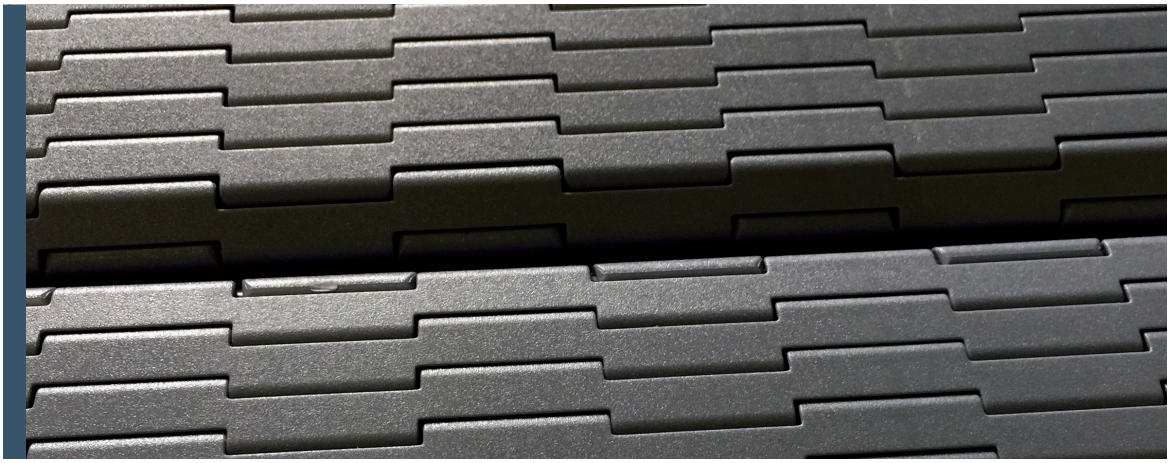

510 FT

510 FT

Modular Belt Series 510 FT, H=6 M=3”

CODE STRUCTURE GUIDE (Example)			
5331	01	0012	A
Series	*Material	Width	Version

pg. 178
pg. 380->386

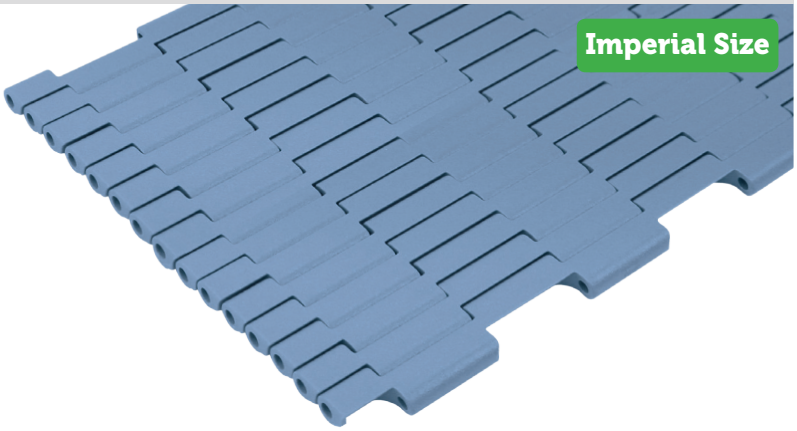

***Material**

LFA - Code 01
Low friction Acetal

Max w. load: 205 LBS/FT /3000 N/m
Weight: 1.19 LBS/FT²/5,8 kg/m²
Temp. range dry: -40÷176°F/-40÷80 °C
Temp. range wet: -40÷149°F/-40÷65 °C
Pin material: PBT white

MX - Code 03
Performance PBT

Max w. load: 185 LBS/FT /2700 N/m
Weight: 1.13 LBS/FT²/5,5 kg/m²
Temp. range dry: -40÷248°F/-40÷120 °C
Temp. range wet: -40÷140°F/-40÷60 °C
Pin material: POM grey

Version A - Standard

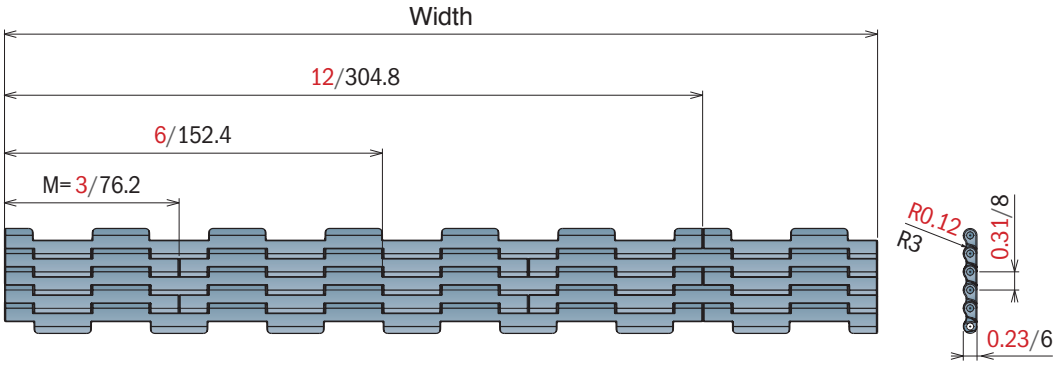

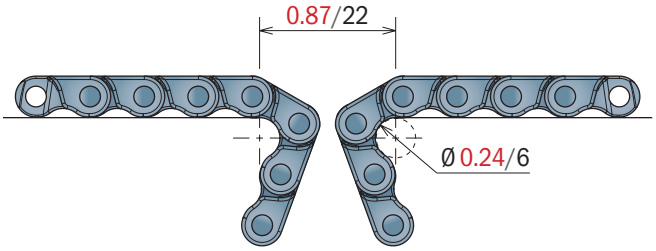

Version A - Standard

Series	Material	Width	Version
5331	*	0003	A
5331	*	0006	A
5331	*	0009	A
5331	*	0012	A
5331	*	0015	A
5331	*	0018	A
5331	*	0021	A
5331	*	0024	A

520/521

Metric Size

Imperial Size

Pitch 1/2"- 12,7 mm
H= 0.35"- 8,7 mm

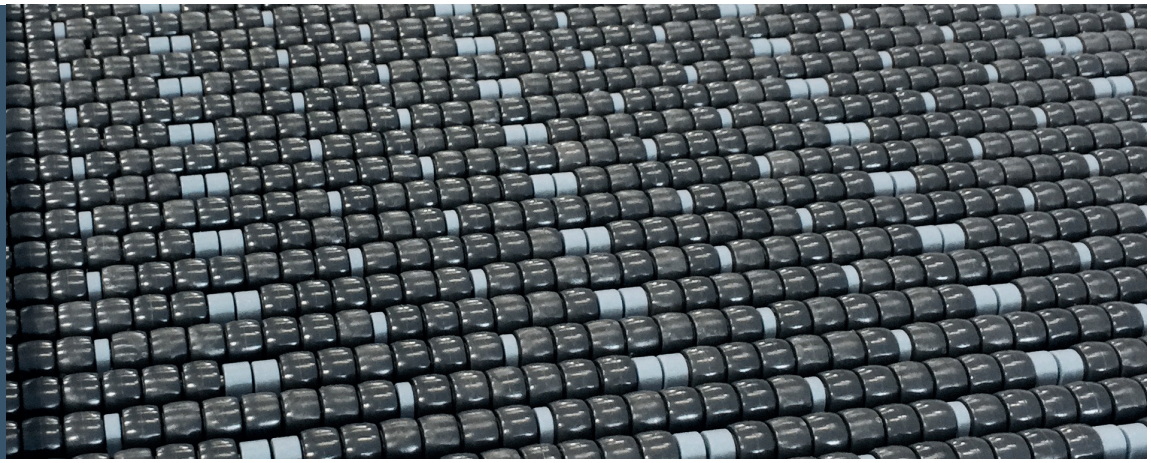

520 FT
520 FTT
520 FG
520 GT
520 LBP
521 FT
228

520 FT

Modular Belt Series 520 FT, H=8,7 M=85

Backflex radius min. (in-min): 0.39/10

CODE STRUCTURE GUIDE (Example)			
5201	03	0340	C
Series	*Material	Width	Version

pg. 180-181
pg. 380->386

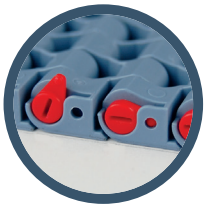

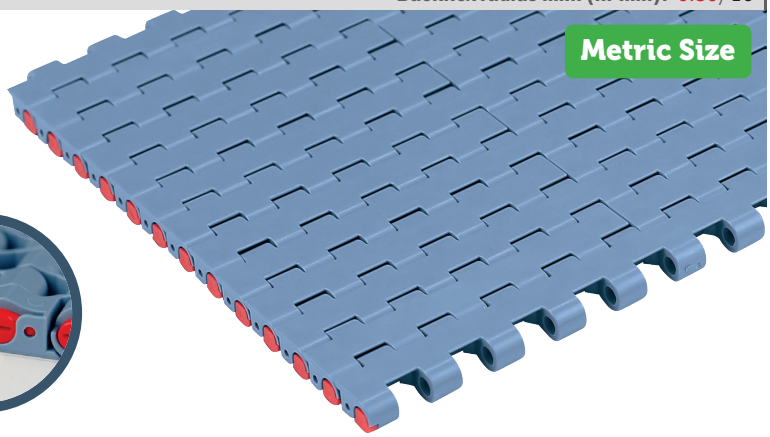

*Material

LFA - Code 01
Low friction Acetal

Max w. load: 1475 LBS/FT /21500 N/m
Weight: 1.60 LBS/FT²/7,8 kg/m²
Temp. range dry: -40÷176°F/-40÷80 °C
Temp. range wet: -40÷149°F/-40÷65 °C
Pin material: PBT white

MX - Code 03
Performance PBT

Max w. load: 1200 LBS/FT /17500 N/m
Weight: 1.54 LBS/FT²/7,5 kg/m²
Temp. range dry: -40÷248°F/-40÷120 °C
Temp. range wet: -40÷140°F/-40÷60 °C
Pin material: POM grey

DKM - Code 16
Aramide Reinforced Acetal

Max w. load: 1475 LBS/FT /21500 N/m
Weight: 1.60 LBS/FT²/7,8 kg/m²
Temp. range dry: -40÷176°F/-40÷80 °C
Temp. range wet: -40÷149°F/-40÷65 °C
Pin material: PBT white

MWX - Code 17
Polyamide Composite

Max w. load: 1475 LBS/FT /21500 N/m
Weight: 1.66 LBS/FT²/8,1 kg/m²
Temp. range dry: -40÷219°F/-40÷104 °C
Temp. range wet: NR
Pin material: PBT white

MP - Code 13
Lubricated Acetal

Max w. load: 1475 LBS/FT /21500 N/m
Weight: 1.60 LBS/FT²/7,8 kg/m²
Temp. range dry: -40÷176°F/-40÷80 °C
Temp. range wet: -40÷149°F/-40÷65 °C
Pin material: PBT white

Version A - Standard

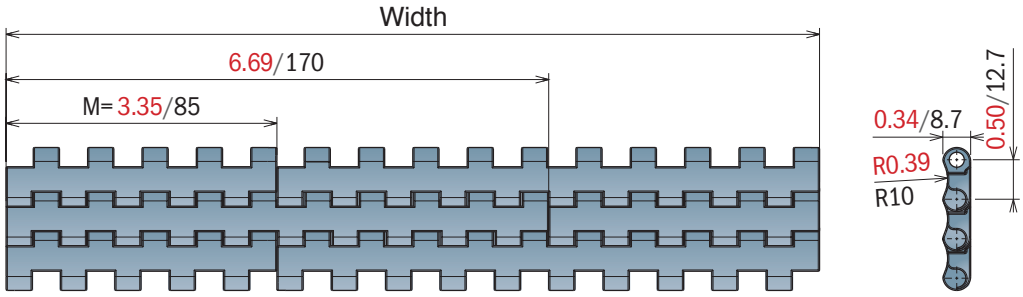

Version B - With 1 Positioner

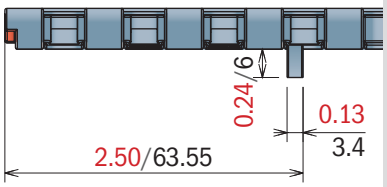

Version C - With 2 Positioner

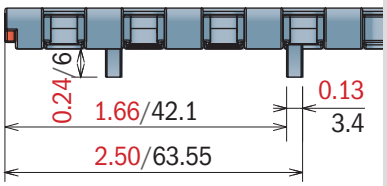

Version A - Standard

Series	Material	Width	Version
5201	*	0085	A
5201	*	0170	A
5201	*	0255	A
5201	*	0340	A
5201	*	0425	A
5201	*	0510	A
5201	*	0595	A
5201	*	0680	A
5201	*	0765	A
5201	*	0850	A
5201	*	0935	A
5201	*	1020	A
5201	*	1105	A
5201	*	1190	A
5201	*	1275	A
5201	*	1360	A
5201	*	1445	A
5201	*	1530	A

Version B - With 1 Positioner

Series	Material	Width	Version
5201	*	0085	B
5201	*	0170	B
5201	*	0255	B
5201	*	0340	B
5201	*	0425	B
5201	*	0510	B
5201	*	0595	B
5201	*	0680	B
5201	*	0765	B
5201	*	0850	B
5201	*	0935	B
5201	*	1020	B
5201	*	1105	B
5201	*	1190	B
5201	*	1275	B
5201	*	1360	B
5201	*	1445	B
5201	*	1530	B

Version C - With 2 Positioners

Series	Material	Width	Version
5201	*	0085	C
5201	*	0170	C
5201	*	0255	C
5201	*	0340	C
5201	*	0425	C
5201	*	0510	C
5201	*	0595	C
5201	*	0680	C
5201	*	0765	C
5201	*	0850	C
5201	*	0935	C
5201	*	1020	C
5201	*	1105	C
5201	*	1190	C
5201	*	1275	C
5201	*	1360	C
5201	*	1445	C
5201	*	1530	C

520 FTT

Modular Belt Series 520 FTT, H=8,7 M=85

Backflex radius min. (in-min): 0.39/10

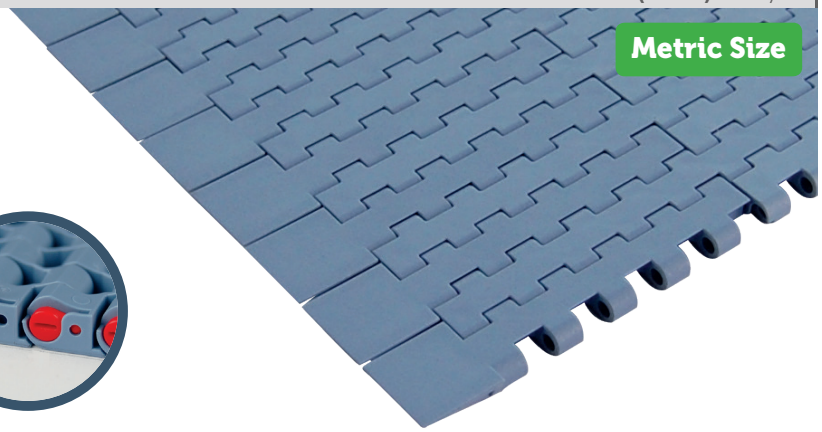

CODE STRUCTURE GUIDE (Example)			
5206	01	0170	CN
Series	*Material	Width	Version

pg. 180-181
pg. 380->386

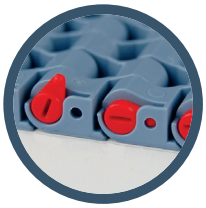

*Material

LFA - Code 01
Low friction Acetal

Max w. load: 1475 LBS/FT /21500 N/m
Weight: 1.60 LBS/FT²/7,8 kg/m²
Temp. range dry: -40÷176°F/-40÷80 °C
Temp. range wet: -40÷149°F/-40÷65 °C
Pin material: PBT white

MX - Code 03
Performance PBT

Max w. load: 1200 LBS/FT /17500 N/m
Weight: 1.54 LBS/FT²/7,5 kg/m²
Temp. range dry: -40÷248°F/-40÷120 °C
Temp. range wet: -40÷140°F/-40÷60 °C
Pin material: POM grey

DKM - Code 16
Aramide Reinforced Acetal

Max w. load: 1475 LBS/FT /21500 N/m
Weight: 1.60 LBS/FT²/7,5 kg/m²
Temp. range dry: -40÷176°F/-40÷80 °C
Temp. range wet: -40÷149°F/-40÷65 °C
Pin material: PBT white

MWX - Code 17
Polyamide Composite

Max w. load: 1475 LBS/FT /21500 N/m
Weight: 1.66 LBS/FT²/7,8 kg/m²
Temp. range dry: -40÷219°F/-40÷104 °C
Temp. range wet: NR
Pin material: PBT white

MP - Code 13
Lubricated Acetal

Max w. load: 1475 LBS/FT /21500 N/m
Weight: 1.60 LBS/FT²/7,8 kg/m²
Temp. range dry: -40÷176°F/-40÷80 °C
Temp. range wet: -40÷149°F/-40÷65 °C
Pin material: PBT white

Version C

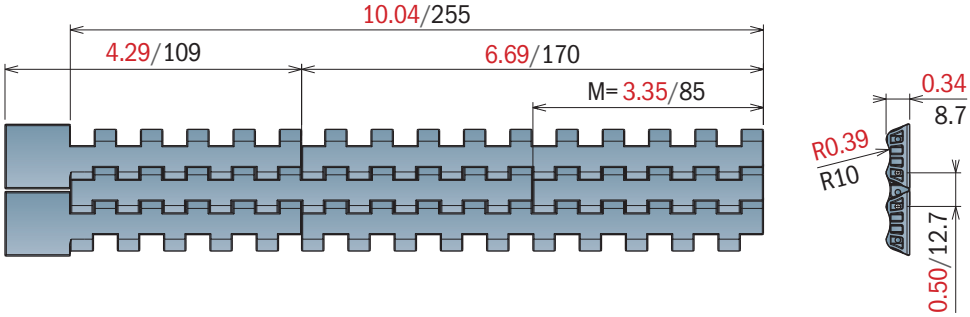

Version CN - Near

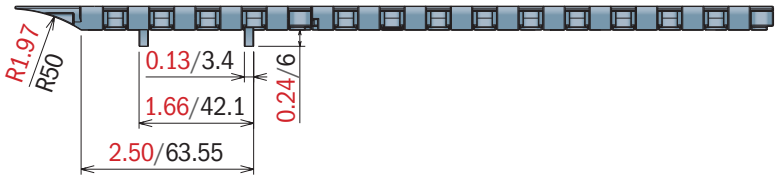

Version CO - Opposite

Version C

Series	Material	Width	Version
5206	*	0085	C

Version CN - Near

Series	Material	Width	Version
5206	*	0170	CN
5206	*	0255	CN

Version CO - Opposite

Series	Material	Width	Version
5206	*	0170	CO
5206	*	0255	CO

520 FG Open Surface 25%

Modular Belt Series 520 FG, H=8,7 M=85

Backflex radius min. (in-min): 0.39/10

CODE STRUCTURE GUIDE (Example)			
5202	01	0765	A
Series	*Material	Width	Version

pg. 180-181
pg. 380->386

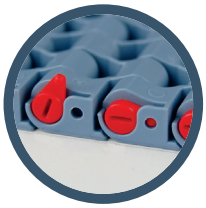

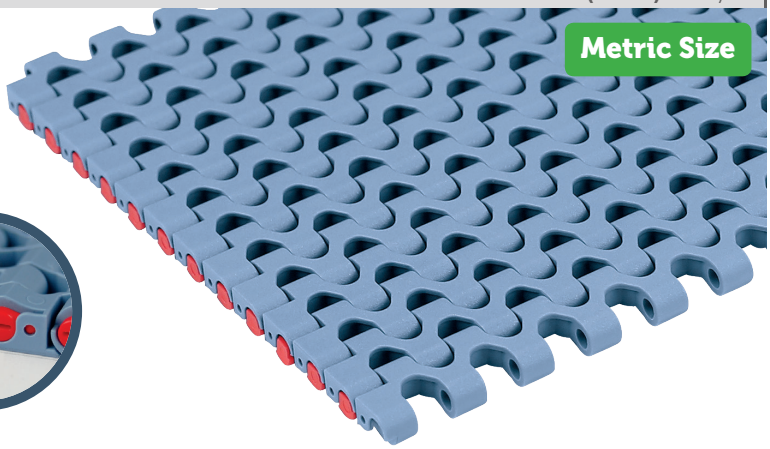

*Material

LFA - Code 01
Low friction Acetal

Max w. load: 1475 LBS/FT /21500 N/m
Weight: 1.54 LBS/FT²/7,5 kg/m²
Temp. range dry: -40÷176°F/-40÷80 °C
Temp. range wet: -40÷149°F/-40÷65 °C
Pin material: PBT white

MX - Code 03
Performance PBT

Max w. load: 1200 LBS/FT /17500 N/m
Weight: 1.47 LBS/FT²/7,2 kg/m²
Temp. range dry: -40÷248°F/-40÷120 °C
Temp. range wet: -40÷140°F/-40÷60 °C
Pin material: POM grey

DKM - Code 16
Aramide Reinforced Acetal

Max w. load: 1475 LBS/FT /21500 N/m
Weight: 1.54 LBS/FT²/7,5 kg/m²
Temp. range dry: -40÷176°F/-40÷80 °C
Temp. range wet: -40÷149°F/-40÷65 °C
Pin material: PBT white

MWX - Code 17
Polyamide Composite

Max w. load: 1475 LBS/FT /21500 N/m
Weight: 1.60 LBS/FT²/7,8 kg/m²
Temp. range dry: -40÷219°F/-40÷104 °C
Temp. range wet: NR
Pin material: PBT white

MP - Code 13
Lubricated Acetal

Max w. load: 1475 LBS/FT /21500 N/m
Weight: 1.54 LBS/FT²/7,5 kg/m²
Temp. range dry: -40÷176°F/-40÷80 °C
Temp. range wet: -40÷149°F/-40÷65 °C
Pin material: PBT white

Version A - Standard

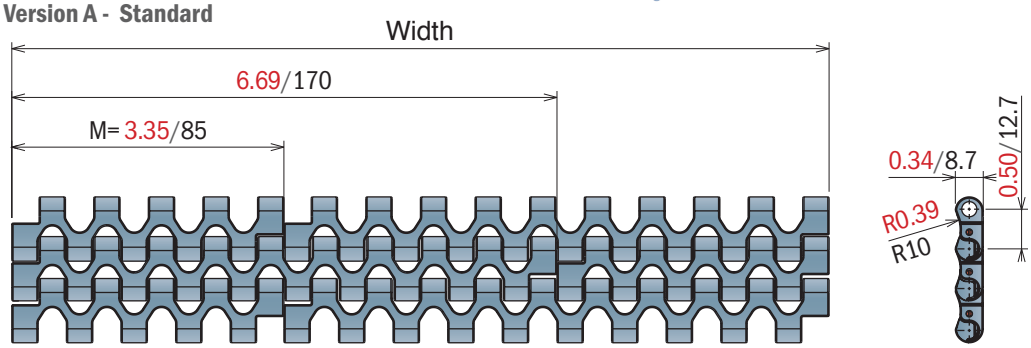

Version B - With 1 Positioner

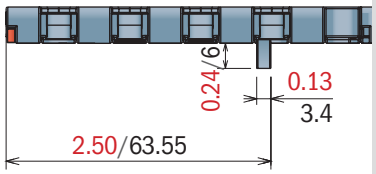

Version C - With 2 Positioner

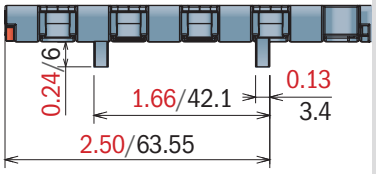

Version A - Standard

Series	Material	Width	Version
5202	*	0085	A
5202	*	0170	A
5202	*	0255	A
5202	*	0340	A
5202	*	0425	A
5202	*	0510	A
5202	*	0595	A
5202	*	0680	A
5202	*	0765	A
5202	*	0850	A
5202	*	0935	A
5202	*	1020	A
5202	*	1105	A
5202	*	1190	A
5202	*	1275	A
5202	*	1360	A
5202	*	1445	A
5202	*	1530	A

Version B - With 1 Positioner

Series	Material	Width	Version
5202	*	0085	B
5202	*	0170	B
5202	*	0255	B
5202	*	0340	B
5202	*	0425	B
5202	*	0510	B
5202	*	0595	B
5202	*	0680	B
5202	*	0765	B
5202	*	0850	B
5202	*	0935	B
5202	*	1020	B
5202	*	1105	B
5202	*	1190	B
5202	*	1275	B
5202	*	1360	B
5202	*	1445	B
5202	*	1530	B

Version C - With 2 Positioners

Series	Material	Width	Version
5202	*	0085	C
5202	*	0170	C
5202	*	0255	C
5202	*	0340	C
5202	*	0425	C
5202	*	0510	C
5202	*	0595	C
5202	*	0680	C
5202	*	0765	C
5202	*	0850	C
5202	*	0935	C
5202	*	1020	C
5202	*	1105	C
5202	*	1190	C
5202	*	1275	C
5202	*	1360	C
5202	*	1445	C
5202	*	1530	C

520 GT

Modular Belt Series 520 GT, H=8,7 M=85

Backflex radius min. (in-min): 0.78/20

CODE STRUCTURE GUIDE (Example)			
5203	02	0510	B
Series	*Material	Width	Version

pg. 180-181
pg. 380->386

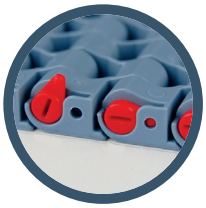

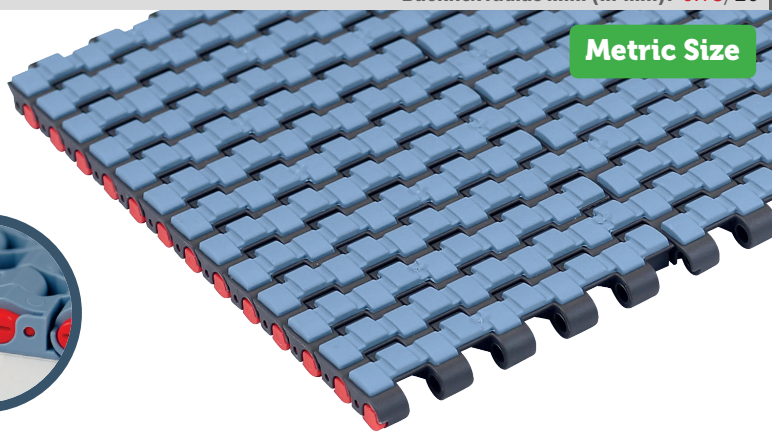

*Material

LFA - Code 01
Low friction Acetal

Max w. load: 1475 LBS/FT / 21500 N/m
Weight: 1.84 LBS/FT² / 9,0 kg/m²
Temp. range dry: -40÷176°F / -40÷80 °C
Temp. range wet: -40÷149°F / -40÷65 °C
Pin material: PBT white
Hardness: 75 ShA

PP - Code 02
Polypropylene

Max w. load: 890 LBS/FT / 13000 N/m
Weight: 1.54 LBS/FT² / 7,5 kg/m²
Temp. range dry: 39.2÷176°F / 4÷80 °C
Temp. range wet: 39.2÷149°F / 4÷65 °C
Pin material: PP blu
Hardness: 75 ShA

MX - Code 03
Performance PBT

Max w. load: 1200 LBS/FT / 17500 N/m
Weight: 1.90 LBS/FT² / 9,3 kg/m²
Temp. range dry: -40÷248°F / -40÷120 °C
Temp. range wet: -40÷140°F / -40÷60 °C
Pin material: POM grey
Hardness: 75 ShA

Version A - Standard

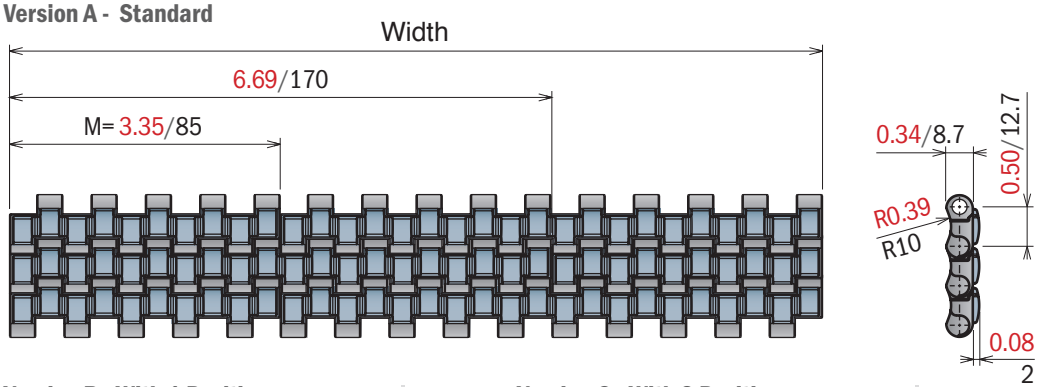

Version B - With 1 Positioner

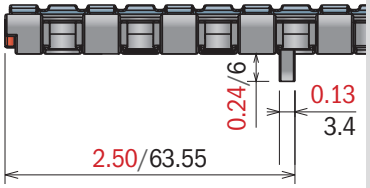

Version C - With 2 Positioner

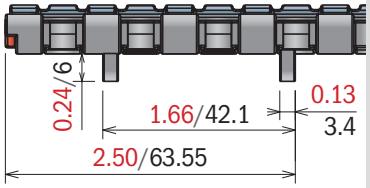

Version A - Standard

Series	Material	Width	Version
5203	*	0085	A
5203	*	0170	A
5203	*	0255	A
5203	*	0340	A
5203	*	0425	A
5203	*	0510	A
5203	*	0595	A
5203	*	0680	A
5203	*	0765	A
5203	*	0850	A
5203	*	0935	A
5203	*	1020	A
5203	*	1105	A
5203	*	1190	A
5203	*	1275	A
5203	*	1360	A
5203	*	1445	A
5203	*	1530	A

Version B - With 1 Positioner

Series	Material	Width	Version
5203	*	0085	B
5203	*	0170	B
5203	*	0255	B
5203	*	0340	B
5203	*	0425	B
5203	*	0510	B
5203	*	0595	B
5203	*	0680	B
5203	*	0765	B
5203	*	0850	B
5203	*	0935	B
5203	*	1020	B
5203	*	1105	B
5203	*	1190	B
5203	*	1275	B
5203	*	1360	B
5203	*	1445	B
5203	*	1530	B

Version C - With 2 Positioners

Series	Material	Width	Version
5203	*	0085	C
5203	*	0170	C
5203	*	0255	C
5203	*	0340	C
5203	*	0425	C
5203	*	0510	C
5203	*	0595	C
5203	*	0680	C
5203	*	0765	C
5203	*	0850	C
5203	*	0935	C
5203	*	1020	C
5203	*	1105	C
5203	*	1190	C
5203	*	1275	C
5203	*	1360	C
5203	*	1445	C
5203	*	1530	C

520 LBP

Modular Belt Series 520 LBP, H=8,7 M=85

Backflex radius min. (in-min): 2.56/65

CODE STRUCTURE GUIDE (Example)			
5204	01	1530	C
Series	*Material	Width	Version

pg. 180-181
pg. 380->386

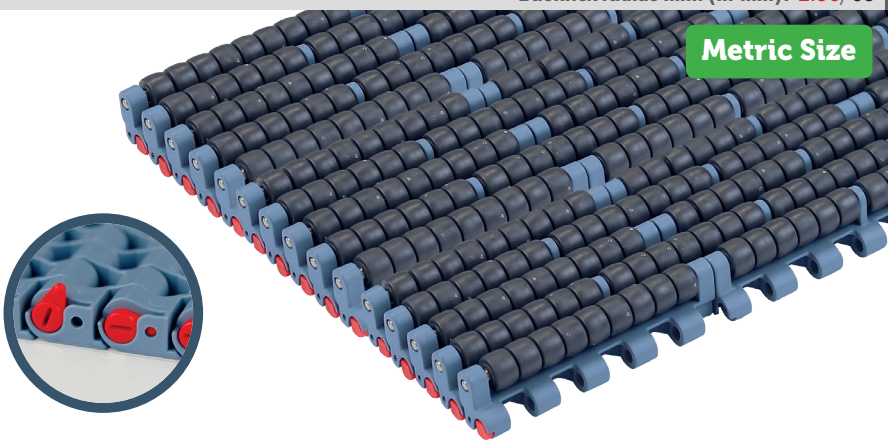

Version A - Standard

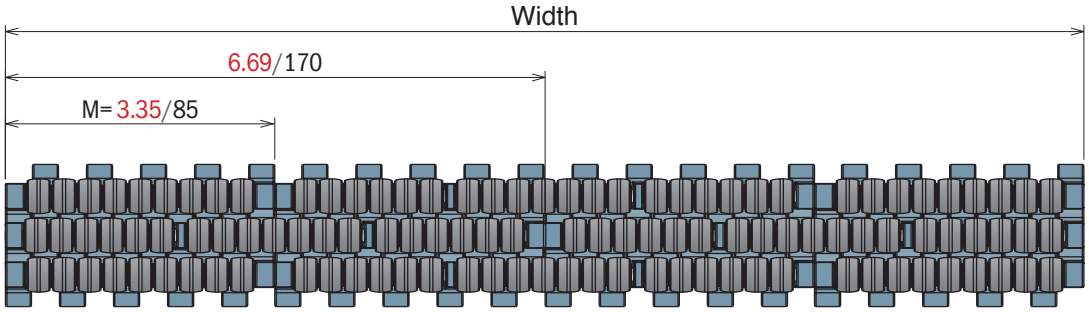

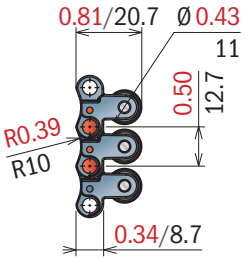

***Material**

LFA - Code 01
Low friction Acetal

Max w. load:	1475 LBS/FT /21500 N/m
Weight:	4.91 LBS/FT²/24,0 kg/m²
Temp. range dry:	-40÷176°F/-40÷80 °C
Temp. range wet:	33.8÷149°F/1÷65 °C
Pin material:	PBT white

Version B - With 1 Positioner

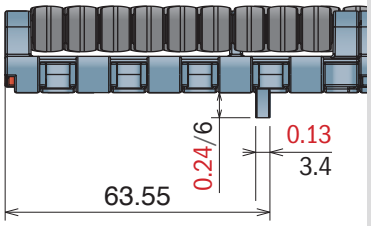

Version C - With 2 Positioner

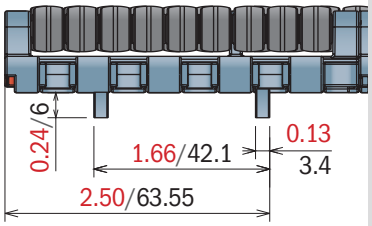

Version A - Standard

Series	Material	Width	Version
5204	*	0085	A
5204	*	0170	A
5204	*	0255	A
5204	*	0340	A
5204	*	0425	A
5204	*	0510	A
5204	*	0595	A
5204	*	0680	A
5204	*	0765	A
5204	*	0850	A
5204	*	0935	A
5204	*	1020	A
5204	*	1105	A
5204	*	1190	A
5204	*	1275	A
5204	*	1360	A
5204	*	1445	A
5204	*	1530	A

Version B - With 1 Positioner

Series	Material	Width	Version
5204	*	0085	B
5204	*	0170	B
5204	*	0255	B
5204	*	0340	B
5204	*	0425	B
5204	*	0510	B
5204	*	0595	B
5204	*	0680	B
5204	*	0765	B
5204	*	0850	B
5204	*	0935	B
5204	*	1020	B
5204	*	1105	B
5204	*	1190	B
5204	*	1275	B
5204	*	1360	B
5204	*	1445	B
5204	*	1530	B

Version C - With 2 Positioners

Series	Material	Width	Version
5204	*	0085	C
5204	*	0170	C
5204	*	0255	C
5204	*	0340	C
5204	*	0425	C
5204	*	0510	C
5204	*	0595	C
5204	*	0680	C
5204	*	0765	C
5204	*	0850	C
5204	*	0935	C
5204	*	1020	C
5204	*	1105	C
5204	*	1190	C
5204	*	1275	C
5204	*	1360	C
5204	*	1445	C
5204	*	1530	C

521 FT

Modular Belt Series 520 GT, H=8,7 M=85

Backflex radius min. (in-min): 0.39/10

Imperial Size

CODE STRUCTURE GUIDE (Example)			
5311	01	9750	C
Series	*Material	Width	Version

pg. 179
pg. 380->386

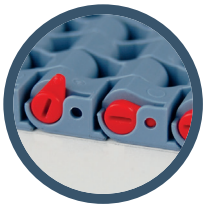

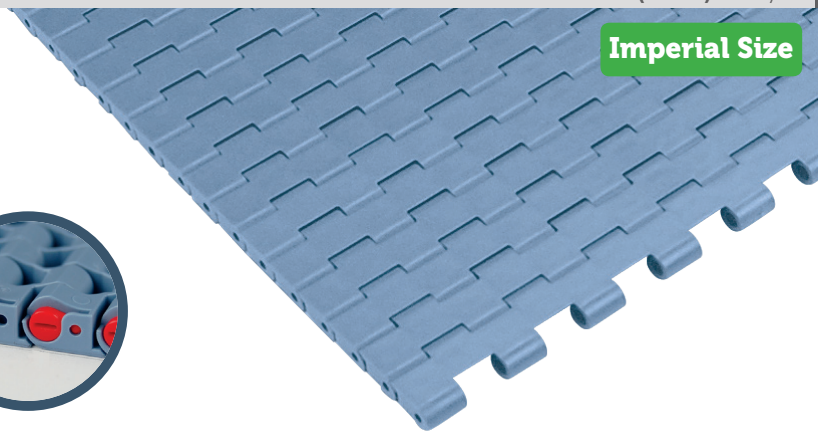

*Material

LFA - Code 01
Low friction Acetal

Max w. load: 1475 LBS/FT /21500 N/m
Weight: 1.64 LBS/FT²/8,0 kg/m²
Temp. range dry: -40÷176°F/-40÷80 °C
Temp. range wet: -40÷149°F/-40÷65 °C
Pin material: PBT white

MX - Code 03
Performance PBT

Max w. load: 1200 LBS/FT /17500 N/m
Weight: 1.60 LBS/FT²/7,8 kg/m²
Temp. range dry: -40÷248°F/-40÷120 °C
Temp. range wet: -40÷140°F/-40÷60 °C
Pin material: POM grey

DKM - Code 16
Aramide Reinforced Acetal

Max w. load: 1475 LBS/FT /21500 N/m
Weight: 1.64 LBS/FT²/8,0 kg/m²
Temp. range dry: -40÷176°F/-40÷80 °C
Temp. range wet: -40÷149°F/-40÷65 °C
Pin material: PBT white

MWX - Code 17
Polyamide Composite

Max w. load: 1475 LBS/FT /21500 N/m
Weight: 1.70 LBS/FT²/8,3 kg/m²
Temp. range dry: -40÷219°F/-40÷104 °C
Temp. range wet: NR
Pin material: PBT white

MP - Code 13
Lubricated Acetal

Max w. load: 1475 LBS/FT /21500 N/m
Weight: 1.64 LBS/FT²/8,0 kg/m²
Temp. range dry: -40÷176°F/-40÷80 °C
Temp. range wet: -40÷149°F/-40÷65 °C
Pin material: PBT white

Version A - Standard

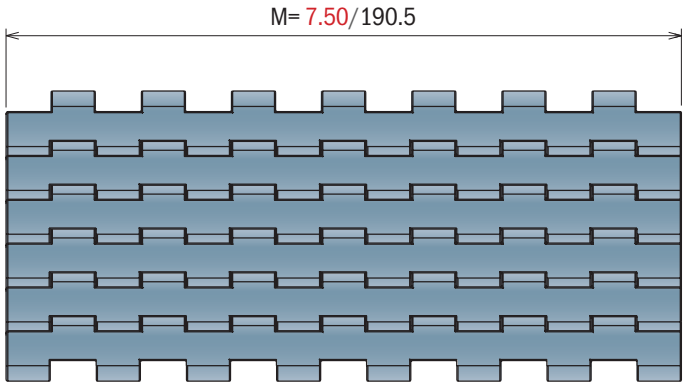

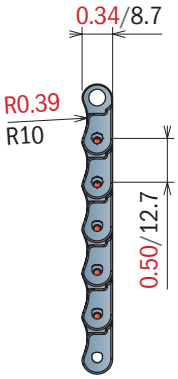

Version B - With 1 Positioner

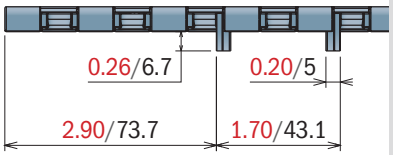

Version A - Standard

Series	Material	Width	Version
5311	*	9750	A

Version C - With 2 Positioners

Series	Material	Width	Version
5311	*	9750	C

228 Transfer Plate

Used with belt series 520 - 521 - 525 - 530

Transfer plate

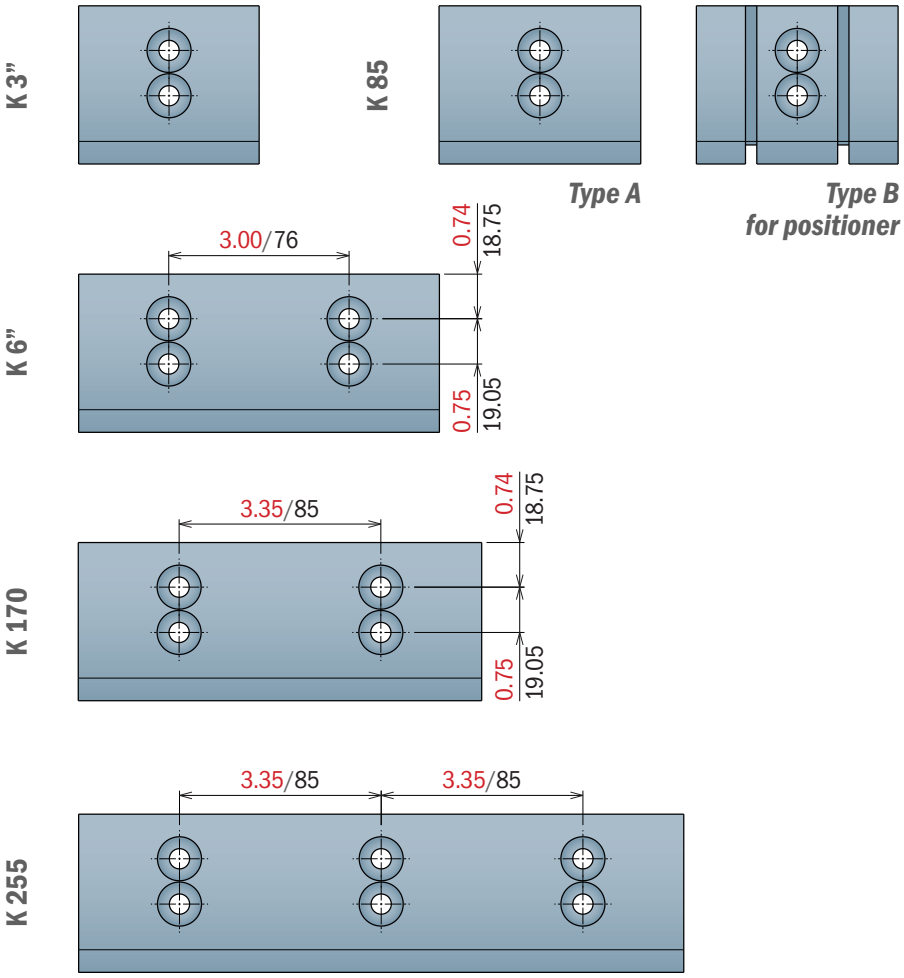

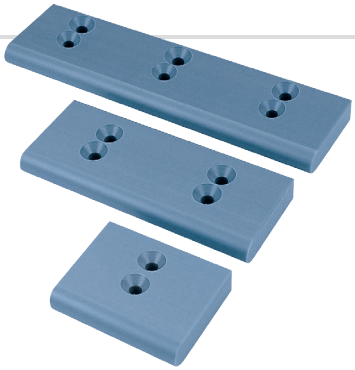

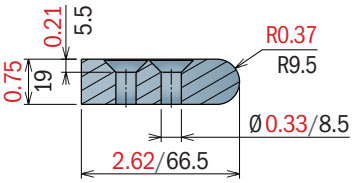

Part	Article-Nr.	K	Type
228	22801	3.35/85	A
228	22807	3.35/85	B
228	22802	6.70/170	A
228	22803	10.04/255	A
228	22808	3.00/76	A
228	22809	6.00/152,4	A

Available in different widths on request.

Transfer plate with rollers

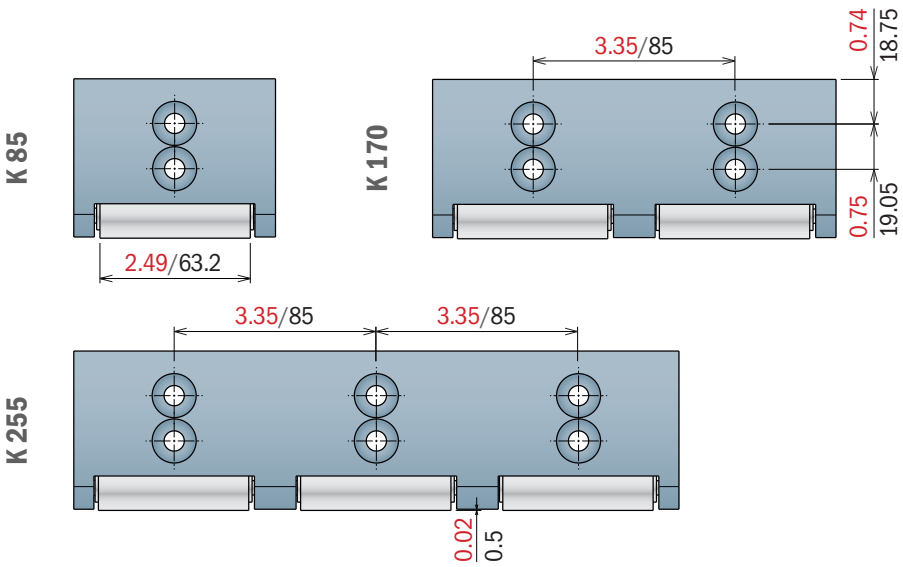

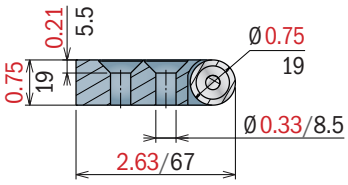

Part	Article-Nr.	K
228	22814	3.35/85
228	22815	6.70/170
228	22816	10.04/255

Available in different widths on request.

Material:
UHMW-PE
Bearings: Stainless steel

228 Transfer Plate

Used with belt series 520 - 521 - 525 - 530

Transfer plate with bearings

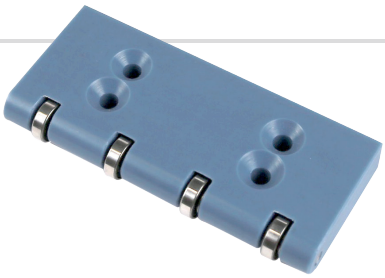

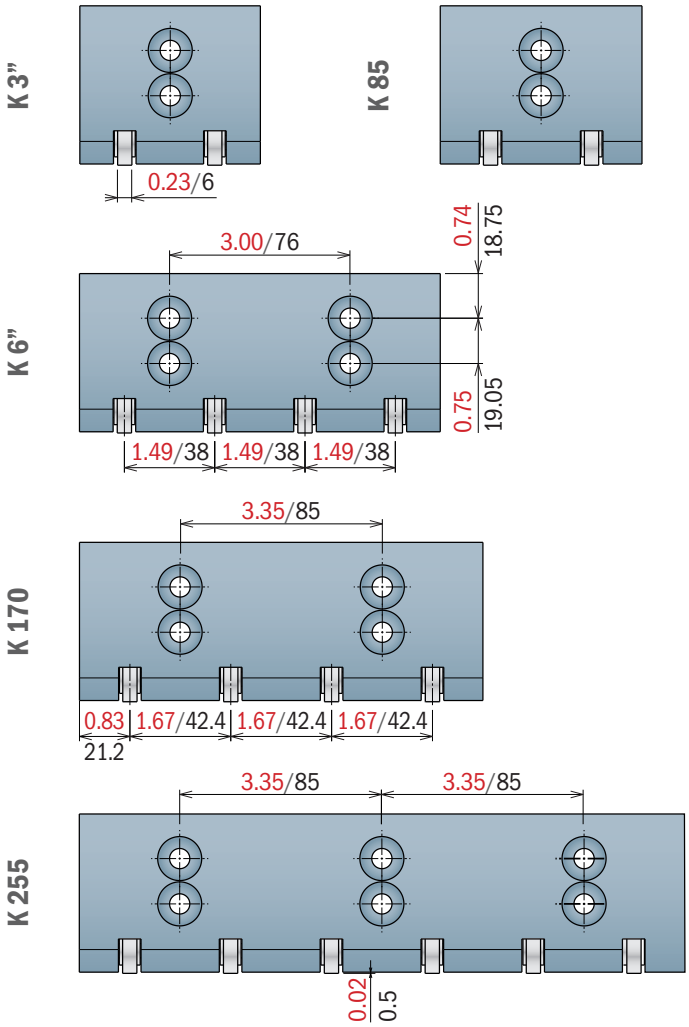

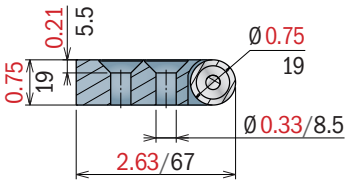

Part	Article-Nr.	K
228	22861	3.00/75.8
228	22811	3.35/85
228	22862	6.00/151.8
228	22812	6.70/170
228	22813	10.04/255

Available in different widths on request.

INSTALLATION TIPS

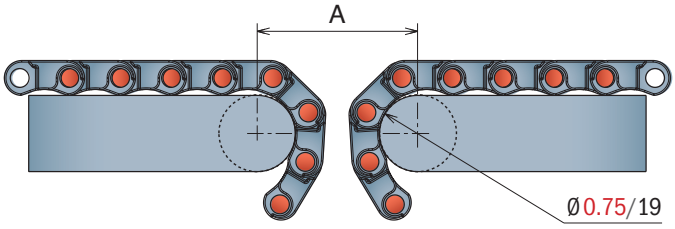

Belt type 1	Belt type 2	A
FT/ FG	FT/ FG	1.57/40
FT/ FG	GT	1.65/42
FT/ FG	LBP	2.09/53
GT	GT	1.73/44
GT	LBP	2.16/55
LBP	LBP	2.56/65

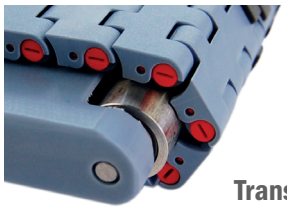

Transfer plate with roller

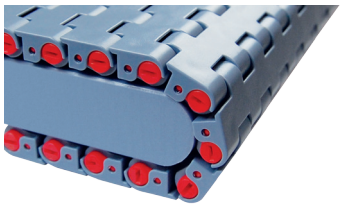

Transfer plate

590

Imperial Size

Pitch 19,05 mm
H= 8,7 mm

590 FT

590 FT *One track Belt*

590 FTT

590 FT

Modular Belt Series 590 FT, H=8,7 M=3"

Backflex radius min. (in-min): 0.98/25

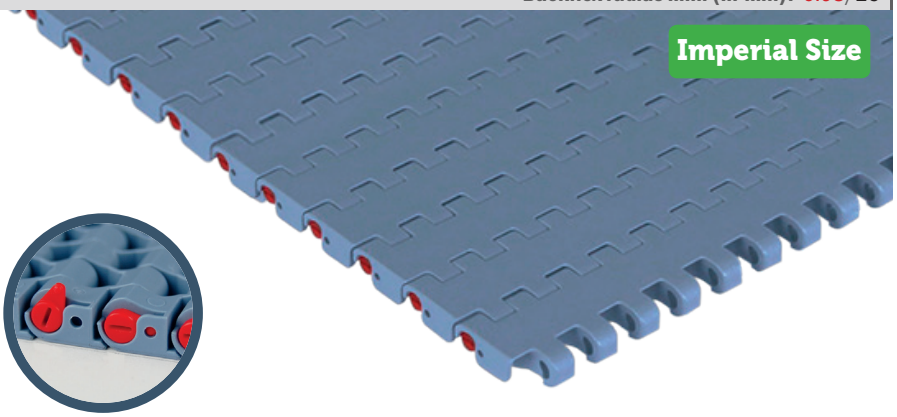

CODE STRUCTURE GUIDE (Example)			
5301	01	0009	C
Series	*Material	Width	Version

pg. 183

pg. 380->386

*Material

LFA - Code 01
Low friction Acetal

Max w. load: 2056 LBS/FT /30000 N/m
Weight: 1.47 LBS/FT²/7,2 kg/m²
Temp. range dry: -40÷176°F/-40÷80 °C
Temp. range wet: -40÷149°F/-40÷65 °C
Pin material: PBT white

MX - Code 03
Performance PBT

Max w. load: 1645 LBS/FT /24000 N/m
Weight: 1.43 LBS/FT²/7,0 kg/m²
Temp. range dry: -40÷248°F/-40÷120 °C
Temp. range wet: -40÷140°F/-40÷60 °C
Pin material: POM grey

DKM - Code 16
Aramide Reinforced Acetal

Max w. load: 2056 LBS/FT /30000 N/m
Weight: 1.47 LBS/FT²/7,2 kg/m²
Temp. range dry: -40÷176°F/-40÷80 °C
Temp. range wet: -40÷149°F/-40÷65 °C
Pin material: PBT white

MWX - Code 17
Polyamide Composite

Max w. load: 2056 LBS/FT /30000 N/m
Weight: 1.54 LBS/FT²/7,5 kg/m²
Temp. range dry: -40÷219°F/-40÷104 °C
Temp. range wet: NR
Pin material: PBT white

MP - Code 13
Lubricated Acetal

Max w. load: 2056 LBS/FT /30000 N/m
Weight: 1.47 LBS/FT²/7,2 kg/m²
Temp. range dry: -40÷176°F/-40÷80 °C
Temp. range wet: -40÷149°F/-40÷65 °C
Pin material: PBT white

Version A - Standard

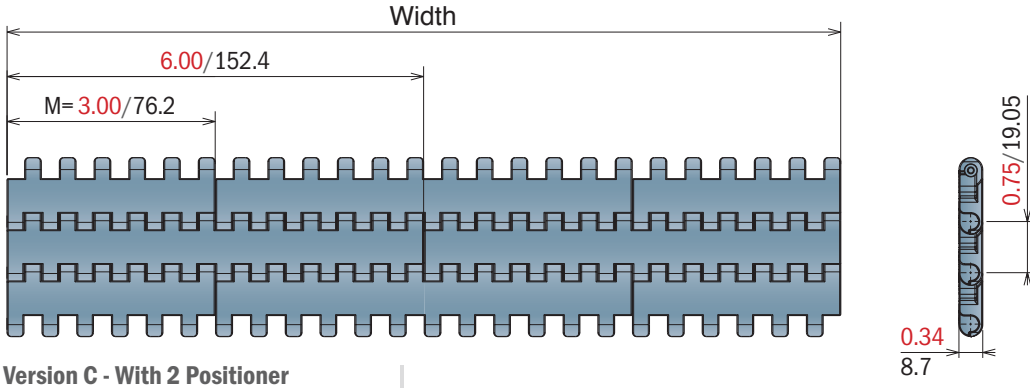

Version C - With 2 Positioner

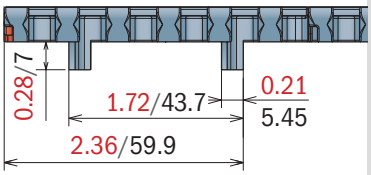

Version A - Standard

Series	Material	Width	Version
5301	*	0003	A
5301	*	0006	A
5301	*	0009	A
5301	*	0012	A
5301	*	0015	A
5301	*	0018	A
5301	*	0021	A
5301	*	0024	A
5301	*	0027	A
5301	*	0030	A
5301	*	0033	A
5301	*	0036	A
5301	*	0039	A
5301	*	0042	A
5301	*	0045	A
5301	*	0048	A
5301	*	0051	A
5301	*	0054	A

Version C - With 2 Positioners

Series	Material	Width	Version
5301	*	0003	C
5301	*	0006	C
5301	*	0009	C
5301	*	0012	C
5301	*	0015	C
5301	*	0018	C
5301	*	0021	C
5301	*	0024	C
5301	*	0027	C
5301	*	0030	C
5301	*	0033	C
5301	*	0036	C
5301	*	0039	C
5301	*	0042	C
5301	*	0045	C
5301	*	0048	C
5301	*	0051	C
5301	*	0054	C

590 FT *One track Belt*

Modular Belt Series 590 FT, H=8,7 M=3"

Backflex radius min. (in-min): 0.98/25

CODE STRUCTURE GUIDE (Example)			
5301	03	9325	C
Series	*Material	Width	Version

pg. 183

pg. 380->386

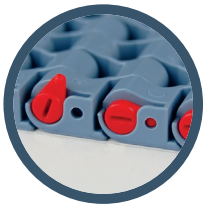

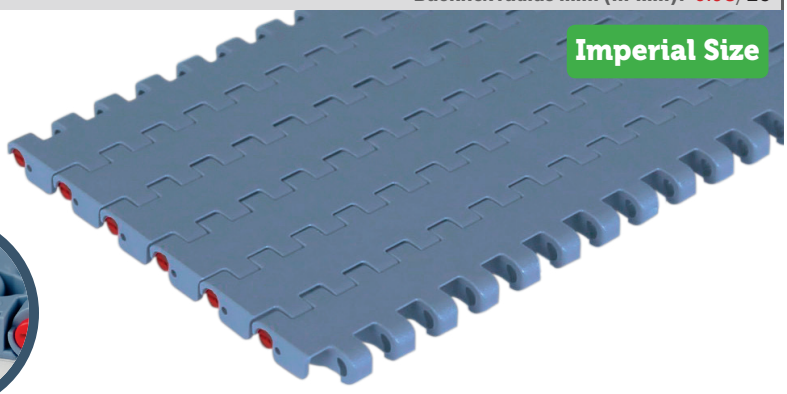

*Material

LFA - Code 01
Low friction Acetal

Max w. load: 2056 LBS/FT /30000 N/m
Weight: 1.47 LBS/FT²/7,2 kg/m²
Temp. range dry: -40÷176°F/-40÷80 °C
Temp. range wet: -40÷149°F/-40÷65 °C
Pin material: PBT white

MX - Code 03
Performance PBT

Max w. load: 1645 LBS/FT /24000 N/m
Weight: 1.43 LBS/FT²/7,0 kg/m²
Temp. range dry: -40÷248°F/-40÷120 °C
Temp. range wet: -40÷140°F/-40÷60 °C
Pin material: POM grey

DKM - Code 16
Aramide Reinforced Acetal

Max w. load: 2056 LBS/FT /30000 N/m
Weight: 1.47 LBS/FT²/7,2 kg/m²
Temp. range dry: -40÷176°F/-40÷80 °C
Temp. range wet: -40÷149°F/-40÷65 °C
Pin material: PBT white

MWX - Code 17
Polyamide Composite

Max w. load: 2056 LBS/FT /30000 N/m
Weight: 1.54 LBS/FT²/7,5 kg/m²
Temp. range dry: -40÷219°F/-40÷104 °C
Temp. range wet: NR
Pin material: PBT white

MP - Code 13
Lubricated Acetal

Max w. load: 2056 LBS/FT /30000 N/m
Weight: 1.47 LBS/FT²/7,2 kg/m²
Temp. range dry: -40÷176°F/-40÷80 °C
Temp. range wet: -40÷149°F/-40÷65 °C
Pin material: PBT white

Version A - Standard

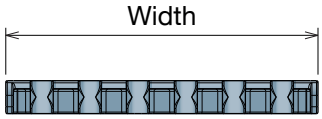

Version C - With 2 Positioner

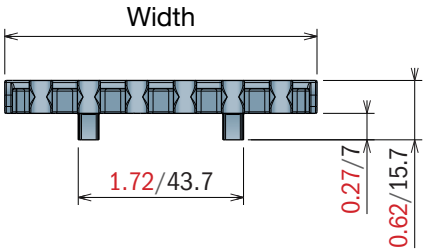

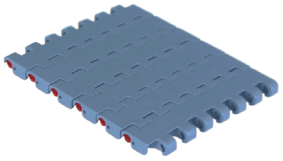

K325 - One track belt

Series	Material	Width	Version
5301	*	9325	A
5301	*	9325	C

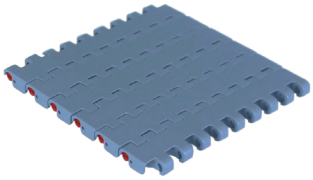

K450 - One track belt

Series	Material	Width	Version
5301	*	9450	A
5301	*	9450	C

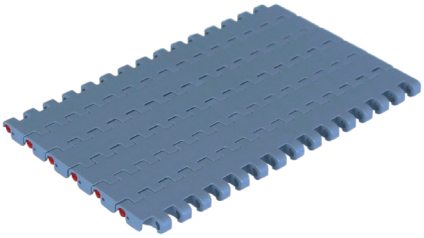

K750 - One track belt

Series	Material	Width	Version
5301	*	9750	A
5301	*	9750	C

590 FTT

Modular Belt Series 590 FTT, H=8,7

Backflex radius min. (in-min): 0.98/25

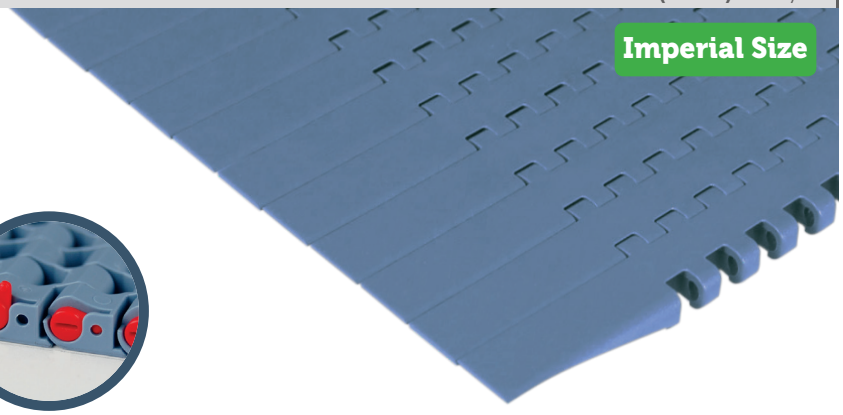

CODE STRUCTURE GUIDE (Example)			
5306	01	9450	C-R
Series	*Material	Width	Version

pg. 183
pg. 380->386

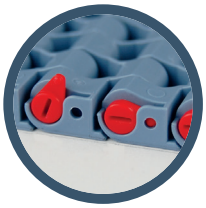

*Material

LFA - Code 01
Low friction Acetal

Max w. load: 2056 LBS/FT /30000 N/m
Weight: 1.47 LBS/FT²/7,2 kg/m²
Temp. range dry: -40÷176°F/-40÷80 °C
Temp. range wet: -40÷149°F/-40÷65 °C
Pin material: PBT white

MX - Code 03
Performance PBT

Max w. load: 1645 LBS/FT /24000 N/m
Weight: 1.43 LBS/FT²/7,0 kg/m²
Temp. range dry: -40÷248°F/-40÷120 °C
Temp. range wet: -40÷140°F/-40÷60 °C
Pin material: POM grey

DKM - Code 16
Aramide Reinforced Acetal

Max w. load: 2056 LBS/FT /30000 N/m
Weight: 1.47 LBS/FT²/7,2 kg/m²
Temp. range dry: -40÷176°F/-40÷80 °C
Temp. range wet: -40÷149°F/-40÷65 °C
Pin material: PBT white

MWX - Code 17
Polyamide Composite

Max w. load: 2056 LBS/FT /30000 N/m
Weight: 1.54 LBS/FT²/7,5 kg/m²
Temp. range dry: -40÷219°F/-40÷104 °C
Temp. range wet: NR
Pin material: PBT white

MP - Code 13
Lubricated Acetal

Max w. load: 2056 LBS/FT /30000 N/m
Weight: 1.47 LBS/FT²/7,2 kg/m²
Temp. range dry: -40÷176°F/-40÷80 °C
Temp. range wet: -40÷149°F/-40÷65 °C
Pin material: PBT white

Version 590 FTT DX

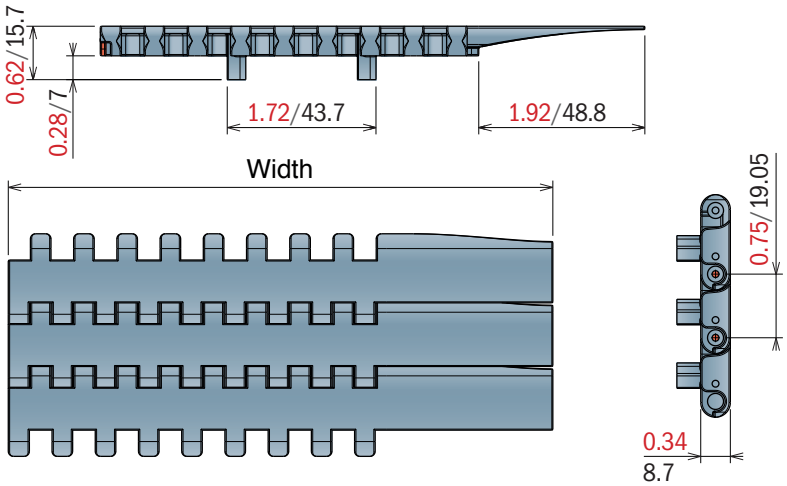

Version 590 FTT SX

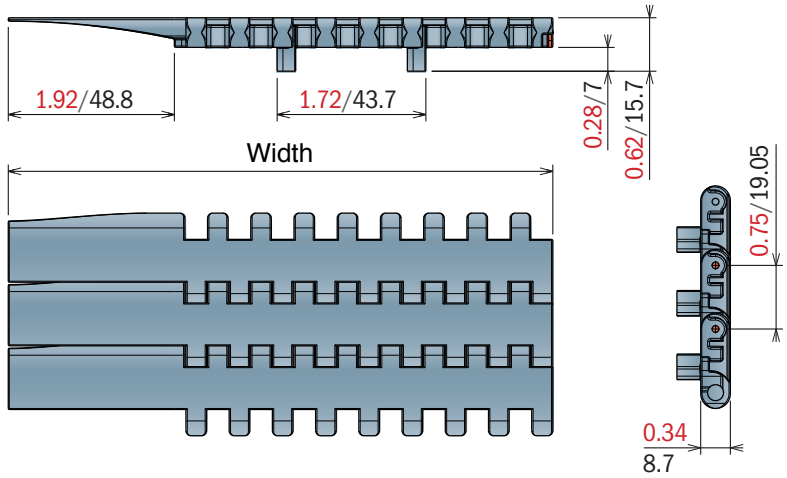

Version 590 FTT DX

Series	Material	Width	Version
5306	*	9450	C-R
5306	*	9750	C-R

Version 590 FTT SX

Series	Material	Width	Version
5306	*	9450	C-L
5306	*	9750	C-L

525

Metric Size

Pitch 15 mm
H= 8,7 mm

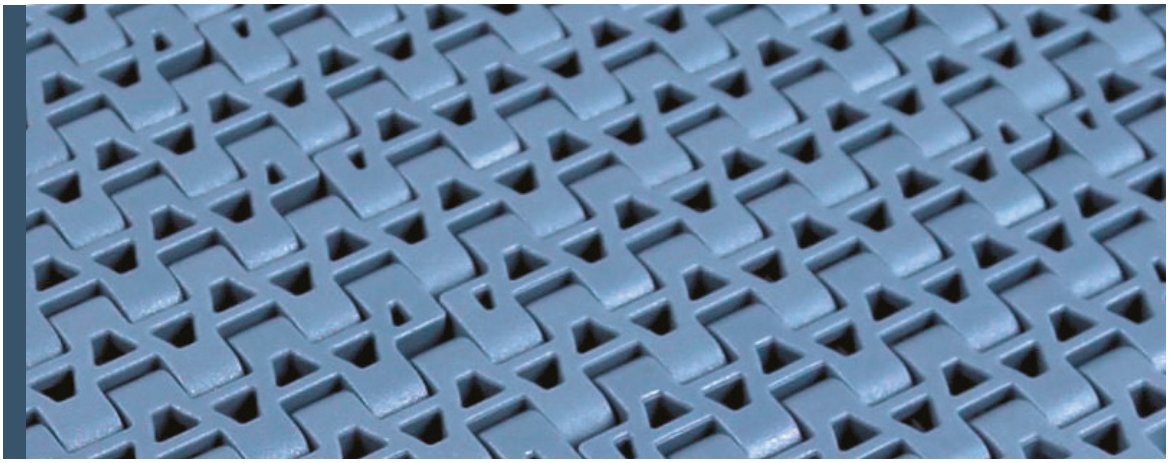

525 HD FT

525 FTT

525 HD FG

525 HD GT

525 HD GT *Side indent*

525 HD FT

Modular Belt Series 525 HD, H=8,7 M=85

Backflex radius min. (in-min): 0.98/25

CODE STRUCTURE GUIDE (Example)			
5261	03	0340	C
Series	*Material	Width	Version

pg. 182
pg. 380->386

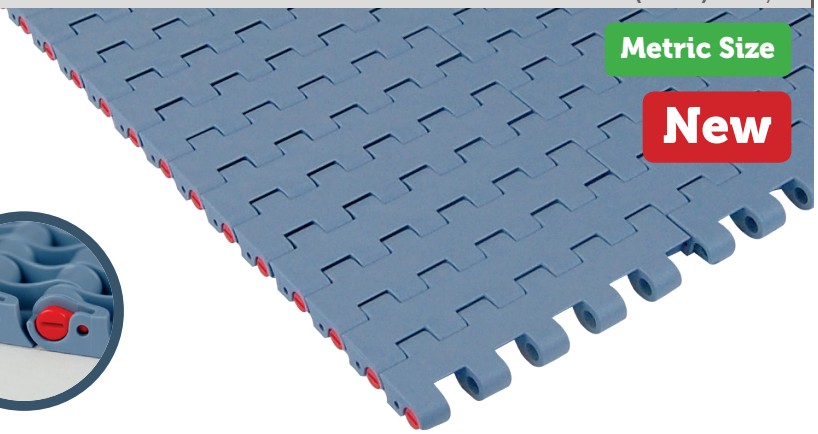

*Material

LFA - Code 01
Low friction Acetal

Max w. load: 1750 LBS/FT /25500 N/m
Weight: 1.84 LBS/FT²/9,0 kg/m²
Temp. range dry: -40÷176°F/-40÷80 °C
Temp. range wet: -40÷149°F/-40÷65 °C
Pin material: PBT white

MX - Code 03
Performance PBT

Max w. load: 1405 LBS/FT /20500 N/m
Weight: 1.78 LBS/FT²/8,7 kg/m²
Temp. range dry: -40÷248°F/-40÷120 °C
Temp. range wet: -40÷140°F/-40÷60 °C
Pin material: POM grey

DKM - Code 16
Aramide Reinforced Acetal

Max w. load: 1750 LBS/FT /25500 N/m
Weight: 1.84 LBS/FT²/9,0 kg/m²
Temp. range dry: -40÷176°F/-40÷80 °C
Temp. range wet: -40÷149°F/-40÷65 °C
Pin material: PBT white

MWX - Code 17
Polyamide Composite

Max w. load: 1750 LBS/FT /25500 N/m
Weight: 1.90 LBS/FT²/9,3 kg/m²
Temp. range dry: -40÷219°F/-40÷104 °C
Temp. range wet: NR
Pin material: PBT white

MP - Code 13
Lubricated Acetal

Max w. load: 1750 LBS/FT /25500 N/m
Weight: 1.84 LBS/FT²/9,0 kg/m²
Temp. range dry: -40÷176°F/-40÷80 °C
Temp. range wet: -40÷149°F/-40÷65 °C
Pin material: PBT white

Version A - Standard

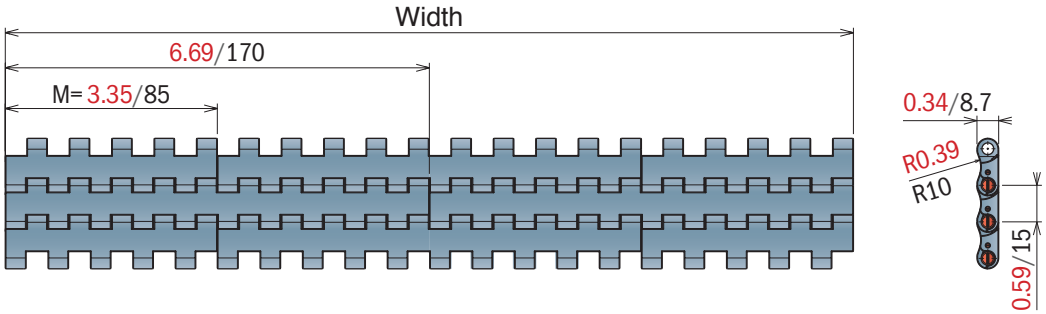

Version B - With 1 Positioner

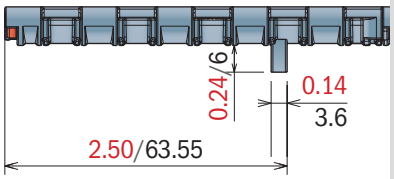

Version C - With 2 Positioner

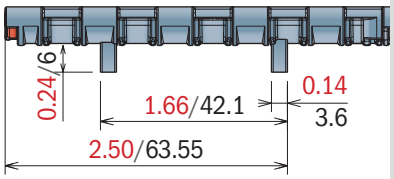

Version A - Standard

Series	Material	Width	Version
5261	*	0085	A
5261	*	0170	A
5261	*	0255	A
5261	*	0340	A
5261	*	0425	A
5261	*	0510	A
5261	*	0595	A
5261	*	0680	A
5261	*	0765	A
5261	*	0850	A
5261	*	0935	A
5261	*	1020	A
5261	*	1105	A
5261	*	1190	A
5261	*	1275	A
5261	*	1360	A
5261	*	1445	A
5261	*	1530	A

Version B - With 1 Positioner

Series	Material	Width	Version
5261	*	0085	B
5261	*	0170	B
5261	*	0255	B
5261	*	0340	B
5261	*	0425	B
5261	*	0510	B
5261	*	0595	B
5261	*	0680	B
5261	*	0765	B
5261	*	0850	B
5261	*	0935	B
5261	*	1020	B
5261	*	1105	B
5261	*	1190	B
5261	*	1275	B
5261	*	1360	B
5261	*	1445	B
5261	*	1530	B

Version C - With 2 Positioners

Series	Material	Width	Version
5261	*	0085	C
5261	*	0170	C
5261	*	0255	C
5261	*	0340	C
5261	*	0425	C
5261	*	0510	C
5261	*	0595	C
5261	*	0680	C
5261	*	0765	C
5261	*	0850	C
5261	*	0935	C
5261	*	1020	C
5261	*	1105	C
5261	*	1190	C
5261	*	1275	C
5261	*	1360	C
5261	*	1445	C
5261	*	1530	C

525 FTT

Modular Belt Series 525 HD, H=8,7 M=85

Backflex radius min. (in-min): 0.98/25

CODE STRUCTURE GUIDE (Example)			
5256	03	0085	CN
Series	*Material	Width	Version

pg. 182
pg. 380->386

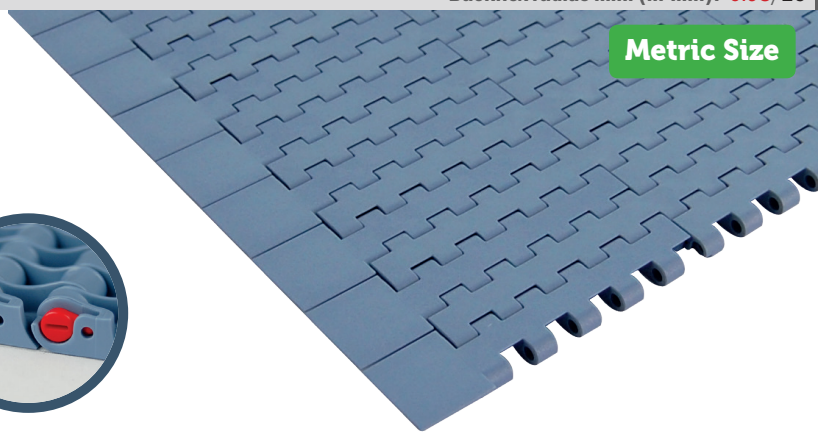

*Material

LFA - Code 01
Low friction Acetal

Max w. load: 1475 LBS/FT /21500 N/m
Weight: 1.60 LBS/FT²/7,8 kg/m²
Temp. range dry: -40÷176°F/-40÷80 °C
Temp. range wet: -40÷149°F/-40÷65 °C
Pin material: PBT white

MX - Code 03
Performance PBT

Max w. load: 1200 LBS/FT /17500 N/m
Weight: 1.54 LBS/FT²/7,5 kg/m²
Temp. range dry: -40÷248°F/-40÷120 °C
Temp. range wet: -40÷140°F/-40÷60 °C
Pin material: POM grey

DKM - Code 16
Aramide Reinforced Acetal

Max w. load: 1475 LBS/FT /21500 N/m
Weight: 1.60 LBS/FT²/7,8 kg/m²
Temp. range dry: -40÷176°F/-40÷80 °C
Temp. range wet: -40÷149°F/-40÷65 °C
Pin material: PBT white

MWX - Code 17
Polyamide Composite

Max w. load: 1475 LBS/FT /21500 N/m
Weight: 1.66 LBS/FT²/8,1 kg/m²
Temp. range dry: -40÷219°F/-40÷104 °C
Temp. range wet: NR
Pin material: PBT white

MP - Code 13
Lubricated Acetal

Max w. load: 1475 LBS/FT /21500 N/m
Weight: 1.60 LBS/FT²/7,8 kg/m²
Temp. range dry: -40÷176°F/-40÷80 °C
Temp. range wet: -40÷149°F/-40÷65 °C
Pin material: PBT white

Version C

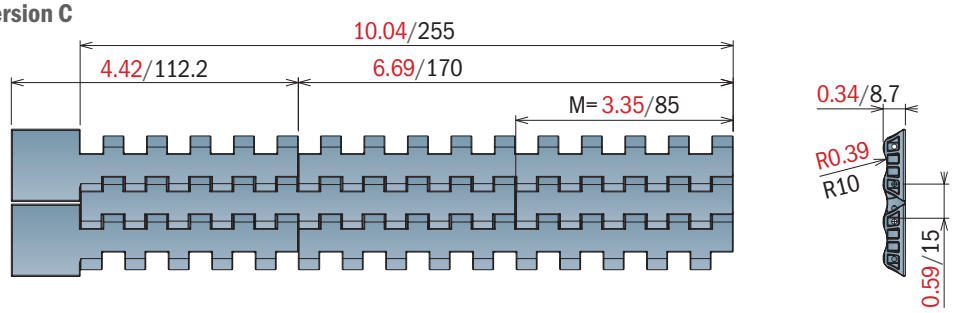

Version CN - Near

Version CO - Opposite

Version C

Series	Material	Width	Version
5256	*	0085	C

Version CN - Near

Series	Material	Width	Version
5256	*	0170	CN
5256	*	0255	CN

Version CO - Opposite

Series	Material	Width	Version
5256	*	0170	CO
5256	*	0255	CO

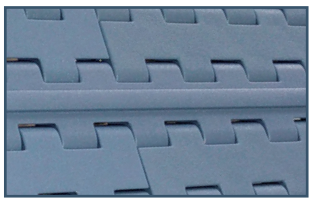

FT + Rib

SPECIAL APPLICATION IN PALLETIZER

ADD ON CODE:

- XR3 (RIB every 3 links) - XR5 (RIB every 5 links)

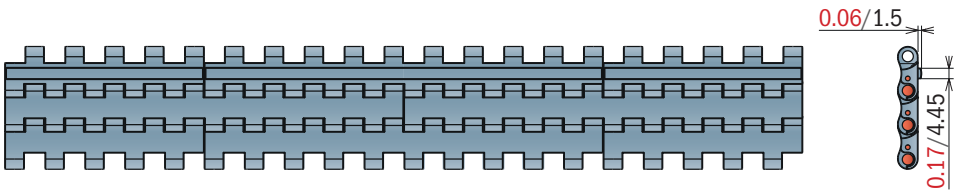

525 HD FG

Modular Belt Series 525 HD Flush grid, H=8,7 M=85

Backflex radius min. (in-min): 0.98/25

CODE STRUCTURE GUIDE (Example)			
5262	03	0340	C
Series	*Material	Width	Version

pg. 182
pg. 380->386

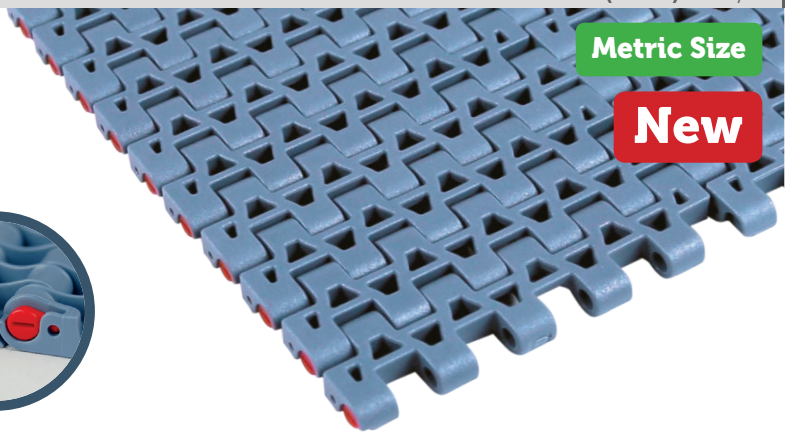

*Material

LFA - Code 01
Low friction Acetal

Max w. load: 1712 LBS/FT /25500 N/m
Weight: 1.66 LBS/FT²/8,1 kg/m²
Temp. range dry: -40÷176°F/-40÷80 °C
Temp. range wet: -40÷149°F/-40÷65 °C
Pin material: PBT white

MX - Code 03
Performance PBT

Max w. load: 1370 LBS/FT /20000 N/m
Weight: 1.60 LBS/FT²/7,8 kg/m²
Temp. range dry: -40÷248°F/-40÷120 °C
Temp. range wet: -40÷140°F/-40÷60 °C
Pin material: POM grey

DKM - Code 16
Aramide Reinforced Acetal

Max w. load: 1712 LBS/FT /25000 N/m
Weight: 1.66 LBS/FT²/8,1 kg/m²
Temp. range dry: -40÷176°F/-40÷80 °C
Temp. range wet: -40÷149°F/-40÷65 °C
Pin material: PBT white

MWX - Code 17
Polyamide Composite

Max w. load: 1712 LBS/FT /25000 N/m
Weight: 1.72 LBS/FT²/8,4 kg/m²
Temp. range dry: -40÷219°F/-40÷104 °C
Temp. range wet: NR
Pin material: PBT white

MP - Code 13
Lubricated Acetal

Max w. load: 1712 LBS/FT /25000 N/m
Weight: 1.66 LBS/FT²/8,1 kg/m²
Temp. range dry: -40÷176°F/-40÷80 °C
Temp. range wet: -40÷149°F/-40÷65 °C
Pin material: PBT white

Version A - Standard

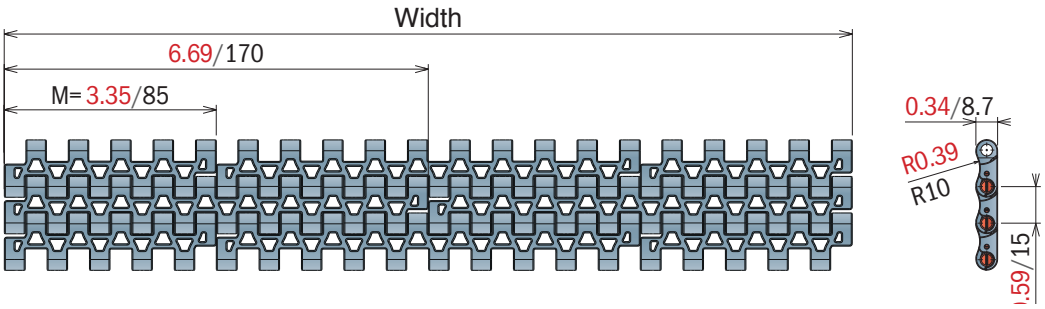

Version B - With 1 Positioner

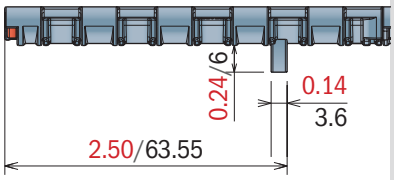

Version C - With 2 Positioner

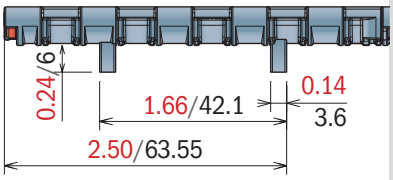

Version A - Standard

Series	Material	Width	Version
5262	*	0085	A
5262	*	0170	A
5262	*	0255	A
5262	*	0340	A
5262	*	0425	A
5262	*	0510	A
5262	*	0595	A
5262	*	0680	A
5262	*	0765	A
5262	*	0850	A
5262	*	0935	A
5262	*	1020	A
5262	*	1105	A
5262	*	1190	A
5262	*	1275	A
5262	*	1360	A
5262	*	1445	A
5262	*	1530	A

Version B - With 1 Positioner

Series	Material	Width	Version
5262	*	0085	B
5262	*	0170	B
5262	*	0255	B
5262	*	0340	B
5262	*	0425	B
5262	*	0510	B
5262	*	0595	B
5262	*	0680	B
5262	*	0765	B
5262	*	0850	B
5262	*	0935	B
5262	*	1020	B
5262	*	1105	B
5262	*	1190	B
5262	*	1275	B
5262	*	1360	B
5262	*	1445	B
5262	*	1530	B

Version C - With 2 Positioners

Series	Material	Width	Version
5262	*	0085	C
5262	*	0170	C
5262	*	0255	C
5262	*	0340	C
5262	*	0425	C
5262	*	0510	C
5262	*	0595	C
5262	*	0680	C
5262	*	0765	C
5262	*	0850	C
5262	*	0935	C
5262	*	1020	C
5262	*	1105	C
5262	*	1190	C
5262	*	1275	C
5262	*	1360	C
5262	*	1445	C
5262	*	1530	C

525 HD GT

Modular Belt Series 525 HD GT, H=8,7 M=85

Backflex radius min. (in-min): 0.98/25

CODE STRUCTURE GUIDE (Example)			
5263	03	0340	C
Series	*Material	Width	Version

pg. 182
pg. 380->386

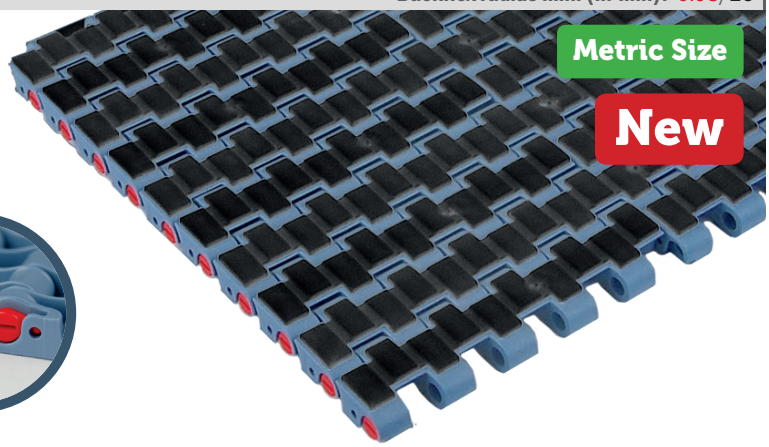

*Material

LFA - Code 01
Low friction Acetal

Max w. load: 1750 LBS/FT /25500 N/m
Weight: 2.12 LBS/FT²/10,35 kg/m²
Temp. range dry: -40÷176°F/-40÷80 °C
Temp. range wet: -40÷149°F/-40÷65 °C
Pin material: PBT white
Hardness: 75 ShA

PP - Code 02
Polypropylene

Max w. load: 1065 LBS/FT /15500 N/m
Weight: 1.78 LBS/FT²/8,7 kg/m²
Temp. range dry: 39,2÷176°F/-40÷80 °C
Temp. range wet: 39,2÷149°F/-40÷65 °C
Pin material: PP blu
Hardness: 75 ShA

MX - Code 03
Performance PBT

Max w. load: 1405 LBS/FT /20500 N/m
Weight: 2.12 LBS/FT²/10,35 kg/m²
Temp. range dry: -40÷248°F/-40÷120 °C
Temp. range wet: -40÷140°F/-40÷60 °C
Pin material: POM grey
Hardness: 75 ShA

Version A - Standard

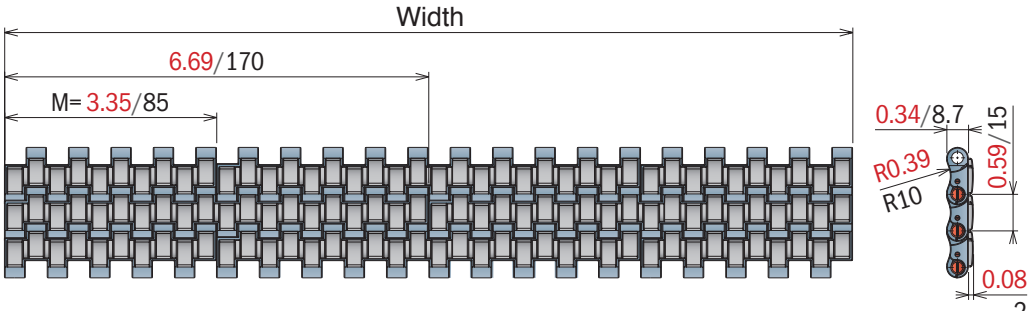

Version B - With 1 Positioner

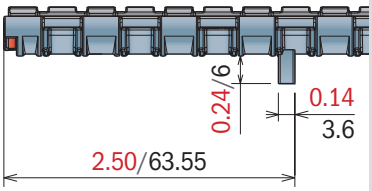

Version C - With 2 Positioner

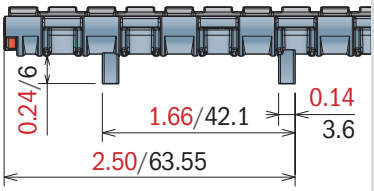

Version A - Standard

Series	Material	Width	Version
5263	*	0085	A
5263	*	0170	A
5263	*	0255	A
5263	*	0340	A
5263	*	0425	A
5263	*	0510	A
5263	*	0595	A
5263	*	0680	A
5263	*	0765	A
5263	*	0850	A
5263	*	0935	A
5263	*	1020	A
5263	*	1105	A
5263	*	1190	A
5263	*	1275	A
5263	*	1360	A
5263	*	1445	A
5263	*	1530	A

Version B - With 1 Positioner

Series	Material	Width	Version
5263	*	0085	B
5263	*	0170	B
5263	*	0255	B
5263	*	0340	B
5263	*	0425	B
5263	*	0510	B
5263	*	0595	B
5263	*	0680	B
5263	*	0765	B
5263	*	0850	B
5263	*	0935	B
5263	*	1020	B
5263	*	1105	B
5263	*	1190	B
5263	*	1275	B
5263	*	1360	B
5263	*	1445	B
5263	*	1530	B

Version C - With 2 Positioners

Series	Material	Width	Version
5263	*	0085	C
5263	*	0170	C
5263	*	0255	C
5263	*	0340	C
5263	*	0425	C
5263	*	0510	C
5263	*	0595	C
5263	*	0680	C
5263	*	0765	C
5263	*	0850	C
5263	*	0935	C
5263	*	1020	C
5263	*	1105	C
5263	*	1190	C
5263	*	1275	C
5263	*	1360	C
5263	*	1445	C
5263	*	1530	C

525 HD GT *Side indent*

Modular Belt Series 525 HD GT Side Indent, *H=8,7 M=85*

Backflex radius min. (in-min): 0.98/25

CODE STRUCTURE GUIDE (Example)			
5265	03	0340	C
Series	*Material	Width	Version

pg. 182

pg. 380->386

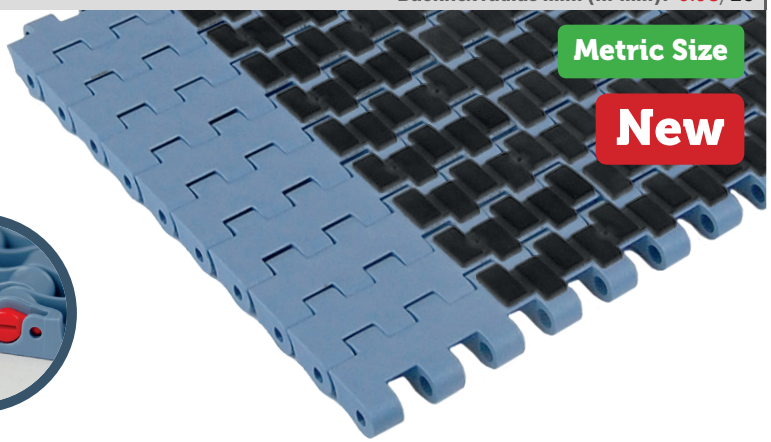

*Material

LFA - Code 01
Low friction Acetal

Max w. load:	1750 LBS/FT / 25500 N/m
Weight:	2.12 LBS/FT² / 10,35 kg/m²
Temp. range dry:	-40÷176°F/-40÷80 °C
Temp. range wet:	-40÷149°F/-40÷65 °C
Pin material:	PBT white
Hardness:	75 ShA

PP - Code 02
Polypropylene

Max w. load:	1065 LBS/FT / 15500 N/m
Weight:	1.78 LBS/FT² / 8,7 kg/m²
Temp. range dry:	39,2÷176°F/-40÷80 °C
Temp. range wet:	39,2÷149°F/-40÷65 °C
Pin material:	PP blu
Hardness:	75 ShA

MX - Code 03
Performance PBT

Max w. load:	1405 LBS/FT / 20500 N/m
Weight:	2.12 LBS/FT² / 10,35 kg/m²
Temp. range dry:	-40÷248°F/-40÷120 °C
Temp. range wet:	-40÷140°F/-40÷60 °C
Pin material:	POM grey
Hardness:	75 ShA

Version A - Standard

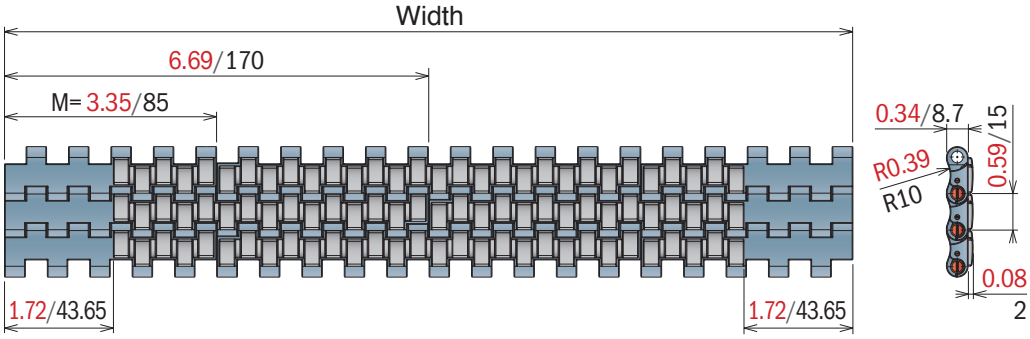

Version B - With 1 Positioner

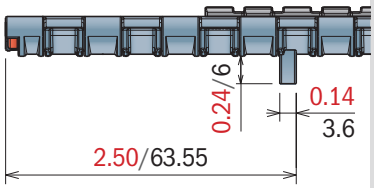

Version C - With 2 Positioner

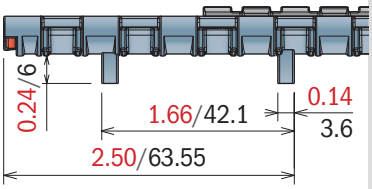

Version A - Standard

Series	Material	Width	Version
5265	*	0255	A
5265	*	0340	A
5265	*	0425	A
5265	*	0510	A
5265	*	0595	A
5265	*	0680	A
5265	*	0765	A
5265	*	0850	A
5265	*	0935	A
5265	*	1020	A
5265	*	1105	A
5265	*	1190	A
5265	*	1275	A
5265	*	1360	A
5265	*	1445	A
5265	*	1530	A

Version B - With 1 Positioner

Series	Material	Width	Version
5265	*	0255	B
5265	*	0340	B
5265	*	0425	B
5265	*	0510	B
5265	*	0595	B
5265	*	0680	B
5265	*	0765	B
5265	*	0850	B
5265	*	0935	B
5265	*	1020	B
5265	*	1105	B
5265	*	1190	B
5265	*	1275	B
5265	*	1360	B
5265	*	1445	B
5265	*	1530	B

Version C - With 2 Positioners

Series	Material	Width	Version
5265	*	0255	C
5265	*	0340	C
5265	*	0425	C
5265	*	0510	C
5265	*	0595	C
5265	*	0680	C
5265	*	0765	C
5265	*	0850	C
5265	*	0935	C
5265	*	1020	C
5265	*	1105	C
5265	*	1190	C
5265	*	1275	C
5265	*	1360	C
5265	*	1445	C
5265	*	1530	C

530

Imperial Size

Pitch 15 mm
H= 8,7 mm

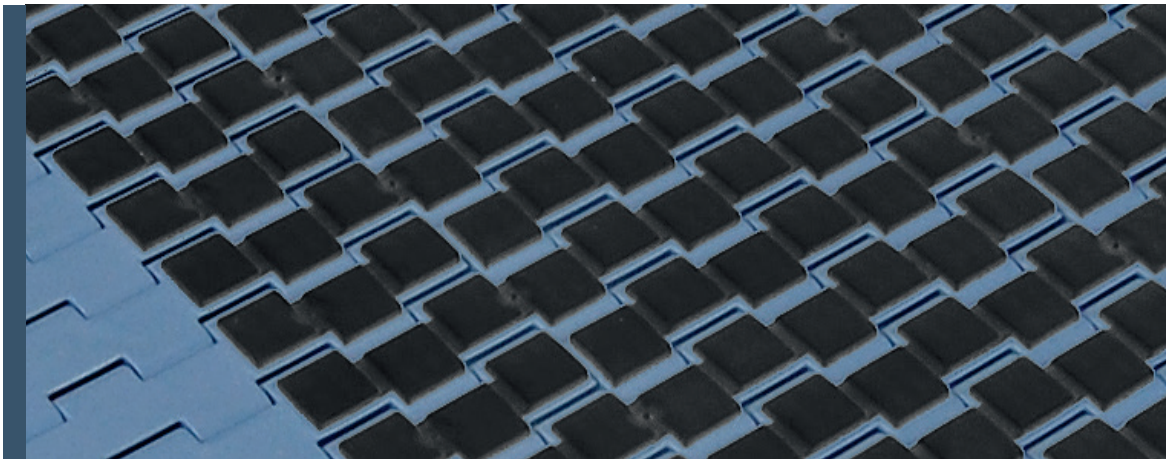

530 FT

530 FTT

530 GT

550 GT *Side indent*

530 LBP

530 FT

Modular Belt Series 530 FT, H=8,7 M=3"

Backflex radius min. (in-min): 0.98/25

CODE STRUCTURE GUIDE (Example)			
5321	01	0030	A
Series	*Material	Width	Version

pg. 182
pg. 380->386

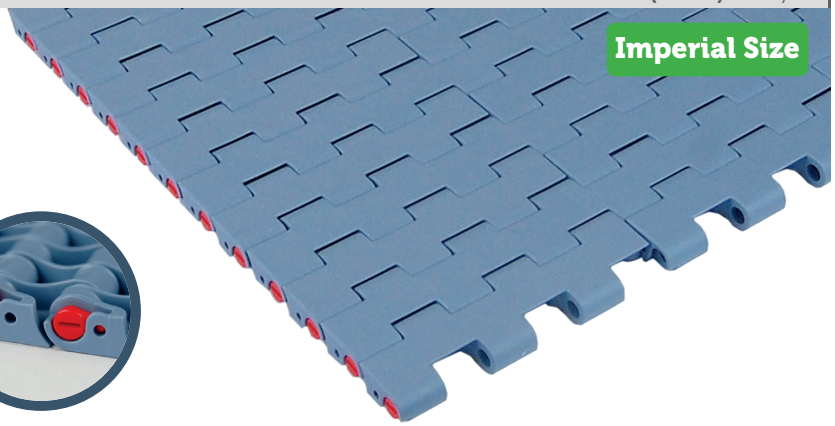

*Material

LFA - Code 01
Low friction Acetal

Max w. load: 1781 LBS/FT /26000 N/m
Weight: 1.88 LBS/FT²/9,2 kg/m²
Temp. range dry: -40÷176°F/-40÷80 °C
Temp. range wet: -40÷149°F/-40÷65 °C
Pin material: PBT white

MX - Code 03
Performance PBT

Max w. load: 1440 LBS/FT /21000 N/m
Weight: 1.84 LBS/FT²/9,0 kg/m²
Temp. range dry: -40÷248°F/-40÷120 °C
Temp. range wet: -40÷140°F/-40÷60 °C
Pin material: POM grey

DKM - Code 16
Aramide Reinforced Acetal

Max w. load: 1781 LBS/FT /26000 N/m
Weight: 1.88 LBS/FT²/9,2 kg/m²
Temp. range dry: -40÷176°F/-40÷80 °C
Temp. range wet: -40÷149°F/-40÷65 °C
Pin material: PBT white

MWX - Code 17
Polyamide Composite

Max w. load: 1781 LBS/FT /26000 N/m
Weight: 1.95 LBS/FT²/9,5 kg/m²
Temp. range dry: -40÷219°F/-40÷104 °C
Temp. range wet: NR
Pin material: PBT white

MP - Code 13
Lubricated Acetal

Max w. load: 1781 LBS/FT /26000 N/m
Weight: 1.88 LBS/FT²/9,2 kg/m²
Temp. range dry: -40÷176°F/-40÷80 °C
Temp. range wet: -40÷149°F/-40÷65 °C
Pin material: PBT white

Version A - Standard

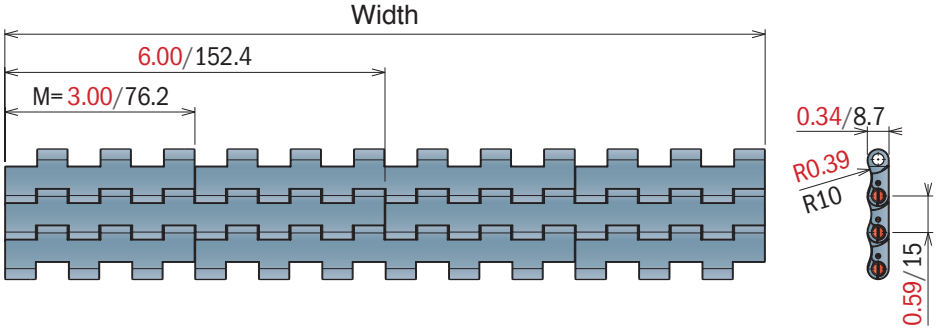

Version A - Standard

Series	Material	Width	Version
5321	*	0003	A
5321	*	0006	A
5321	*	0009	A
5321	*	0012	A
5321	*	0015	A
5321	*	0018	A
5321	*	0021	A
5321	*	0024	A
5321	*	0027	A
5321	*	0030	A
5321	*	0033	A
5321	*	0036	A
5321	*	0039	A
5321	*	0042	A
5321	*	0045	A
5321	*	0048	A
5321	*	0051	A
5321	*	0054	A

530 FTT

Modular Belt Series 530 FTT, H=8,7 M=3"

Backflex radius min. (in-min): 0.98/25

CODE STRUCTURE GUIDE (Example)			
5326	01	0006	A
Series	*Material	Width	Version

pg. 182
pg. 380->386

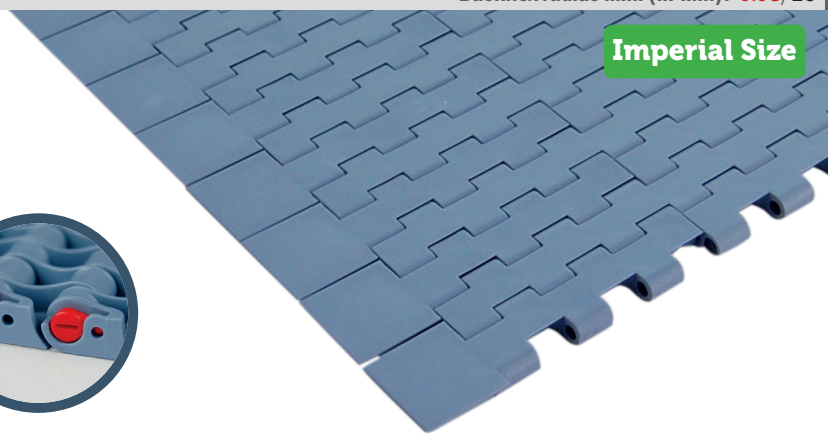

*Material

LFA - Code 01
Low friction Acetal

Max w. load: 1781 LBS/FT /26000 N/m
Weight: 1.88 LBS/FT²/9,2 kg/m²
Temp. range dry: -40÷176°F/-40÷80 °C
Temp. range wet: -40÷149°F/-40÷65 °C
Pin material: PBT white

MX - Code 03
Performance PBT

Max w. load: 1440 LBS/FT /21000 N/m
Weight: 1.84 LBS/FT²/9,0 kg/m²
Temp. range dry: -40÷248°F/-40÷120 °C
Temp. range wet: -40÷140°F/-40÷60 °C
Pin material: POM grey

DKM - Code 16
Aramide Reinforced Acetal

Max w. load: 1781 LBS/FT /26000 N/m
Weight: 1.88 LBS/FT²/9,2 kg/m²
Temp. range dry: -40÷176°F/-40÷80 °C
Temp. range wet: -40÷149°F/-40÷65 °C
Pin material: PBT white

MWX - Code 17
Polyamide Composite

Max w. load: 1781 LBS/FT /26000 N/m
Weight: 1.95 LBS/FT²/9,5 kg/m²
Temp. range dry: -40÷219°F/-40÷104 °C
Temp. range wet: NR
Pin material: PBT white

MP - Code 13
Lubricated Acetal

Max w. load: 1781 LBS/FT /26000 N/m
Weight: 1.88 LBS/FT²/9,2 kg/m²
Temp. range dry: -40÷176°F/-40÷80 °C
Temp. range wet: -40÷149°F/-40÷65 °C
Pin material: PBT white

Version A - Standard

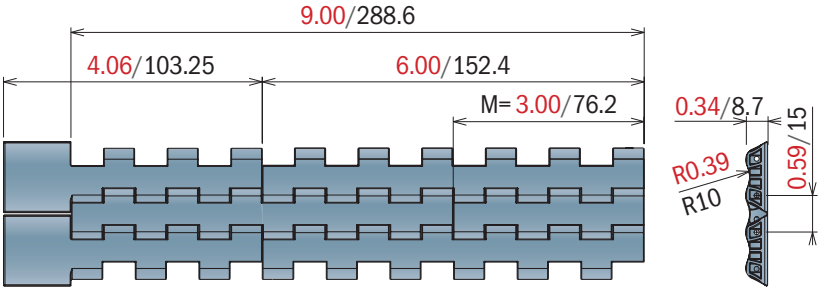

Version A - Standard

Series	Material	Width	Version
5326	*	0003	A
5326	*	0006	A
5326	*	0009	A

530 GT

Modular Belt Series 530 GT, H=8,7 M=3”

Backflex radius min. (in-min): 1.18/30

CODE STRUCTURE GUIDE (Example)			
5323	01	0009	A
Series	*Material	Width	Version

pg. 182
pg. 380->386

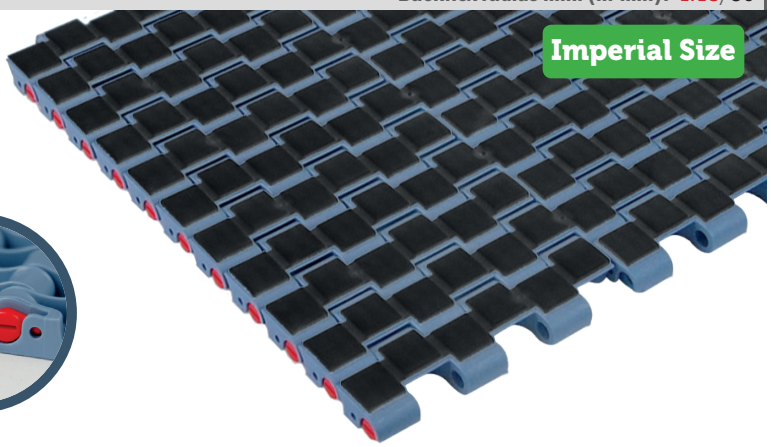

*Material

LFA - Code 01
Low friction Acetal

Max w. load: 1781LBS/FT /26000 N/m
Weight: 2.17 LBS/FT²/10,6 kg/m²
Temp. range dry: -40÷176°F/-40÷80 °C
Temp. range wet: -40÷149°F/-40÷65 °C
Pin material: PBT white
Hardness: 75 ShA

PP - Code 02
Polypropylene

Max w. load: 1096 LBS/FT /16000 N/m
Weight: 1.84 LBS/FT²/9,0 kg/m²
Temp. range dry: 39,2÷176°F/-40÷80 °C
Temp. range wet: 39,2÷149°F/-40÷65 °C
Pin material: PP blu
Hardness: 75 ShA

MX - Code 03
Performance PBT

Max w. load: 1440 LBS/FT /21000 N/m
Weight: 2.17 LBS/FT²/10,6 kg/m²
Temp. range dry: -40÷248°F/-40÷120 °C
Temp. range wet: -40÷140°F/-40÷60 °C
Pin material: POM grey
Hardness: 75 ShA

Version A - Standard

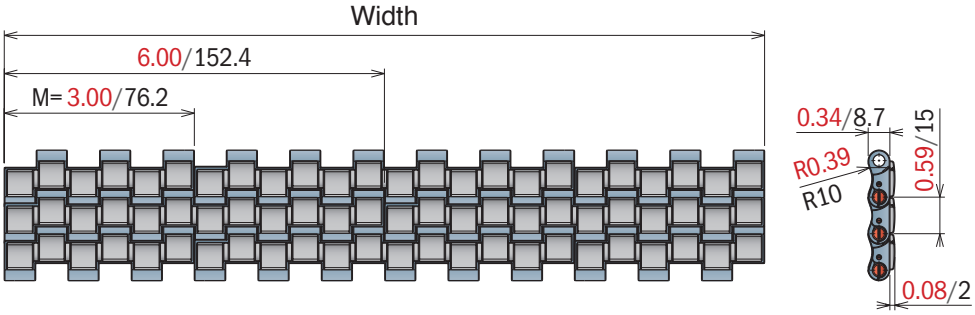

Version A - Standard

Series	Material	Width	Version
5323	*	0003	A
5323	*	0006	A
5323	*	0009	A
5323	*	0012	A
5323	*	0015	A
5323	*	0018	A
5323	*	0021	A
5323	*	0024	A
5323	*	0027	A
5323	*	0030	A
5323	*	0033	A
5323	*	0036	A
5323	*	0039	A
5323	*	0042	A
5323	*	0045	A
5323	*	0048	A
5323	*	0051	A
5323	*	0054	A

530 GT *Side indent*

Modular Belt Series 530 GT, H=8,7 M=3"

Backflex radius min. (in-min): 1.18/30

CODE STRUCTURE GUIDE (Example)			
5325	01	0027	A
Series	*Material	Width	Version

pg. 182

pg. 380->386

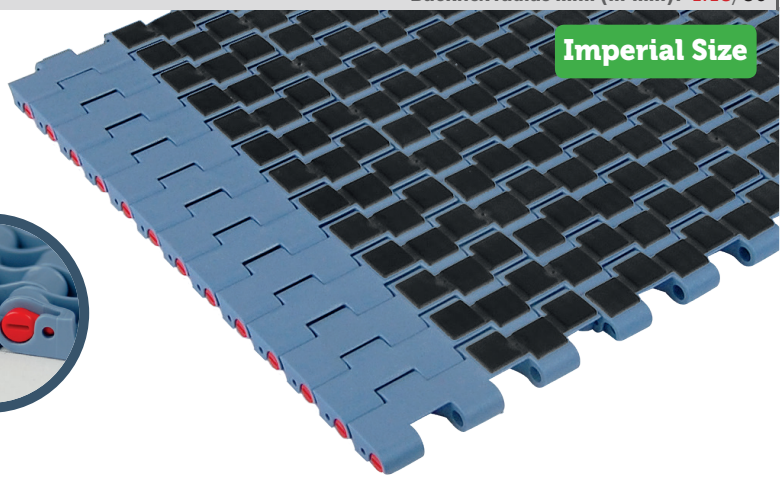

*Material

LFA - Code 01
Low friction Acetal

Max w. load: 1781LBS/FT /26000 N/m
Weight: 2.17 LBS/FT²/10,6 kg/m²
Temp. range dry: -40÷176°F/-40÷80 °C
Temp. range wet: -40÷149°F/-40÷65 °C
Pin material: PBT white
Hardness: 75 ShA

PP - Code 02
Polypropylene

Max w. load: 1096 LBS/FT /16000 N/m
Weight: 1.84 LBS/FT²/9,0 kg/m²
Temp. range dry: 39,2÷176°F/-40÷80 °C
Temp. range wet: 39,2÷149°F/-40÷65 °C
Pin material: PP blu
Hardness: 75 ShA

MX - Code 03
Performance PBT

Max w. load: 1440 LBS/FT /21000 N/m
Weight: 2.17 LBS/FT²/10,6 kg/m²
Temp. range dry: -40÷248°F/-40÷120 °C
Temp. range wet: -40÷140°F/-40÷60 °C
Pin material: POM grey
Hardness: 75 ShA

Version A - Standard

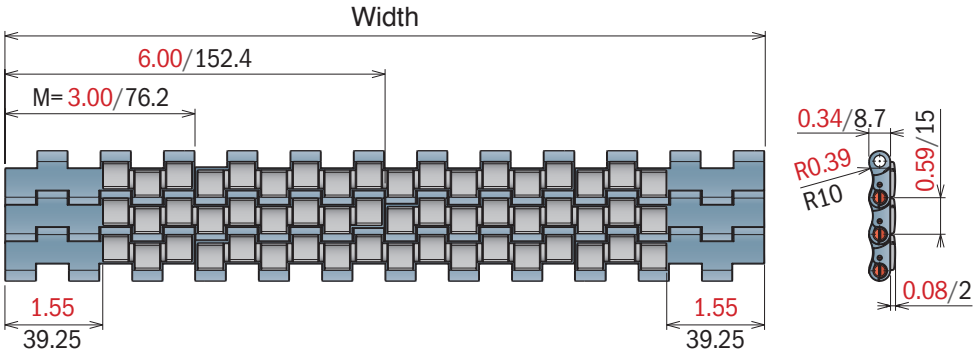

Version A - Standard

Series	Material	Width	Version
5325	*	0009	A
5325	*	0012	A
5325	*	0015	A
5325	*	0018	A
5325	*	0021	A
5325	*	0024	A
5325	*	0027	A
5325	*	0030	A
5325	*	0033	A
5325	*	0036	A
5325	*	0039	A
5325	*	0042	A
5325	*	0045	A
5325	*	0048	A
5325	*	0051	A
5325	*	0054	A

530 LBP

Modular Belt Series 530 LBP, H=8,7 M=3”

Backflex radius min. (in-min): 0.98/25

CODE STRUCTURE GUIDE (Example)			
5324	01	0012	A
Series	*Material	Width	Version

pg. 182

pg. 380->386

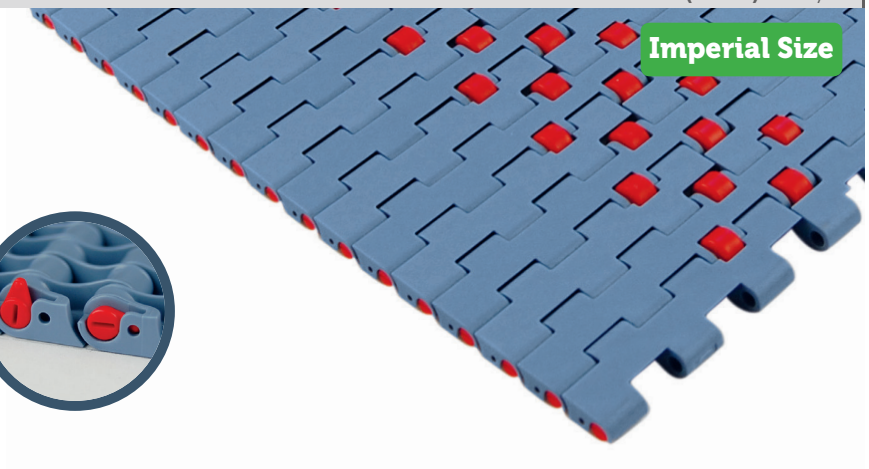

Version A - Standard

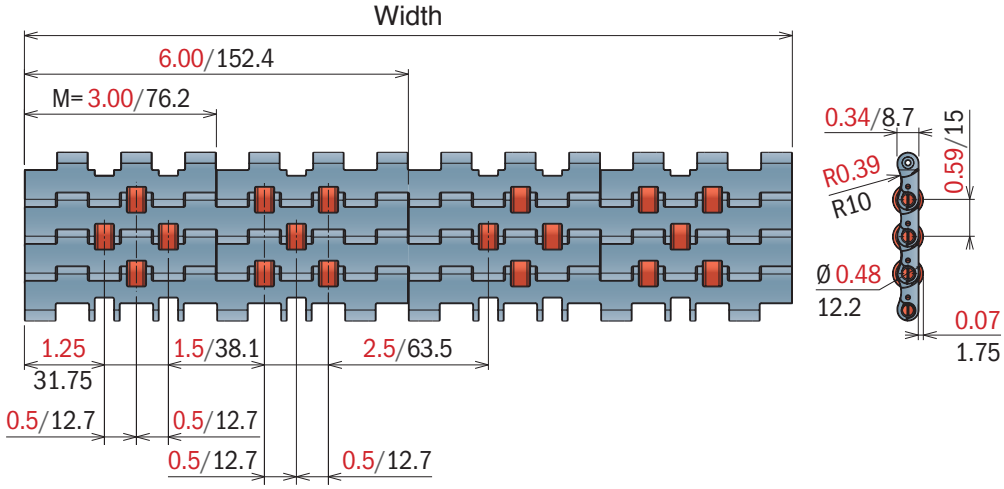

***Material**

LFA - Code 01

Low friction Acetal

Max w. load: 1781 LBS/FT /26000 N/m
Weight: 1.88 LBS/FT²/9,2 kg/m²
Temp. range dry: -40÷176°F/-40÷80 °C
Temp. range wet: -40÷149°F/-40÷65 °C
Pin material: PBT white

Version A - Standard

Series	Material	Width	Version
5324	*	0006	A
5324	*	0012	A
5324	*	0018	A
5324	*	0024	A
5324	*	0030	A
5324	*	0036	A
5324	*	0042	A
5324	*	0048	A
5324	*	0054	A

550

Metric Size

Pitch 25,4 mm
H= 8,7 mm

550 FT

550 *One track Belt*

550 FTT

550 FG

550 FG *One track Belt*

550 GT

550 GT *Side indent*

550 FT

Modular Belt Series 550 FT, H=8,7 M=85

Backflex radius min. (in-min): 0.98/25

CODE STRUCTURE GUIDE (Example)			
5221	01	0255	A
Series	*Material	Width	Version

pg. 184-185
pg. 380->386

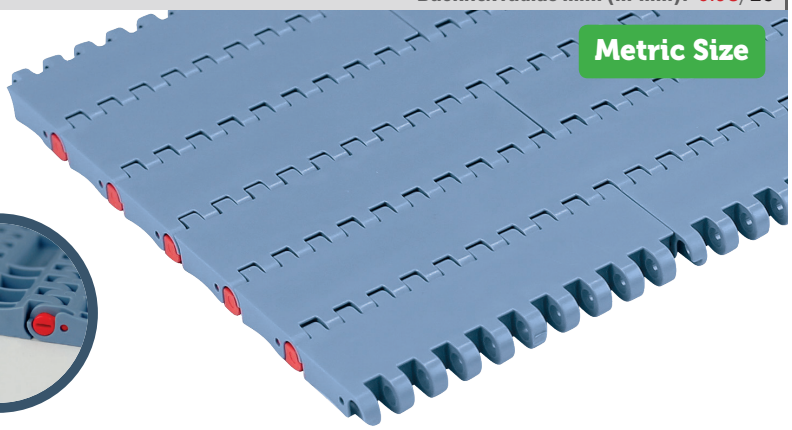

*Material

LFA - Code 01
Low friction Acetal

Max w. load: 1885 LBS/FT /27500 N/m
Weight: 1.74 LBS/FT²/8,5 kg/m²
Temp. range dry: -40÷176°F/-40÷80 °C
Temp. range wet: -40÷149°F/-40÷65 °C
Pin material: PBT white

MX - Code 03
Performance PBT

Max w. load: 1200 LBS/FT /22000 N/m
Weight: 1.54 LBS/FT²/8,2 kg/m²
Temp. range dry: -40÷248°F/-40÷120 °C
Temp. range wet: -40÷140°F/-40÷60 °C
Pin material: POM grey

DKM - Code 16
Aramide Reinforced Acetal

Max w. load: 1885 LBS/FT /27500 N/m
Weight: 1.74 LBS/FT²/8,5 kg/m²
Temp. range dry: -40÷176°F/-40÷80 °C
Temp. range wet: -40÷149°F/-40÷65 °C
Pin material: PBT white

MWX - Code 17
Polyamide Composite

Max w. load: 1885 LBS/FT /27500 N/m
Weight: 1.82 LBS/FT²/8,9 kg/m²
Temp. range dry: -40÷219°F/-40÷104 °C
Temp. range wet: NR
Pin material: PBT white

MP - Code 13
Lubricated Acetal

Max w. load: 1885 LBS/FT /27500 N/m
Weight: 1.74 LBS/FT²/8,5 kg/m²
Temp. range dry: -40÷176°F/-40÷80 °C
Temp. range wet: -40÷149°F/-40÷65 °C
Pin material: PBT white

Version A - Standard

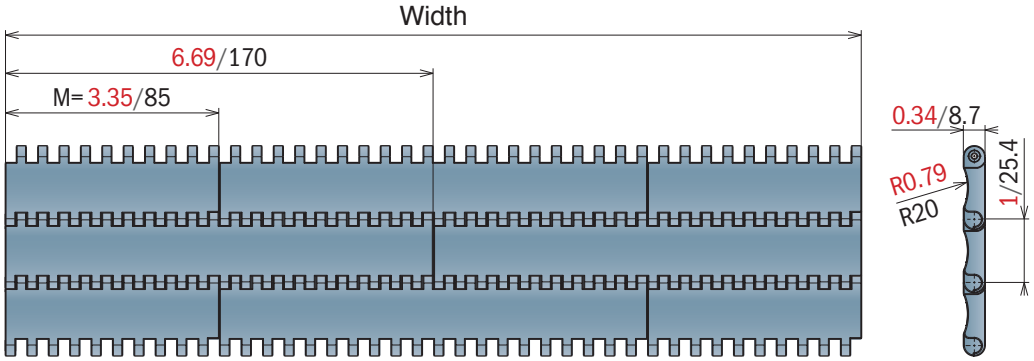

Version B - With 1 Positioner

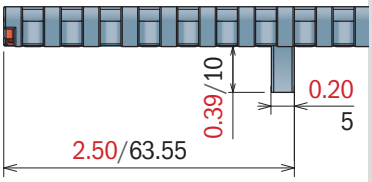

Version C - With 2 Positioner

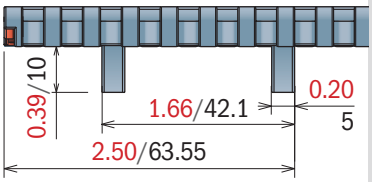

Version A - Standard

Series	Material	Width	Version
5221	*	0085	A
5221	*	0170	A
5221	*	0255	A
5221	*	0340	A
5221	*	0425	A
5221	*	0510	A
5221	*	0595	A
5221	*	0680	A
5221	*	0765	A
5221	*	0850	A
5221	*	0935	A
5221	*	1020	A
5221	*	1105	A
5221	*	1190	A
5221	*	1275	A
5221	*	1360	A
5221	*	1445	A
5221	*	1530	A

Version B - With 1 Positioner

Series	Material	Width	Version
5221	*	0085	B
5221	*	0170	B
5221	*	0255	B
5221	*	0340	B
5221	*	0425	B
5221	*	0510	B
5221	*	0595	B
5221	*	0680	B
5221	*	0765	B
5221	*	0850	B
5221	*	0935	B
5221	*	1020	B
5221	*	1105	B
5221	*	1190	B
5221	*	1275	B
5221	*	1360	B
5221	*	1445	B
5221	*	1530	B

Version C - With 2 Positioners

Series	Material	Width	Version
5221	*	0085	C
5221	*	0170	C
5221	*	0255	C
5221	*	0340	C
5221	*	0425	C
5221	*	0510	C
5221	*	0595	C
5221	*	0680	C
5221	*	0765	C
5221	*	0850	C
5221	*	0935	C
5221	*	1020	C
5221	*	1105	C
5221	*	1190	C
5221	*	1275	C
5221	*	1360	C
5221	*	1445	C
5221	*	1530	C

550 FT *One track Belt* *Modular Belt Series 550 FT, H=8,7 K330*

Backflex radius min. (in-min): 0.98/25

CODE STRUCTURE GUIDE (Example)			
5221	03	9330	A
Series	*Material	Width	Version

pg. 184-185
pg. 380->386

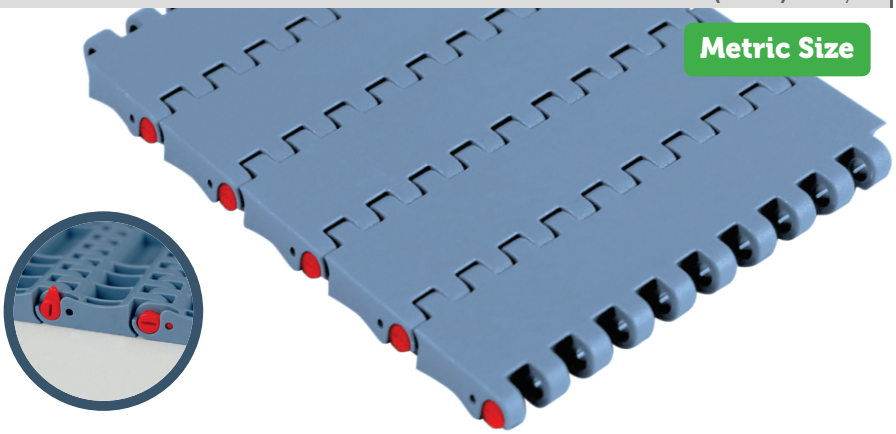

*Material

LFA - Code 01
Low friction Acetal

Max w. load: 1885 LBS/FT /27500 N/m
Weight: 1.74 LBS/FT²/8,5 kg/m²
Temp. range dry: -40÷176°F/-40÷80 °C
Temp. range wet: -40÷149°F/-40÷65 °C
Pin material: PBT white

MX - Code 03
Performance PBT

Max w. load: 1200 LBS/FT /22000 N/m
Weight: 1.54 LBS/FT²/8,2 kg/m²
Temp. range dry: -40÷248°F/-40÷120 °C
Temp. range wet: -40÷140°F/-40÷60 °C
Pin material: POM grey

DKM - Code 16
Aramide Reinforced Acetal

Max w. load: 1885 LBS/FT /27500 N/m
Weight: 1.74 LBS/FT²/8,5 kg/m²
Temp. range dry: -40÷176°F/-40÷80 °C
Temp. range wet: -40÷149°F/-40÷65 °C
Pin material: PBT white

MWX - Code 17
Polyamide Composite

Max w. load: 1885 LBS/FT /27500 N/m
Weight: 1.82 LBS/FT²/8,9 kg/m²
Temp. range dry: -40÷219°F/-40÷104 °C
Temp. range wet: NR
Pin material: PBT white

MP - Code 13
Lubricated Acetal

Max w. load: 1885 LBS/FT /27500 N/m
Weight: 1.74 LBS/FT²/8,5 kg/m²
Temp. range dry: -40÷176°F/-40÷80 °C
Temp. range wet: -40÷149°F/-40÷65 °C
Pin material: PBT white

Version A - Standard

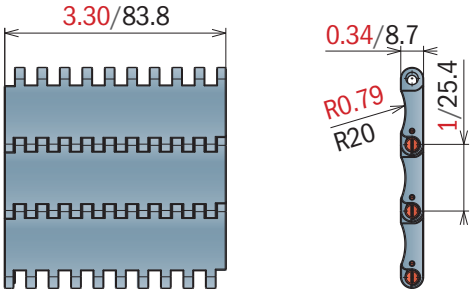

Version C - With 2 Positioner

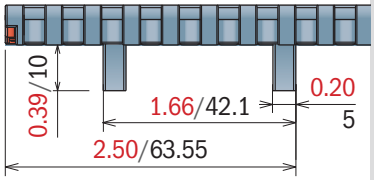

Version A - Standard

Series	Material	Width	Version
5221	*	9330	A

Version C - With 2 Positioners

Series	Material	Width	Version
5221	*	9330	C

550 FTT

Modular Belt Series 550 FTT, H=8,7 M=85

Backflex radius min. (in-min): 0.98/25

CODE STRUCTURE GUIDE (Example)			
5226	03	0255	CN
Series	*Material	Width	Version

pg. 184-185
pg. 380->386

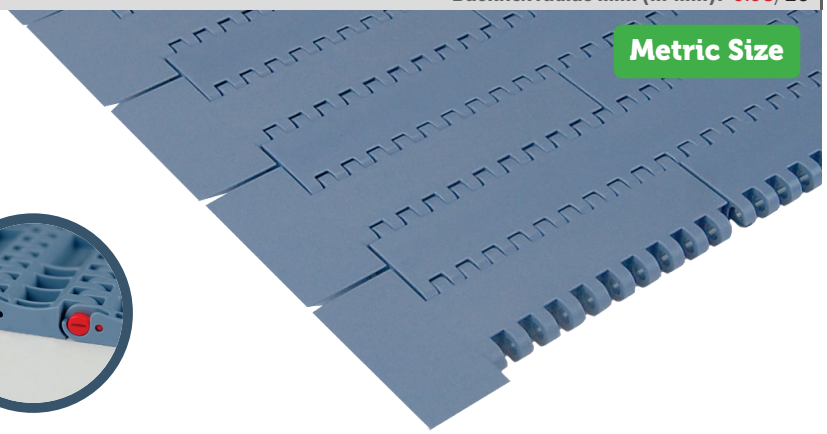

*Material

LFA - Code 01
Low friction Acetal

Max w. load: 1885 LBS/FT /27500 N/m
Weight: 1.74 LBS/FT²/8,5 kg/m²
Temp. range dry: -40÷176°F/-40÷80 °C
Temp. range wet: -40÷149°F/-40÷65 °C
Pin material: PBT white

MX - Code 03
Performance PBT

Max w. load: 1200 LBS/FT /22000 N/m
Weight: 1.54 LBS/FT²/8,2 kg/m²
Temp. range dry: -40÷248°F/-40÷120 °C
Temp. range wet: -40÷140°F/-40÷60 °C
Pin material: POM grey

DKM - Code 16
Aramide Reinforced Acetal

Max w. load: 1885 LBS/FT /27500 N/m
Weight: 1.74 LBS/FT²/8,5 kg/m²
Temp. range dry: -40÷176°F/-40÷80 °C
Temp. range wet: -40÷149°F/-40÷65 °C
Pin material: PBT white

MWX - Code 17
Polyamide Composite

Max w. load: 1885 LBS/FT /27500 N/m
Weight: 1.82 LBS/FT²/8,9 kg/m²
Temp. range dry: -40÷219°F/-40÷104 °C
Temp. range wet: NR
Pin material: PBT white

MP - Code 13
Lubricated Acetal

Max w. load: 1885 LBS/FT /27500 N/m
Weight: 1.74 LBS/FT²/8,5 kg/m²
Temp. range dry: -40÷176°F/-40÷80 °C
Temp. range wet: -40÷149°F/-40÷65 °C
Pin material: PBT white

Version C

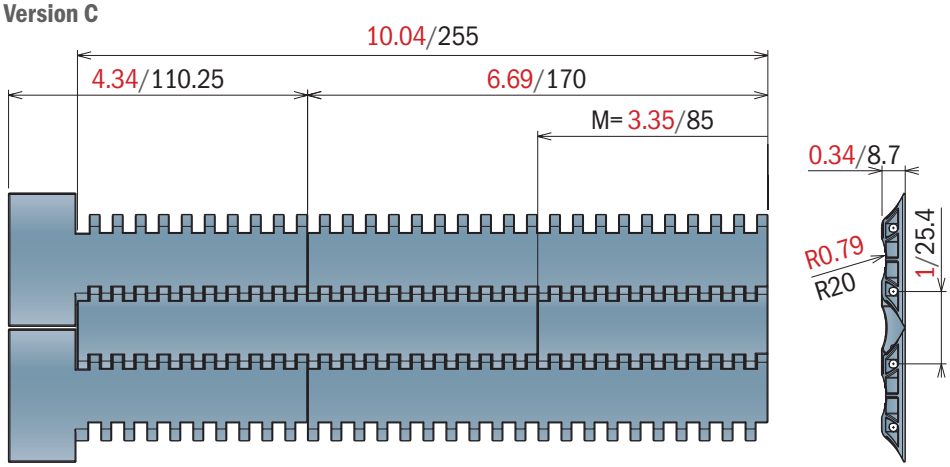

Version CN - Near

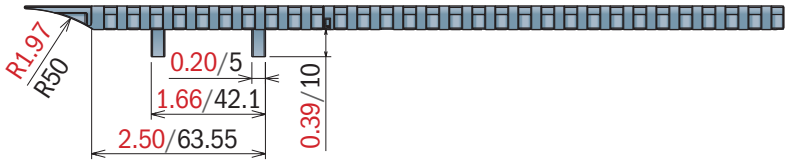

Version CO - Opposite

Version C

Series	Material	Width	Version
5226	*	0085	C

Version CN - Near

Series	Material	Width	Version
5226	*	0170	CN
5226	*	0255	CN

Version CO - Opposite

Series	Material	Width	Version
5226	*	0170	CO
5226	*	0255	CO

550 FG

Modular Belt Series 550 FG, H=8,7 M=85

Backflex radius min. (in-min): 0.98/25

CODE STRUCTURE GUIDE (Example)			
5222	01	0850	C
Series	*Material	Width	Version

pg. 184-185
pg. 380->386

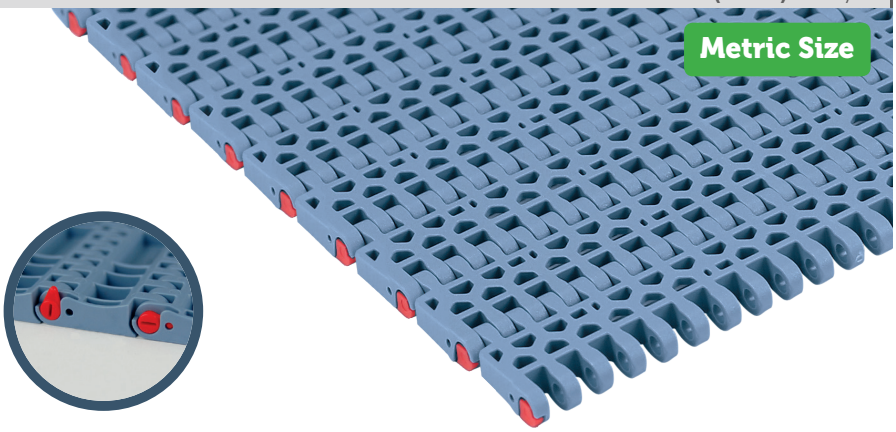

*Material

LFA - Code 01
Low friction Acetal

Max w. load: 1885 LBS/FT /27500 N/m
Weight: 1.43 LBS/FT²/7,0 kg/m²
Temp. range dry: -40÷176°F/-40÷80 °C
Temp. range wet: -40÷149°F/-40÷65 °C
Pin material: PBT white

MX - Code 03
Performance PBT

Max w. load: 1507 LBS/FT /22000 N/m
Weight: 1.37 LBS/FT²/6,7 kg/m²
Temp. range dry: -40÷248°F/-40÷120 °C
Temp. range wet: -40÷140°F/-40÷60 °C
Pin material: POM grey

DKM - Code 16
Aramide Reinforced Acetal

Max w. load: 1885 LBS/FT /27500 N/m
Weight: 1.43 LBS/FT²/7,0 kg/m²
Temp. range dry: -40÷176°F/-40÷80 °C
Temp. range wet: -40÷149°F/-40÷65 °C
Pin material: PBT white

MWX - Code 17
Polyamide Composite

Max w. load: 1885 LBS/FT /27500 N/m
Weight: 1.49 LBS/FT²/7,3 kg/m²
Temp. range dry: -40÷219°F/-40÷104 °C
Temp. range wet: NR
Pin material: PBT white

MP - Code 13
Lubricated Acetal

Max w. load: 1885 LBS/FT /27500 N/m
Weight: 1.43 LBS/FT²/7,0 kg/m²
Temp. range dry: -40÷176°F/-40÷80 °C
Temp. range wet: -40÷149°F/-40÷65 °C
Pin material: PBT white

Version A - Standard

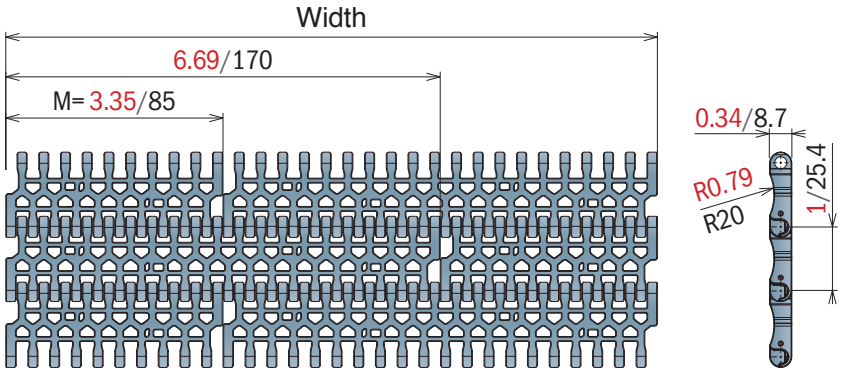

Version B - With 1 Positioner

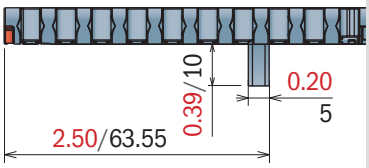

Version C - With 2 Positioner

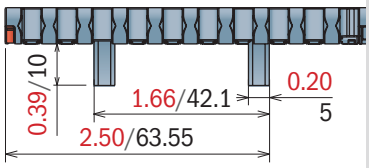

Version A - Standard

Series	Material	Width	Version
5222	*	0085	A
5222	*	0170	A
5222	*	0255	A
5222	*	0340	A
5222	*	0425	A
5222	*	0510	A
5222	*	0595	A
5222	*	0680	A
5222	*	0765	A
5222	*	0850	A
5222	*	0935	A
5222	*	1020	A
5222	*	1105	A
5222	*	1190	A
5222	*	1275	A
5222	*	1360	A
5222	*	1445	A
5222	*	1530	A

Version B - With 1 Positioner

Series	Material	Width	Version
5222	*	0085	B
5222	*	0170	B
5222	*	0255	B
5222	*	0340	B
5222	*	0425	B
5222	*	0510	B
5222	*	0595	B
5222	*	0680	B
5222	*	0765	B
5222	*	0850	B
5222	*	0935	B
5222	*	1020	B
5222	*	1105	B
5222	*	1190	B
5222	*	1275	B
5222	*	1360	B
5222	*	1445	B
5222	*	1530	B

Version C - With 2 Positioners

Series	Material	Width	Version
5222	*	0085	C
5222	*	0170	C
5222	*	0255	C
5222	*	0340	C
5222	*	0425	C
5222	*	0510	C
5222	*	0595	C
5222	*	0680	C
5222	*	0765	C
5222	*	0850	C
5222	*	0935	C
5222	*	1020	C
5222	*	1105	C
5222	*	1190	C
5222	*	1275	C
5222	*	1360	C
5222	*	1445	C
5222	*	1530	C

550 FG *One track Belt*

Modular Belt Series 550 FG, H=8,7 K330

Backflex radius min. (in-min): 0.98/25

CODE STRUCTURE GUIDE (Example)			
5222	01	9330	A
Series	*Material	Width	Version

pg. 184-185

pg. 380->386

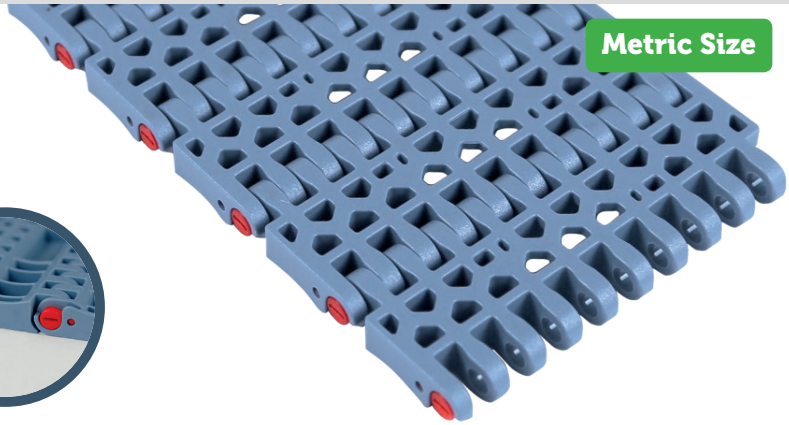

*Material

LFA - Code 01
Low friction Acetal

Max w. load: 1885 LBS/FT /27500 N/m
Weight: 1.43 LBS/FT²/7,0 kg/m²
Temp. range dry: -40÷176°F/-40÷80 °C
Temp. range wet: -40÷149°F/-40÷65 °C
Pin material: PBT white

MX - Code 03
Performance PBT

Max w. load: 1507 LBS/FT /22000 N/m
Weight: 1.37 LBS/FT²/6,7 kg/m²
Temp. range dry: -40÷248°F/-40÷120 °C
Temp. range wet: -40÷140°F/-40÷60 °C
Pin material: POM grey

DKM - Code 16
Aramide Reinforced Acetal

Max w. load: 1885 LBS/FT /27500 N/m
Weight: 1.43 LBS/FT²/7,0 kg/m²
Temp. range dry: -40÷176°F/-40÷80 °C
Temp. range wet: -40÷149°F/-40÷65 °C
Pin material: PBT white

MWX - Code 17
Polyamide Composite

Max w. load: 1885 LBS/FT /27500 N/m
Weight: 1.49 LBS/FT²/7,3 kg/m²
Temp. range dry: -40÷219°F/-40÷104 °C
Temp. range wet: NR
Pin material: PBT white

MP - Code 13
Lubricated Acetal

Max w. load: 1885 LBS/FT /27500 N/m
Weight: 1.43 LBS/FT²/7,0 kg/m²
Temp. range dry: -40÷176°F/-40÷80 °C
Temp. range wet: -40÷149°F/-40÷65 °C
Pin material: PBT white

Version A - Standard

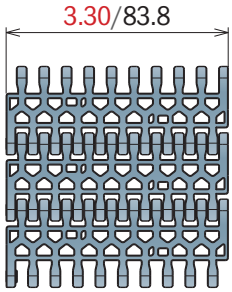

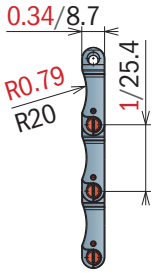

Version C - With 2 Positioner

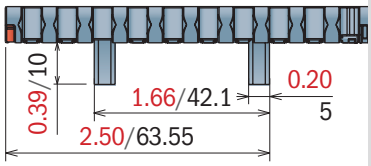

Version A - Standard

Series	Material	Width	Version
5222	*	9330	A

Version C - With 2 Positioners

Series	Material	Width	Version
5222	*	9330	C

550 GT

Modular Belt Series 550 FG, H=8,7 M=85

Backflex radius min. (in-min): 1.18/30

CODE STRUCTURE GUIDE (Example)			
5223	02	1020	A
Series	*Material	Width	Version

pg. 184-185
pg. 380->386

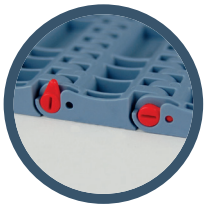

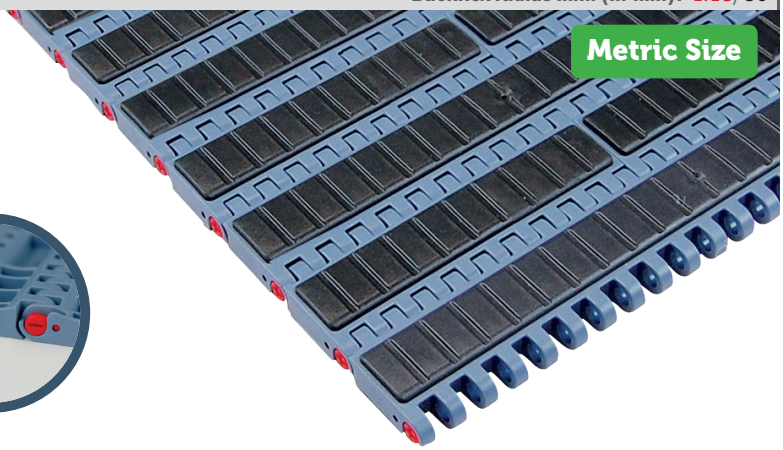

*Material

LFA - Code 01
Low friction Acetal

Max w. load: 1885 LBS/FT / 27500 N/m
Weight: 2.07 LBS/FT² / 10,1 kg/m²
Temp. range dry: -40÷176°F / -40÷80 °C
Temp. range wet: -40÷149°F / -40÷65 °C
Pin material: PBT white
Hardness: 75 ShA

PP - Code 02
Polypropylene

Max w. load: 1130 LBS/FT / 16500 N/m
Weight: 1.72 LBS/FT² / 8,4 kg/m²
Temp. range dry: 39,2÷176°F / -40÷80 °C
Temp. range wet: 39,2÷149°F / -40÷65 °C
Pin material: PP blu
Hardness: 75 ShA

MX - Code 03
Performance PBT

Max w. load: 1475 LBS/FT / 21500 N/m
Weight: 2.15 LBS/FT² / 10,5 kg/m²
Temp. range dry: -40÷248°F / -40÷120 °C
Temp. range wet: -40÷140°F / -40÷60 °C
Pin material: POM grey
Hardness: 75 ShA

Version A - Standard

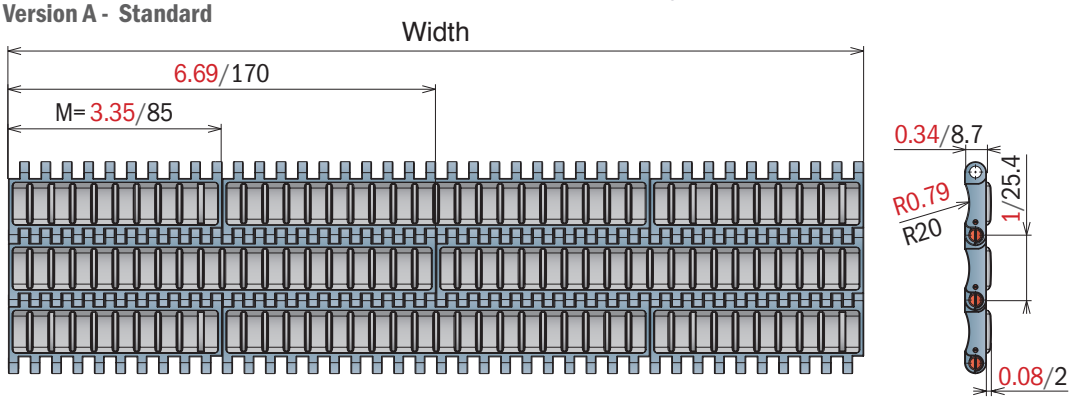

Version B - With 1 Positioner

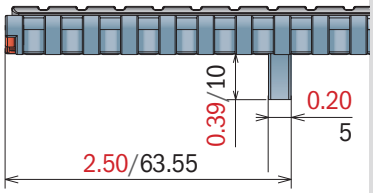

Version C - With 2 Positioner

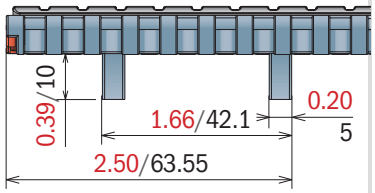

Version A - Standard

Series	Material	Width	Version
5223	*	0085	A
5223	*	0170	A
5223	*	0255	A
5223	*	0340	A
5223	*	0425	A
5223	*	0510	A
5223	*	0595	A
5223	*	0680	A
5223	*	0765	A
5223	*	0850	A
5223	*	0935	A
5223	*	1020	A
5223	*	1105	A
5223	*	1190	A
5223	*	1275	A
5223	*	1360	A
5223	*	1445	A
5223	*	1530	A

Version B - With 1 Positioner

Series	Material	Width	Version
5223	*	0085	B
5223	*	0170	B
5223	*	0255	B
5223	*	0340	B
5223	*	0425	B
5223	*	0510	B
5223	*	0595	B
5223	*	0680	B
5223	*	0765	B
5223	*	0850	B
5223	*	0935	B
5223	*	1020	B
5223	*	1105	B
5223	*	1190	B
5223	*	1275	B
5223	*	1360	B
5223	*	1445	B
5223	*	1530	B

Version C - With 2 Positioners

Series	Material	Width	Version
5223	*	0085	C
5223	*	0170	C
5223	*	0255	C
5223	*	0340	C
5223	*	0425	C
5223	*	0510	C
5223	*	0595	C
5223	*	0680	C
5223	*	0765	C
5223	*	0850	C
5223	*	0935	C
5223	*	1020	C
5223	*	1105	C
5223	*	1190	C
5223	*	1275	C
5223	*	1360	C
5223	*	1445	C
5223	*	1530	C

550 GT Side indent

Modular Belt Series 550 GT, H=8,7 M=85

Backflex radius min. (in-min): 1.18/30

CODE STRUCTURE GUIDE (Example)			
5225	02	0595	B
Series	*Material	Width	Version

pg. 184-185
pg. 380->386

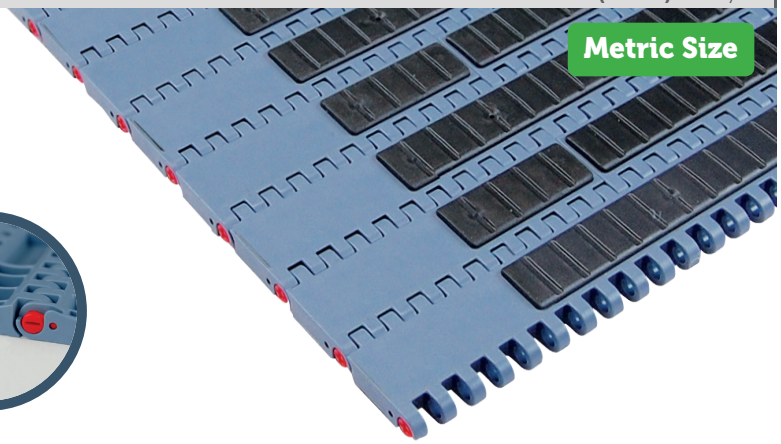

*Material

LFA - Code 01
Low friction Acetal

Max w. load:	1885 LBS/FT /27500 N/m
Weight:	2.00 LBS/FT²/10,1 kg/m²
Temp. range dry:	-40÷176°F/-40÷80 °C
Temp. range wet:	-40÷149°F/-40÷65 °C
Pin material:	PBT white
Hardness:	75 ShA

PP - Code 02
Polypropylene

Max w. load:	1130 LBS/FT /16500 N/m
Weight:	1.68 LBS/FT²/8,4 kg/m²
Temp. range dry:	39,2÷176°F/-40÷80 °C
Temp. range wet:	39,2÷149°F/-40÷65 °C
Pin material:	PP blu
Hardness:	75 ShA

MX - Code 03
Performance PBT

Max w. load:	1475 LBS/FT /21500 N/m
Weight:	2.11 LBS/FT²/10,5 kg/m²
Temp. range dry:	-40÷248°F/-40÷120 °C
Temp. range wet:	-40÷140°F/-40÷60 °C
Pin material:	POM grey
Hardness:	75 ShA

Version A - Standard

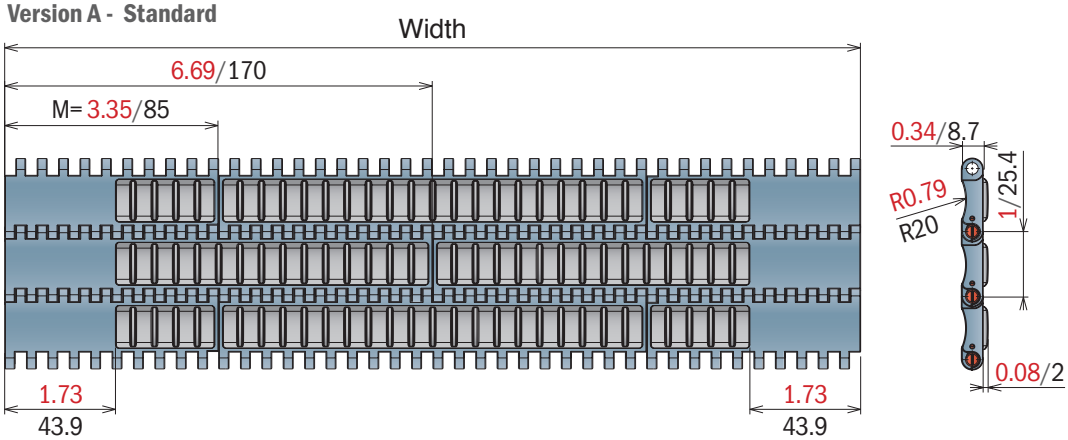

Version B - With 1 Positioner

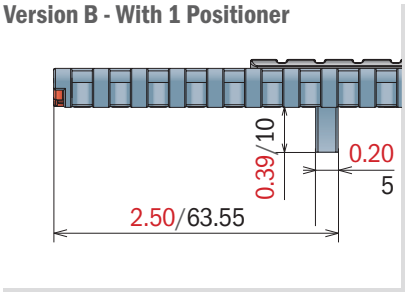

Version C - With 2 Positioner

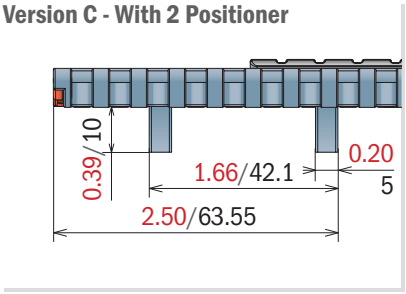

Version A - Standard

Series	Material	Width	Version
5225	*	0255	A
5225	*	0340	A
5225	*	0425	A
5225	*	0510	A
5225	*	0595	A
5225	*	0680	A
5225	*	0765	A
5225	*	0850	A
5225	*	0935	A
5225	*	1020	A
5225	*	1105	A
5225	*	1190	A
5225	*	1275	A
5225	*	1360	A
5225	*	1445	A
5225	*	1530	A

Version B - With 1 Positioner

Series	Material	Width	Version
5225	*	0255	B
5225	*	0340	B
5225	*	0425	B
5225	*	0510	B
5225	*	0595	B
5225	*	0680	B
5225	*	0765	B
5225	*	0850	B
5225	*	0935	B
5225	*	1020	B
5225	*	1105	B
5225	*	1190	B
5225	*	1275	B
5225	*	1360	B
5225	*	1445	B
5225	*	1530	B

Version C - With 2 Positioners

Series	Material	Width	Version
5225	*	0255	C
5225	*	0340	C
5225	*	0425	C
5225	*	0510	C
5225	*	0595	C
5225	*	0680	C
5225	*	0765	C
5225	*	0850	C
5225	*	0935	C
5225	*	1020	C
5225	*	1105	C
5225	*	1190	C
5225	*	1275	C
5225	*	1360	C
5225	*	1445	C
5225	*	1530	C

551

Metric Size

Pitch 25,4 mm
H= 12,7 mm

551 FT
551 FTT
551 GT
551 GT *Side indent*
551 LBP
551 LBP PRO

551 FT

Modular Belt Series 551 FT, H=12,7 M=85

Backflex radius min. (in-min): 0.98/25

CODE STRUCTURE GUIDE (Example)			
5231	01	0680	C
Series	*Material	Width	Version

pg. 186-187
pg. 380->386

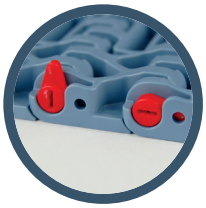

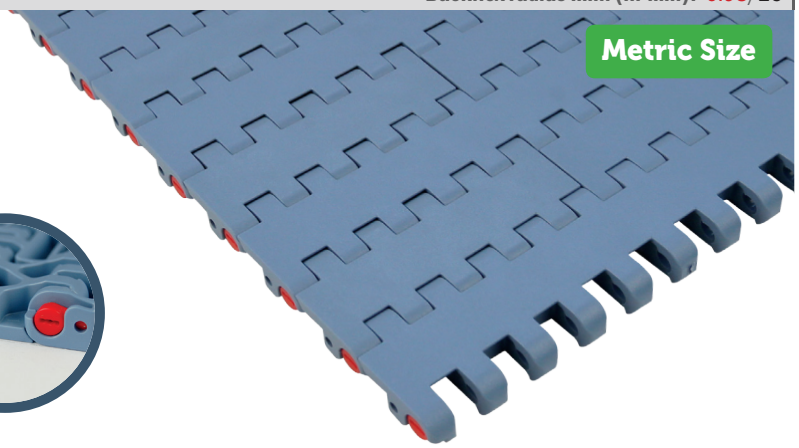

*Material

LFA - Code 01
Low friction Acetal

Max w. load: 2845 LBS/FT / 41500 N/m
Weight: 2.56 LBS/FT² / 12,5 kg/m²
Temp. range dry: -40÷176°F/-40÷80 °C
Temp. range wet: -40÷149°F/-40÷65 °C
Pin material: PBT white

MX - Code 03
Performance PBT

Max w. load: 2296 LBS/FT / 33500 N/m
Weight: 2.46 LBS/FT² / 12,0 kg/m²
Temp. range dry: -40÷248°F/-40÷120 °C
Temp. range wet: -40÷140°F/-40÷60 °C
Pin material: POM grey

DKM - Code 16
Aramide Reinforced Acetal

Max w. load: 2845 LBS/FT / 41500 N/m
Weight: 2.56 LBS/FT² / 12,5 kg/m²
Temp. range dry: -40÷176°F/-40÷80 °C
Temp. range wet: -40÷149°F/-40÷65 °C
Pin material: PBT white

MWX - Code 17
Polyamide Composite

Max w. load: 2845 LBS/FT / 41500 N/m
Weight: 2.66 LBS/FT² / 13,0 kg/m²
Temp. range dry: -40÷219°F/-40÷104 °C
Temp. range wet: NR
Pin material: PBT white

MP - Code 13
Lubricated Acetal

Max w. load: 2845 LBS/FT / 41500 N/m
Weight: 2.56 LBS/FT² / 12,5 kg/m²
Temp. range dry: -40÷176°F/-40÷80 °C
Temp. range wet: -40÷149°F/-40÷65 °C
Pin material: PBT white

Version A - Standard

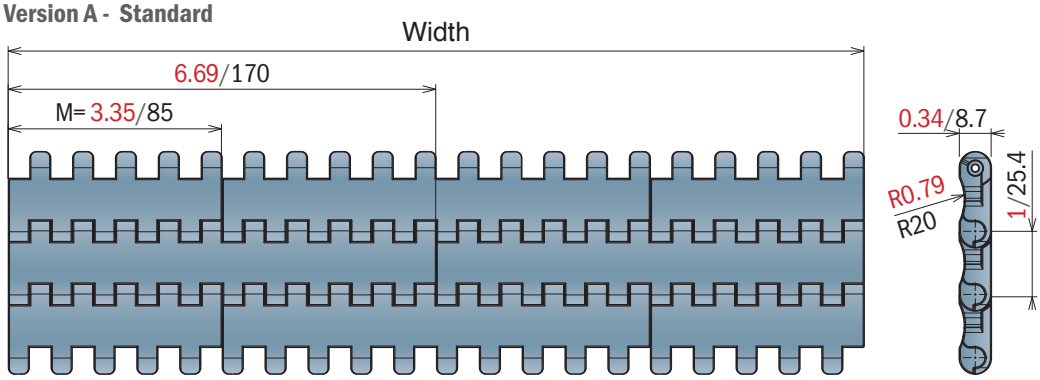

Version B - With 1 Positioner

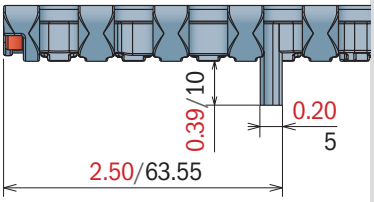

Version C - With 2 Positioner

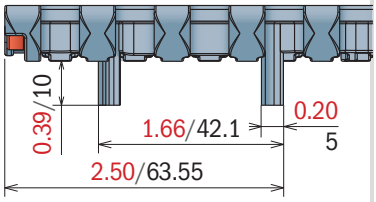

Version A - Standard

Series	Material	Width	Version
5231	*	0085	A
5231	*	0170	A
5231	*	0255	A
5231	*	0340	A
5231	*	0425	A
5231	*	0510	A
5231	*	0595	A
5231	*	0680	A
5231	*	0765	A
5231	*	0850	A
5231	*	0935	A
5231	*	1020	A
5231	*	1105	A
5231	*	1190	A
5231	*	1275	A
5231	*	1360	A
5231	*	1445	A
5231	*	1530	A

Version B - With 1 Positioner

Series	Material	Width	Version
5231	*	0085	B
5231	*	0170	B
5231	*	0255	B
5231	*	0340	B
5231	*	0425	B
5231	*	0510	B
5231	*	0595	B
5231	*	0680	B
5231	*	0765	B
5231	*	0850	B
5231	*	0935	B
5231	*	1020	B
5231	*	1105	B
5231	*	1190	B
5231	*	1275	B
5231	*	1360	B
5231	*	1445	B
5231	*	1530	B

Version C - With 2 Positioners

Series	Material	Width	Version
5231	*	0085	C
5231	*	0170	C
5231	*	0255	C
5231	*	0340	C
5231	*	0425	C
5231	*	0510	C
5231	*	0595	C
5231	*	0680	C
5231	*	0765	C
5231	*	0850	C
5231	*	0935	C
5231	*	1020	C
5231	*	1105	C
5231	*	1190	C
5231	*	1275	C
5231	*	1360	C
5231	*	1445	C
5231	*	1530	C

551 FTT

Modular Belt Series 551 FTT, H=12,7 M=85

Backflex radius min. (in-min): 0.98/25

CODE STRUCTURE GUIDE (Example)			
5236	01	0085	C
Series	*Material	Width	Version

pg. 186-187
pg. 380->386

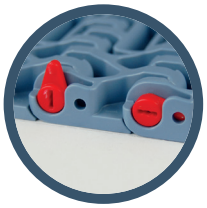

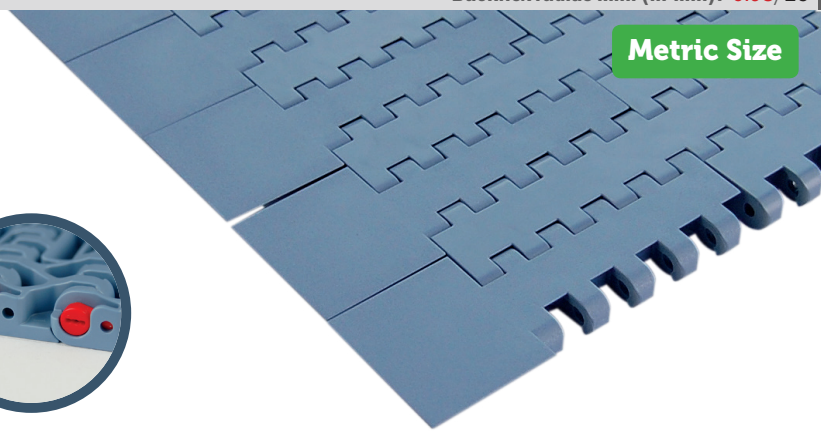

*Material

LFA - Code 01
Low friction Acetal

Max w. load: 2845 LBS/FT /41500 N/m
Weight: 2.56 LBS/FT²/12,5 kg/m²
Temp. range dry: -40÷176°F/-40÷80 °C
Temp. range wet: -40÷149°F/-40÷65 °C
Pin material: PBT white

MX - Code 03
Performance PBT

Max w. load: 2296 LBS/FT /33500 N/m
Weight: 2.46 LBS/FT²/12,0 kg/m²
Temp. range dry: -40÷248°F/-40÷120 °C
Temp. range wet: -40÷140°F/-40÷60 °C
Pin material: POM grey

DKM - Code 16
Aramide Reinforced Acetal

Max w. load: 2845 LBS/FT /41500 N/m
Weight: 2.56 LBS/FT²/12,5 kg/m²
Temp. range dry: -40÷176°F/-40÷80 °C
Temp. range wet: -40÷149°F/-40÷65 °C
Pin material: PBT white

MWX - Code 17
Polyamide Composite

Max w. load: 2845 LBS/FT /41500 N/m
Weight: 2.66 LBS/FT²/13,0 kg/m²
Temp. range dry: -40÷219°F/-40÷104 °C
Temp. range wet: NR
Pin material: PBT white

MP - Code 13
Lubricated Acetal

Max w. load: 2845 LBS/FT /41500 N/m
Weight: 2.56 LBS/FT²/12,5 kg/m²
Temp. range dry: -40÷176°F/-40÷80 °C
Temp. range wet: -40÷149°F/-40÷65 °C
Pin material: PBT white

Version C

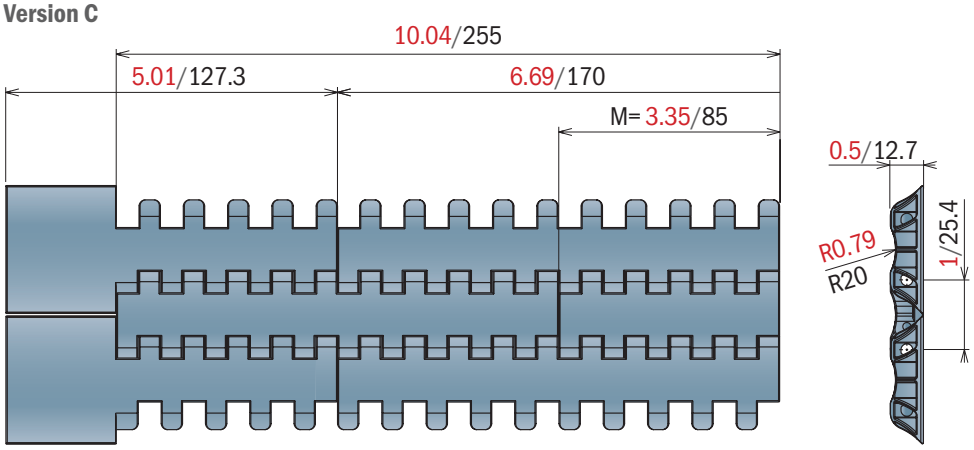

Version CN - Near

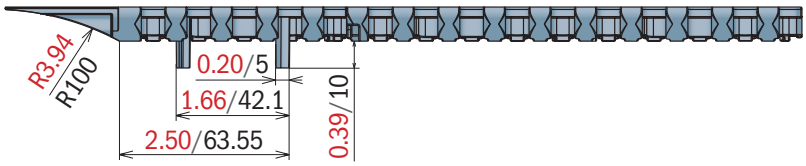

Version CO - Opposite

Version C

Series	Material	Width	Version
5236	*	0085	C

Version CN - Near

Series	Material	Width	Version
5236	*	0170	CN
5236	*	0255	CN

Version CO - Opposite

Series	Material	Width	Version
5236	*	0170	CO
5236	*	0255	CO

551 GT

Modular Belt Series 551 GT, H=12,7 M=85

Backflex radius min. (in-min): 1.18/30

CODE STRUCTURE GUIDE (Example)			
5233	01	0255	B
Series	*Material	Width	Version

pg. 186-187
pg. 380->386

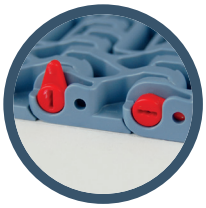

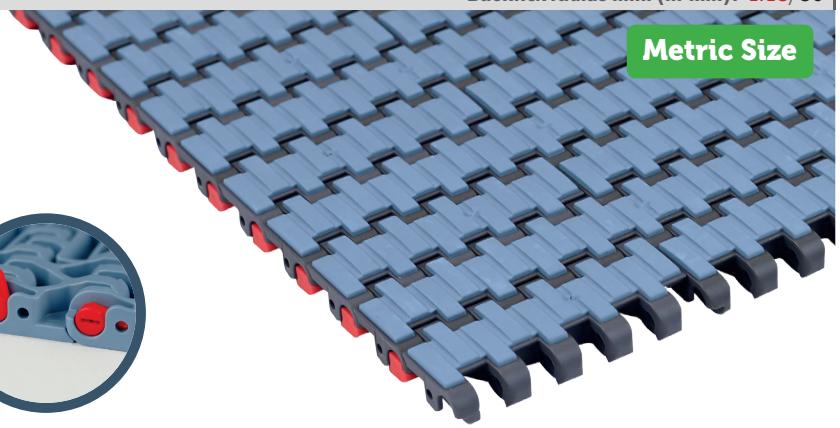

*Material

LFA - Code 01
Low friction Acetal

Max w. load: 2845 LBS/FT /41500 N/m
Weight: 2.76 LBS/FT²/13,5 kg/m²
Temp. range dry: -40÷176°F/-40÷80 °C
Temp. range wet: -40÷149°F/-40÷65 °C
Pin material: PBT white
Hardness: 75 ShA

PP - Code 02
Polypropylene

Max w. load: 1850 LBS/FT /27000 N/m
Weight: 2.25 LBS/FT²/11,0 kg/m²
Temp. range dry: 39,2÷176°F/4÷80 °C
Temp. range wet: 39,2÷149°F/4÷65 °C
Pin material: PP blu
Hardness: 75 ShA

MX - Code 03
Performance PBT

Max w. load: 2295 LBS/FT /33500 N/m
Weight: 2.60 LBS/FT²/12,7 kg/m²
Temp. range dry: -40÷248°F/-40÷120 °C
Temp. range wet: -40÷140°F/-40÷60 °C
Pin material: POM grey
Hardness: 75 ShA

Version A - Standard

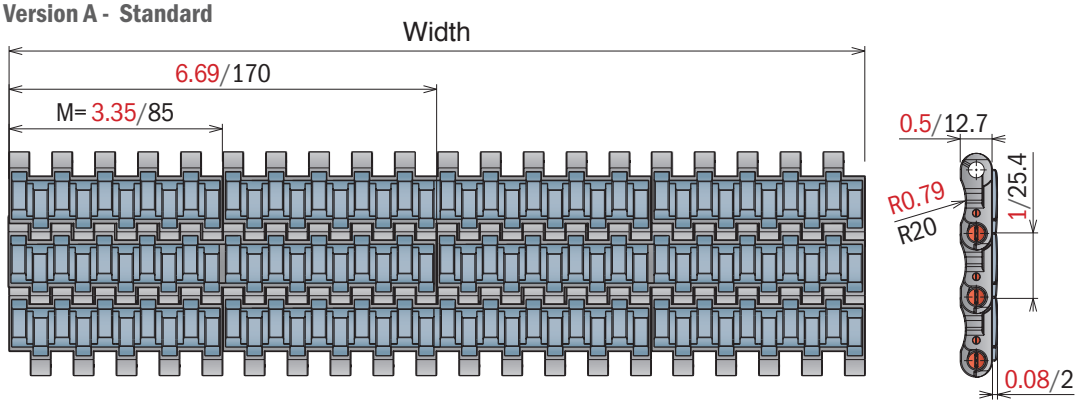

Version B - With 1 Positioner

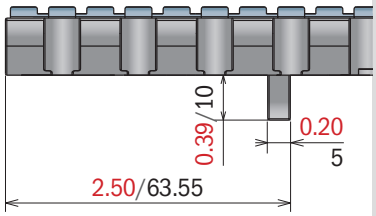

Version C - With 2 Positioner

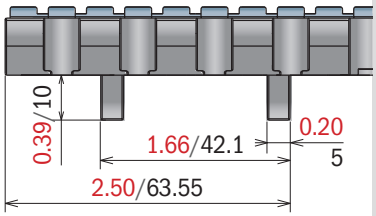

Version A - Standard

Series	Material	Width	Version
5233	*	0085	A
5233	*	0170	A
5233	*	0255	A
5233	*	0340	A
5233	*	0425	A
5233	*	0510	A
5233	*	0595	A
5233	*	0680	A
5233	*	0765	A
5233	*	0850	A
5233	*	0935	A
5233	*	1020	A
5233	*	1105	A
5233	*	1190	A
5233	*	1275	A
5233	*	1360	A
5233	*	1445	A
5233	*	1530	A

Version B - With 1 Positioner

Series	Material	Width	Version
5233	*	0085	B
5233	*	0170	B
5233	*	0255	B
5233	*	0340	B
5233	*	0425	B
5233	*	0510	B
5233	*	0595	B
5233	*	0680	B
5233	*	0765	B
5233	*	0850	B
5233	*	0935	B
5233	*	1020	B
5233	*	1105	B
5233	*	1190	B
5233	*	1275	B
5233	*	1360	B
5233	*	1445	B
5233	*	1530	B

Version C - With 2 Positioners

Series	Material	Width	Version
5233	*	0085	C
5233	*	0170	C
5233	*	0255	C
5233	*	0340	C
5233	*	0425	C
5233	*	0510	C
5233	*	0595	C
5233	*	0680	C
5233	*	0765	C
5233	*	0850	C
5233	*	0935	C
5233	*	1020	C
5233	*	1105	C
5233	*	1190	C
5233	*	1275	C
5233	*	1360	C
5233	*	1445	C
5233	*	1530	C

551 GT *Side indent*

Modular Belt Series 551 GT, H=12,7 M=85

Backflex radius min. (in-min): 1.18/30

CODE STRUCTURE GUIDE (Example)			
5235	02	0765	A
Series	*Material	Width	Version

pg. 186-187

pg. 380->386

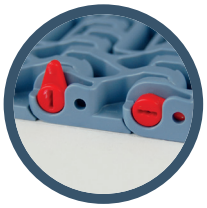

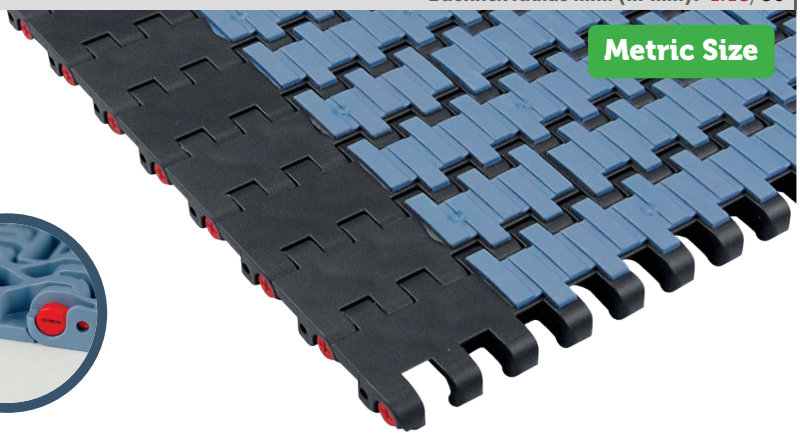

*Material

LFA - Code 01
Low friction Acetal

Max w. load: 2845 LBS/FT /41500 N/m
Weight: 2.70 LBS/FT²/13,5 kg/m²
Temp. range dry: -40÷176°F/-40÷80 °C
Temp. range wet: -40÷149°F/-40÷65 °C
Pin material: PBT white
Hardness: 75 ShA

PP - Code 02
Polypropylene

Max w. load: 1850 LBS/FT /27000 N/m
Weight: 2.21 LBS/FT²/11,0 kg/m²
Temp. range dry: 39,2÷176°F/4÷80 °C
Temp. range wet: 39,2÷149°F/4÷65 °C
Pin material: PP blu
Hardness: 75 ShA

MX - Code 03
Performance PBT

Max w. load: 2295 LBS/FT /33500 N/m
Weight: 2.56 LBS/FT²/12,7 kg/m²
Temp. range dry: -40÷248°F/-40÷120 °C
Temp. range wet: -40÷140°F/-40÷60 °C
Pin material: POM grey
Hardness: 75 ShA

Version A - Standard

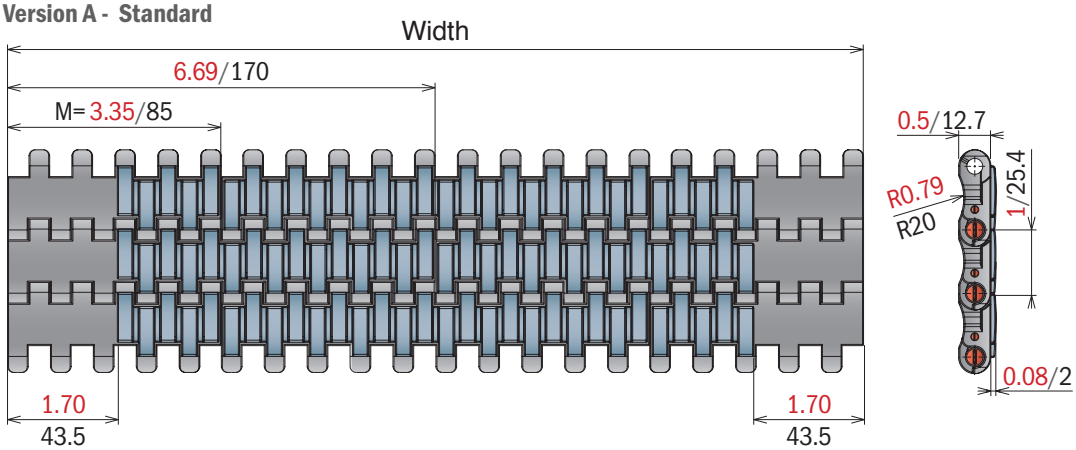

Version B - With 1 Positioner

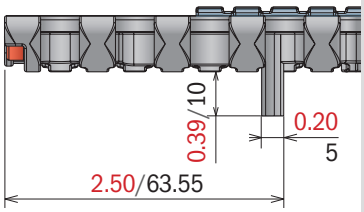

Version C - With 2 Positioner

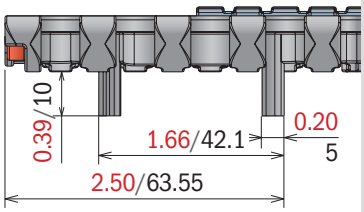

Version A - Standard

Series	Material	Width	Version
5235	*	0255	A
5235	*	0340	A
5235	*	0425	A
5235	*	0510	A
5235	*	0595	A
5235	*	0680	A
5235	*	0765	A
5235	*	0850	A
5235	*	0935	A
5235	*	1020	A
5235	*	1105	A
5235	*	1190	A
5235	*	1275	A
5235	*	1360	A
5235	*	1445	A
5235	*	1530	A

Version B - With 1 Positioner

Series	Material	Width	Version
5235	*	0255	B
5235	*	0340	B
5235	*	0425	B
5235	*	0510	B
5235	*	0595	B
5235	*	0680	B
5235	*	0765	B
5235	*	0850	B
5235	*	0935	B
5235	*	1020	B
5235	*	1105	B
5235	*	1190	B
5235	*	1275	B
5235	*	1360	B
5235	*	1445	B
5235	*	1530	B

Version C - With 2 Positioners

Series	Material	Width	Version
5235	*	0255	C
5235	*	0340	C
5235	*	0425	C
5235	*	0510	C
5235	*	0595	C
5235	*	0680	C
5235	*	0765	C
5235	*	0850	C
5235	*	0935	C
5235	*	1020	C
5235	*	1105	C
5235	*	1190	C
5235	*	1275	C
5235	*	1360	C
5235	*	1445	C
5235	*	1530	C

551 LBP

Modular Belt Series 551 LBP, H=12,7 M=85

Backflex radius min. (in-min): 4.72/120

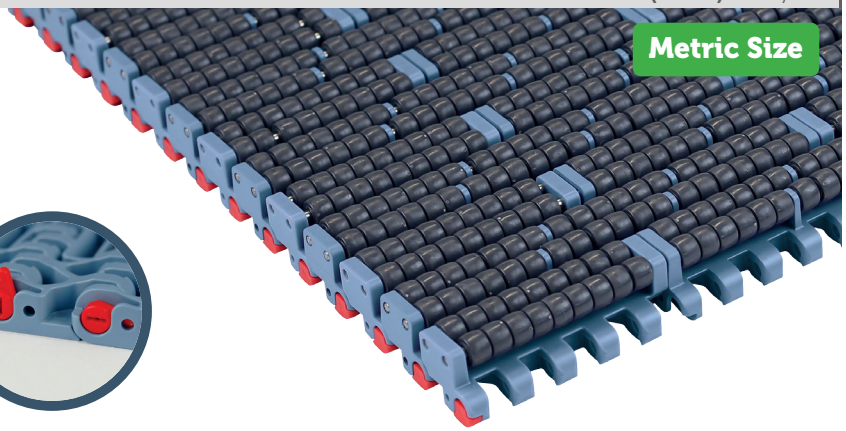

CODE STRUCTURE GUIDE (Example)			
5234	01	0425	A
Series	*Material	Width	Version

pg. 186-187
pg. 380->386

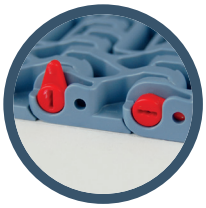

***Material**

LFA - Code 01
Low friction Acetal

Max w. load: 2845 LBS/FT /41500 N/m
Weight: 5.51 LBS/FT²/26,9 kg/m²
Temp. range dry: -40÷176°F/-40÷80 °C
Temp. range wet: -40÷149°F/-40÷65 °C
Pin material: PBT white

Version A - Standard

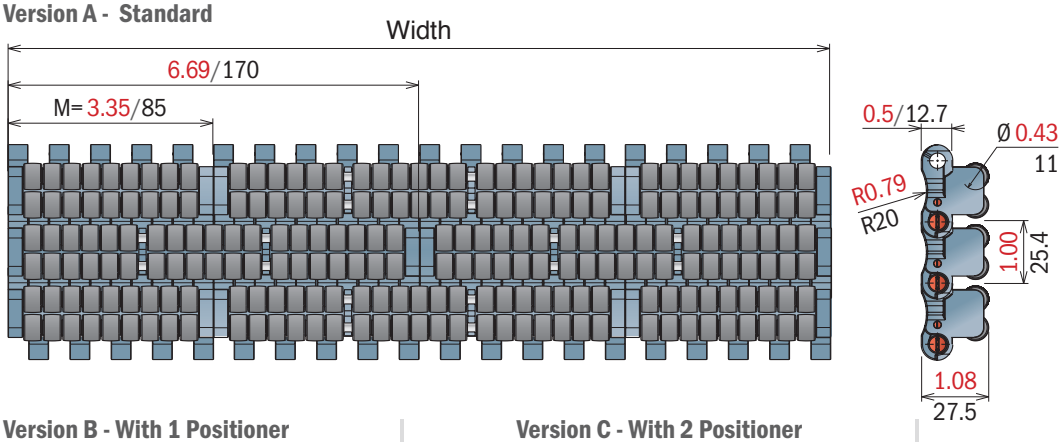

Version B - With 1 Positioner

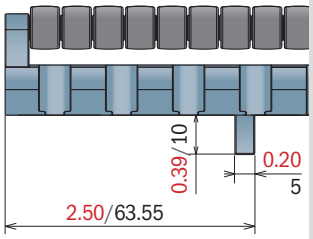

Version C - With 2 Positioner

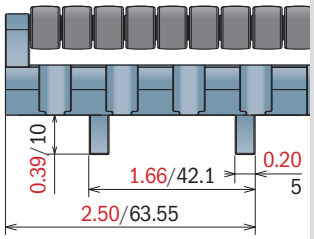

Version A - Standard

Series	Material	Width	Version
5234	*	0085	A
5234	*	0170	A
5234	*	0255	A
5234	*	0340	A
5234	*	0425	A
5234	*	0510	A
5234	*	0595	A
5234	*	0680	A
5234	*	0765	A
5234	*	0850	A
5234	*	0935	A
5234	*	1020	A
5234	*	1105	A
5234	*	1190	A
5234	*	1275	A
5234	*	1360	A
5234	*	1445	A
5234	*	1530	A

Version B - With 1 Positioner

Series	Material	Width	Version
5234	*	0085	B
5234	*	0170	B
5234	*	0255	B
5234	*	0340	B
5234	*	0425	B
5234	*	0510	B
5234	*	0595	B
5234	*	0680	B
5234	*	0765	B
5234	*	0850	B
5234	*	0935	B
5234	*	1020	B
5234	*	1105	B
5234	*	1190	B
5234	*	1275	B
5234	*	1360	B
5234	*	1445	B
5234	*	1530	B

Version C - With 2 Positioners

Series	Material	Width	Version
5234	*	0085	C
5234	*	0170	C
5234	*	0255	C
5234	*	0340	C
5234	*	0425	C
5234	*	0510	C
5234	*	0595	C
5234	*	0680	C
5234	*	0765	C
5234	*	0850	C
5234	*	0935	C
5234	*	1020	C
5234	*	1105	C
5234	*	1190	C
5234	*	1275	C
5234	*	1360	C
5234	*	1445	C
5234	*	1530	C

Discover the New

551 PRO LBP

Energy
25% less energy consumed.
Lower chain weight and easy rotation of the rollers guarantee minimal backline pressure.

Backline pressure
During accumulation phase,
30% less pressure on the product.

Pins connection
Improved pins and roller connection
available pins in Plastic or SS.

Easy clip
Easy and quick installation and use.

Radius in modules
Minimizes chordal action
with transfer plate ø 50 mm.

Safe design
Reduces gaps between the rollers for a more
secure solution for the chain.

The Difference with a standard LBP

GAPS BETWEEN ROLLERS

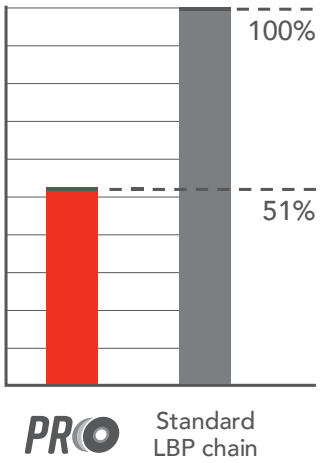

HEADSHAFT TENSION

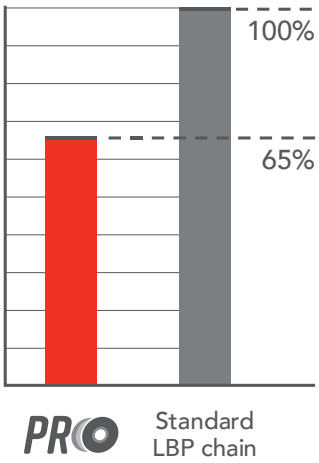

BACKLINE PRESSURE

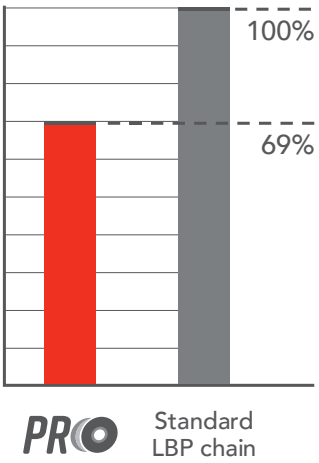

High performance
- -30% Backline pressure
- Improved roller and pins connection
- Smaller head to tail transfers

Best Safety
- Small gaps between rollers, to protect operator
- Permanently fixed roller pins
- Improved low noise

Energy saving
- Low chain weight
- Reduction of friction
- Wearstrips in BluLub. are recommended

551 PRO LBP

Modular Belt Series 551 PRO LBP, H=12,15 M=85

Backflex radius min. (in-min): 4.72/120

CODE STRUCTURE GUIDE (Example)			
5237	01	0425	A
Series	*Material	Width	Version

pg. 186-187
pg. 380->386

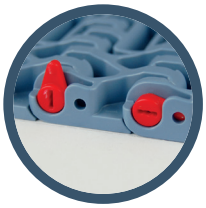

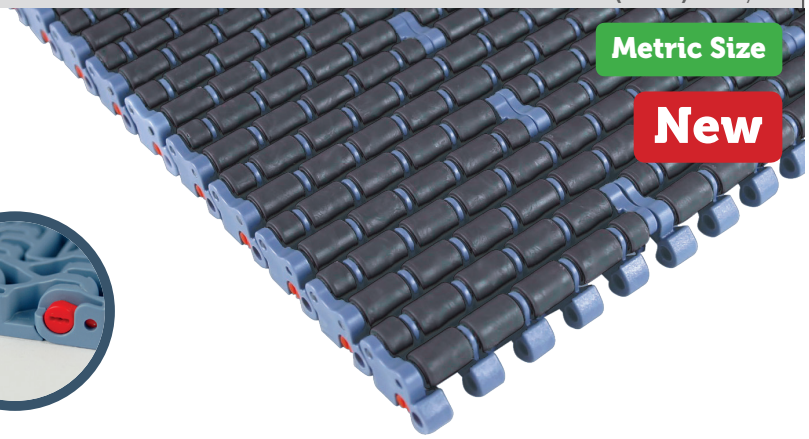

*Material

LFA - Code 01
Low friction Acetal

Max w. load: 2845 LBS/FT /41500 N/m
Weight: 5.51 LBS/FT²/26,9 kg/m²
Temp. range dry: -40÷176°F/-40÷80 °C
Temp. range wet: -40÷149°F/-40÷65 °C
Pin material: PBT white

SS pin
5237
Series

Plastic pin
5238
Series

Patented

Version A - Standard

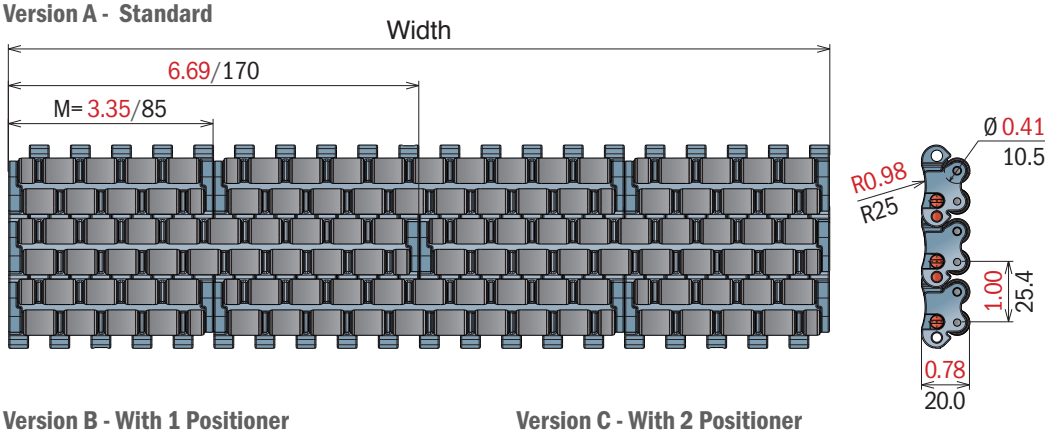

Version B - With 1 Positioner

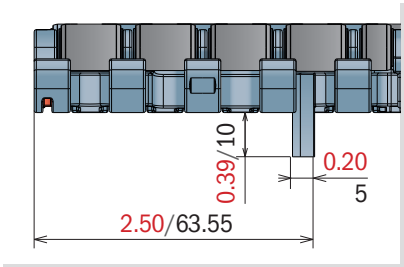

Version C - With 2 Positioner

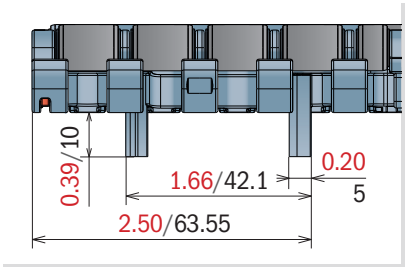

Version A - Standard

Series		Material	Width	Version
SS Pin	Plastic pin			
5237	5238	*	0085	A
5237	5238	*	0170	A
5237	5238	*	0255	A
5237	5238	*	0340	A
5237	5238	*	0425	A
5237	5238	*	0510	A
5237	5238	*	0595	A
5237	5238	*	0680	A
5237	5238	*	0765	A
5237	5238	*	0850	A
5237	5238	*	0935	A
5237	5238	*	1020	A
5237	5238	*	1105	A
5237	5238	*	1190	A
5237	5238	*	1275	A
5237	5238	*	1360	A
5237	5238	*	1445	A
5237	5238	*	1530	A

Version B - With 1 Positioner

Series		Material	Width	Version
SS Pin	Plastic pin			
5237	5238	*	0085	B
5237	5238	*	0170	B
5237	5238	*	0255	B
5237	5238	*	0340	B
5237	5238	*	0425	B
5237	5238	*	0510	B
5237	5238	*	0595	B
5237	5238	*	0680	B
5237	5238	*	0765	B
5237	5238	*	0850	B
5237	5238	*	0935	B
5237	5238	*	1020	B
5237	5238	*	1105	B
5237	5238	*	1190	B
5237	5238	*	1275	B
5237	5238	*	1360	B
5237	5238	*	1445	B
5237	5238	*	1530	B

Version C - With 2 Positioners

Series		Material	Width	Version
SS Pin	Plastic pin			
5237	5238	*	0085	C
5237	5238	*	0170	C
5237	5238	*	0255	C
5237	5238	*	0340	C
5237	5238	*	0425	C
5237	5238	*	0510	C
5237	5238	*	0595	C
5237	5238	*	0680	C
5237	5238	*	0765	C
5237	5238	*	0850	C
5237	5238	*	0935	C
5237	5238	*	1020	C
5237	5238	*	1105	C
5237	5238	*	1190	C
5237	5238	*	1275	C
5237	5238	*	1360	C
5237	5238	*	1445	C
5237	5238	*	1530	C

552

Imperial Size

Pitch 25,4 mm
H= 12,7 mm

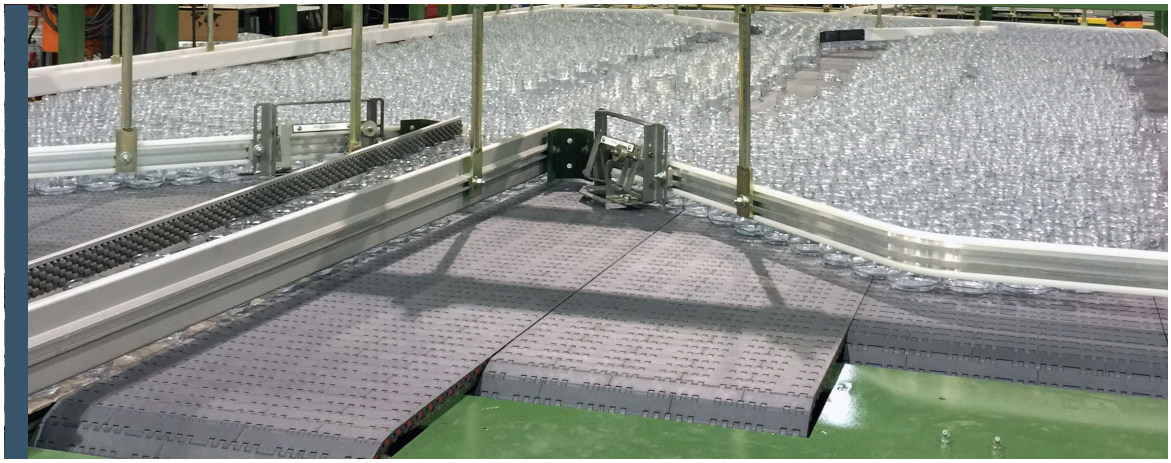

552 FT

552 FT *One track Belt*

552 FTT

552 GT

552 GT *Side indent*

552 PT

552 PT *One track Belt*

552 FT

Modular Belt Series 552 FT, H=12,7 M=3"

Backflex radius min. (in-min): 0.98/25

CODE STRUCTURE GUIDE (Example)			
5341	01	0021	A
Series	*Material	Width	Version

pg. 188-189
pg. 380->386

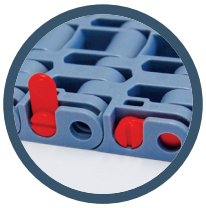

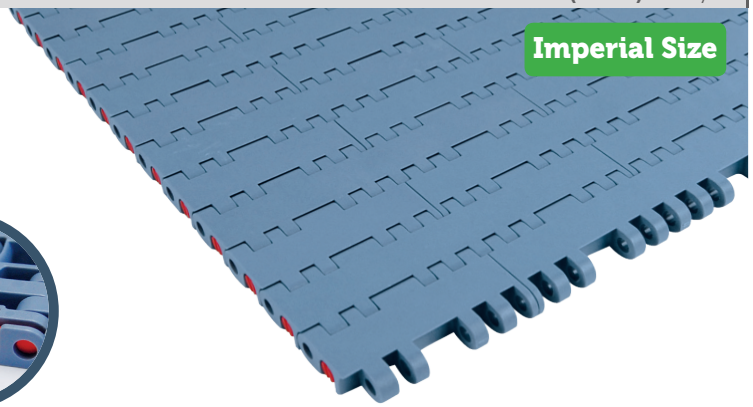

*Material

LFA - Code 01
Low friction Acetal

Max w. load: 2845 LBS/FT /41500 N/m
Weight: 2.76 LBS/FT²/13,5 kg/m²
Temp. range dry: -40÷176°F/-40÷80 °C
Temp. range wet: -40÷149°F/-40÷65 °C
Pin material: PBT white

MX - Code 03
Performance PBT

Max w. load: 2295 LBS/FT /33500 N/m
Weight: 2.76 LBS/FT²/13,0 kg/m²
Temp. range dry: -40÷248°F/-40÷120 °C
Temp. range wet: -40÷140°F/-40÷60 °C
Pin material: POM grey

DKM - Code 16
Aramide Reinforced Acetal

Max w. load: 2845 LBS/FT /41500 N/m
Weight: 2.76 LBS/FT²/13,5 kg/m²
Temp. range dry: -40÷176°F/-40÷80 °C
Temp. range wet: -40÷149°F/-40÷65 °C
Pin material: PBT white

MWX - Code 17
Polyamide Composite

Max w. load: 2845 LBS/FT /41500 N/m
Weight: 2.87 LBS/FT²/14,0 kg/m²
Temp. range dry: -40÷219°F/-40÷104 °C
Temp. range wet: NR
Pin material: PBT white

MP - Code 13
Lubricated Acetal

Max w. load: 2845 LBS/FT /41500 N/m
Weight: 2.76 LBS/FT²/13,5 kg/m²
Temp. range dry: -40÷176°F/-40÷80 °C
Temp. range wet: -40÷149°F/-40÷65 °C
Pin material: PBT white

Version A - Standard

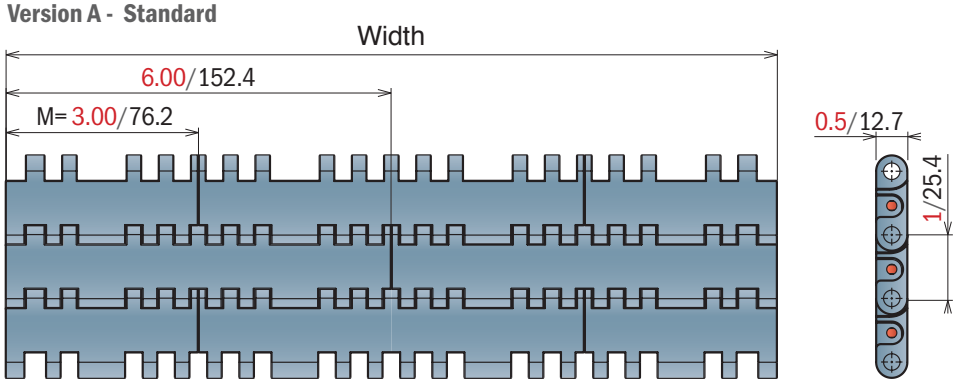

Version A - Standard

Series	Material	Width	Version
5341	*	0009	A
5341	*	0012	A
5341	*	0015	A
5341	*	0018	A
5341	*	0021	A
5341	*	0024	A
5341	*	0027	A
5341	*	0030	A
5341	*	0033	A
5341	*	0036	A
5341	*	0039	A
5341	*	0042	A
5341	*	0045	A
5341	*	0048	A
5341	*	0051	A
5341	*	0054	A

552 FT *One track Belt*

Modular Belt Series 552 FT, H=12,7 M=3"

Backflex radius min. (in-min): 0.98/25

CODE STRUCTURE GUIDE (Example)			
5341	01	0003	A
Series	*Material	Width	Version

pg. 188-189
pg. 380->386

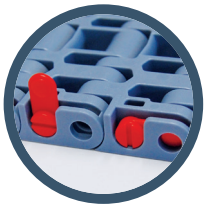

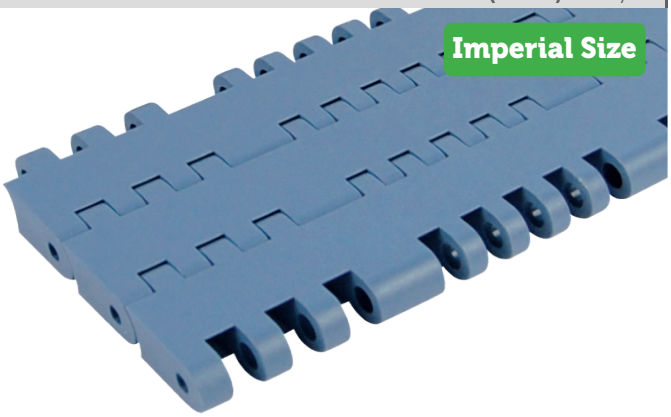

*Material

LFA - Code 01
Low friction Acetal

Max w. load: 2845 LBS/FT / 41500 N/m
Weight: 2.76 LBS/FT² / 13,5 kg/m²
Temp. range dry: -40÷176°F / -40÷80 °C
Temp. range wet: -40÷149°F / -40÷65 °C
Pin material: PBT white

MX - Code 03
Performance PBT

Max w. load: 2295 LBS/FT / 33500 N/m
Weight: 2.76 LBS/FT² / 13,0 kg/m²
Temp. range dry: -40÷248°F / -40÷120 °C
Temp. range wet: -40÷140°F / -40÷60 °C
Pin material: POM grey

DKM - Code 16
Aramide Reinforced Acetal

Max w. load: 2845 LBS/FT / 41500 N/m
Weight: 2.76 LBS/FT² / 13,5 kg/m²
Temp. range dry: -40÷176°F / -40÷80 °C
Temp. range wet: -40÷149°F / -40÷65 °C
Pin material: PBT white

MWX - Code 17
Polyamide Composite

Max w. load: 2845 LBS/FT / 41500 N/m
Weight: 2.87 LBS/FT² / 14,0 kg/m²
Temp. range dry: -40÷219°F / -40÷104 °C
Temp. range wet: NR
Pin material: PBT white

MP - Code 13
Lubricated Acetal

Max w. load: 2845 LBS/FT / 41500 N/m
Weight: 2.76 LBS/FT² / 13,5 kg/m²
Temp. range dry: -40÷176°F / -40÷80 °C
Temp. range wet: -40÷149°F / -40÷65 °C
Pin material: PBT white

Version A - Standard

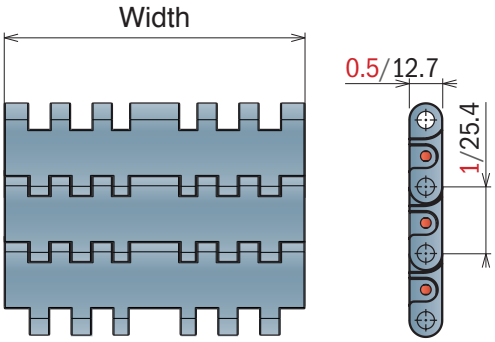

Version C - With 2 Positioner

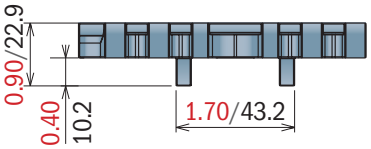

Version A/C
One track belt

Series	Material	Width	Version
5341	*	0003	A
5341	*	0006	A
5341	*	0003	C
5341	*	0006	C

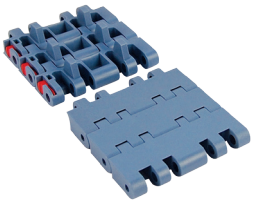

K325 - One track belt

Series	Material	Width	Version
5341	*	9325	A
5341	*	9325	C

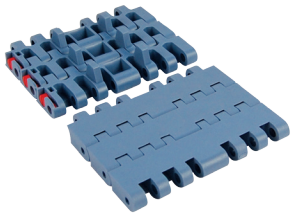

K450 - One track belt

Series	Material	Width	Version
5341	*	9450	A
5341	*	9450	C

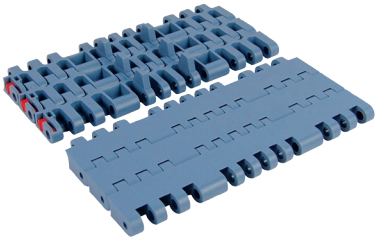

K750 - One track belt

Series	Material	Width	Version
5341	*	9750	A
5341	*	9750	C

552 FTT

Modular Belt Series 552 FTT, H=12,7 M=3"

Backflex radius min. (in-min): 0.98/25

CODE STRUCTURE GUIDE (Example)			
5346	01	9450	C-R
Series	*Material	Width	Version

pg. 188-189
pg. 380->386

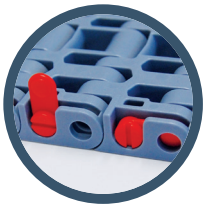

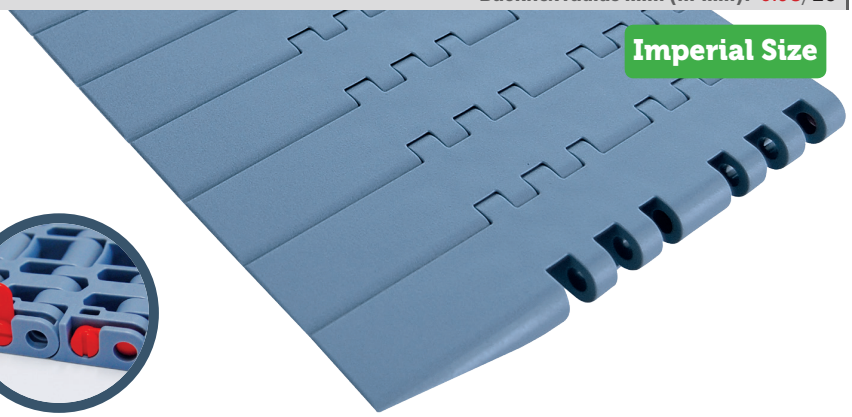

*Material

LFA - Code 01
Low friction Acetal

Max w. load: 2845 LBS/FT / 41500 N/m
Weight: 2.76 LBS/FT² / 13,5 kg/m²
Temp. range dry: -40÷176°F/-40÷80 °C
Temp. range wet: -40÷149°F/-40÷65 °C
Pin material: PBT white

MX - Code 03
Performance PBT

Max w. load: 2295 LBS/FT / 33500 N/m
Weight: 2.76 LBS/FT² / 13,0 kg/m²
Temp. range dry: -40÷248°F/-40÷120 °C
Temp. range wet: -40÷140°F/-40÷60 °C
Pin material: POM grey

DKM - Code 16
Aramide Reinforced Acetal

Max w. load: 2845 LBS/FT / 41500 N/m
Weight: 2.76 LBS/FT² / 13,5 kg/m²
Temp. range dry: -40÷176°F/-40÷80 °C
Temp. range wet: -40÷149°F/-40÷65 °C
Pin material: PBT white

MWX - Code 17
Polyamide Composite

Max w. load: 2845 LBS/FT / 41500 N/m
Weight: 2.87 LBS/FT² / 14,0 kg/m²
Temp. range dry: -40÷219°F/-40÷104 °C
Temp. range wet: NR
Pin material: PBT white

MP - Code 13
Lubricated Acetal

Max w. load: 2845 LBS/FT / 41500 N/m
Weight: 2.76 LBS/FT² / 13,5 kg/m²
Temp. range dry: -40÷176°F/-40÷80 °C
Temp. range wet: -40÷149°F/-40÷65 °C
Pin material: PBT white

552 FTT - DX Version

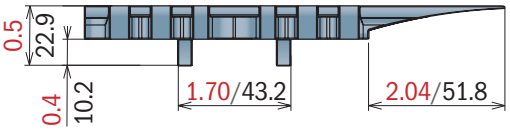

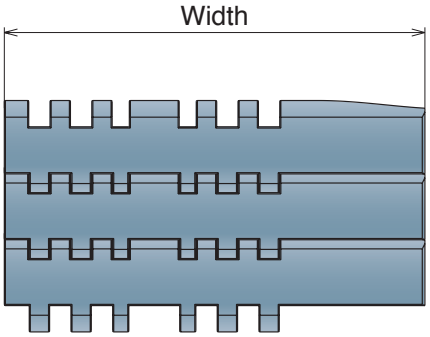

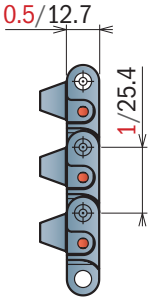

K450 / K750

Series	Material	Width	Version
5346	*	9450	C - R
5346	*	9750	C - R

552 FTT - SX Version

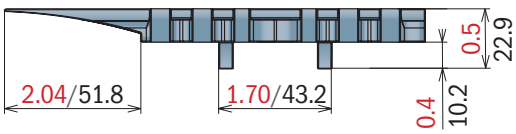

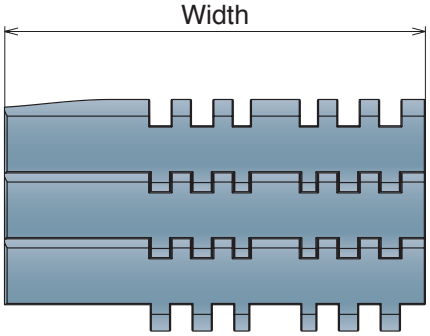

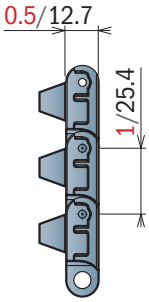

K450 / K750

Series	Material	Width	Version
5346	*	9450	C - L
5346	*	9750	C - L

552 GT

Modular Belt Series 552 GT, H=12,7 M=3”

Backflex radius min. (in-min): 0.98/25

CODE STRUCTURE GUIDE (Example)			
5343	01	0009	A
Series	*Material	Width	Version

pg. 188-189
pg. 380->386

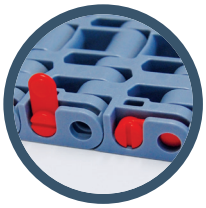

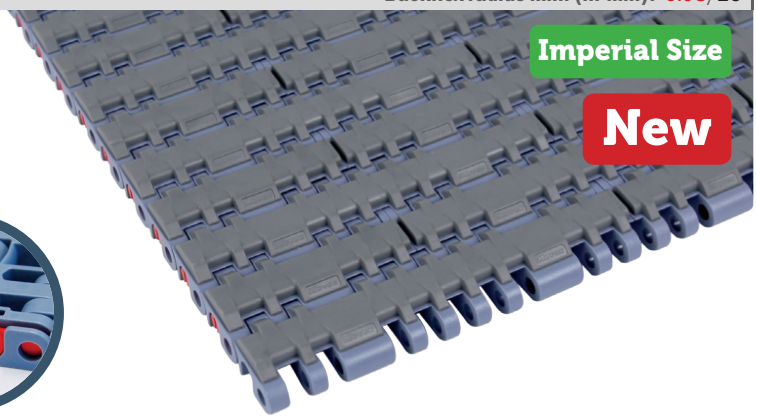

*Material

LFA - Code 01
Low friction Acetal

Max w. load: 2845 LBS/FT /41500 N/m
Weight: 3.17 LBS/FT²/15,5 kg/m²
Temp. range dry: -40÷176°F/-40÷80 °C
Temp. range wet: -40÷149°F/-40÷65 °C
Pin material: PBT white
Hardness: 50 ShA

PP - Code 02
Polypropylene

Max w. load: 1850 LBS/FT /27000 N/m
Weight: 2.76 LBS/FT²/13,5 kg/m²
Temp. range dry: 39,2÷176°F/4÷80 °C
Temp. range wet: 39,2÷149°F/4÷65 °C
Pin material: PP blu
Hardness: 50 ShA

MX - Code 03
Performance PBT

Max w. load: 2295 LBS/FT /33500 N/m
Weight: 3.01 LBS/FT²/14,7 kg/m²
Temp. range dry: -40÷248°F/-40÷120 °C
Temp. range wet: -40÷140°F/-40÷60 °C
Pin material: POM grey
Hardness: 50 ShA

Version A - Standard

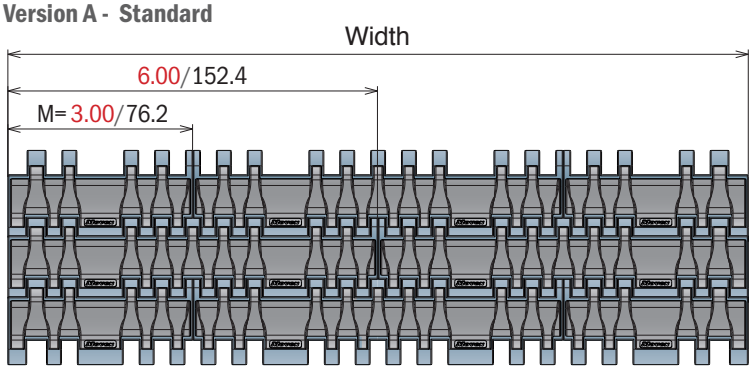

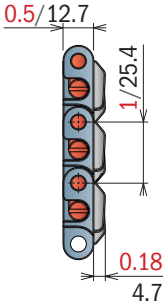

Version A - Standard

Series	Material	Width	Version
5343	*	0009	A
5343	*	0012	A
5343	*	0015	A
5343	*	0018	A
5343	*	0021	A
5343	*	0024	A
5343	*	0027	A
5343	*	0030	A
5343	*	0033	A
5343	*	0036	A
5343	*	0039	A
5343	*	0042	A
5343	*	0045	A
5343	*	0048	A
5343	*	0051	A
5343	*	0054	A

552 GT *Side indent*

Modular Belt Series 552 GT Side indent, H=12,7 M=3”

Backflex radius min. (in-min): 0.98/25

CODE STRUCTURE GUIDE (Example)			
5345	01	0009	A
Series	*Material	Width	Version

pg. 188-189
pg. 380->386

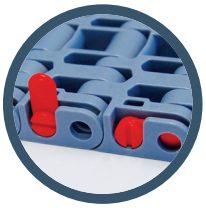

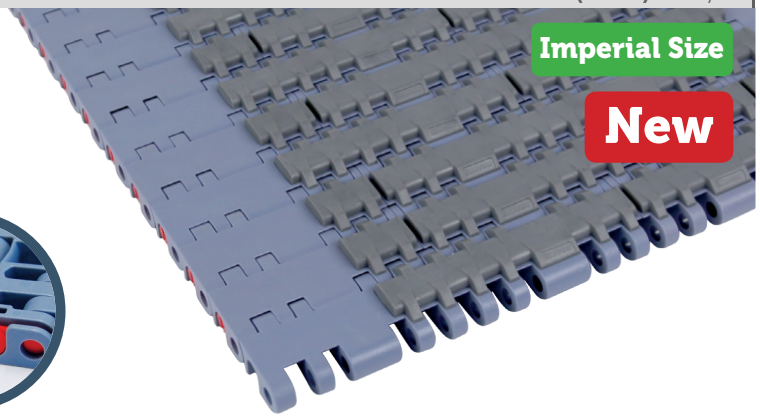

*Material

LFA - Code 01
Low friction Acetal

Max w. load: 2845 LBS/FT /41500 N/m
Weight: 3.17 LBS/FT²/15,5 kg/m²
Temp. range dry: -40÷176°F/-40÷80 °C
Temp. range wet: -40÷149°F/-40÷65 °C
Pin material: PBT white
Hardness: 50 ShA

PP - Code 02
Polypropylene

Max w. load: 1850 LBS/FT /27000 N/m
Weight: 2.76 LBS/FT²/13,5 kg/m²
Temp. range dry: 39,2÷176°F/4÷80 °C
Temp. range wet: 39,2÷149°F/4÷65 °C
Pin material: PP blu
Hardness: 50 ShA

MX - Code 03
Performance PBT

Max w. load: 2295 LBS/FT /33500 N/m
Weight: 3.01 LBS/FT²/14,7 kg/m²
Temp. range dry: -40÷248°F/-40÷120 °C
Temp. range wet: -40÷140°F/-40÷60 °C
Pin material: POM grey
Hardness: 50 ShA

Version A - Standard

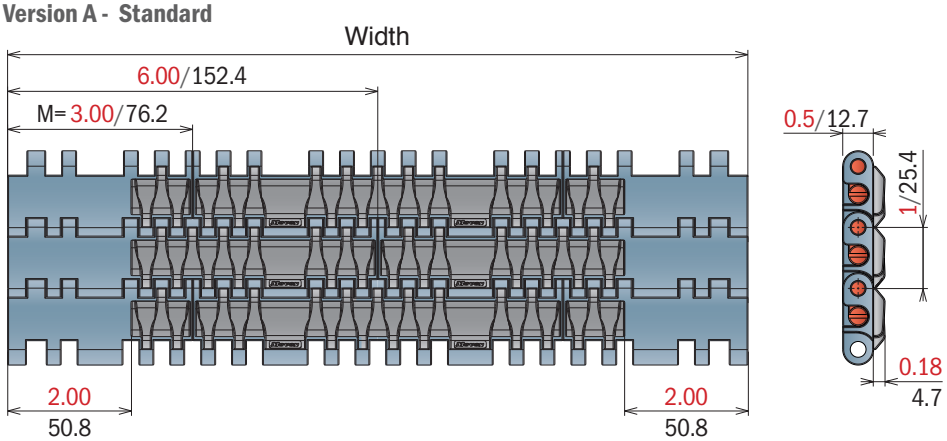

Version A - Standard

Series	Material	Width	Version
5345	*	0009	A
5345	*	0012	A
5345	*	0015	A
5345	*	0018	A
5345	*	0021	A
5345	*	0024	A
5345	*	0027	A
5345	*	0030	A
5345	*	0033	A
5345	*	0036	A
5345	*	0039	A
5345	*	0042	A
5345	*	0045	A
5345	*	0048	A
5345	*	0051	A
5345	*	0054	A

552 PT

Modular Belt Series 552 PT, H=12,7 M=3"

Backflex radius min. (in-min): 0.98/25

CODE STRUCTURE GUIDE (Example)			
5342	01	0009	A
Series	*Material	Width	Version

pg. 188-189
pg. 380->386

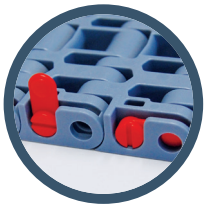

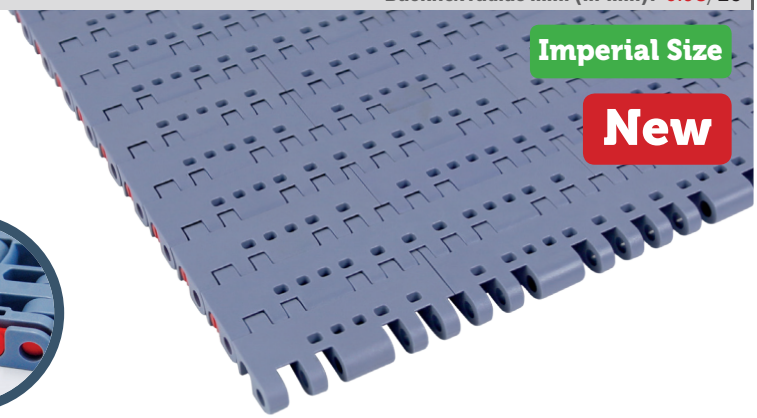

*Material

LFA - Code 01
Low friction Acetal

Max w. load: 2845 LBS/FT / 41500 N/m
Weight: 2.70 LBS/FT² / 13,2 kg/m²
Temp. range dry: -40÷176°F / -40÷80 °C
Temp. range wet: -40÷149°F / -40÷65 °C
Pin material: PBT white

MX - Code 03
Performance PBT

Max w. load: 2295 LBS/FT / 33500 N/m
Weight: 2.60 LBS/FT² / 12,7 kg/m²
Temp. range dry: -40÷248°F / -40÷120 °C
Temp. range wet: -40÷140°F / -40÷60 °C
Pin material: POM grey

DKM - Code 16
Aramide Reinforced Acetal

Max w. load: 2845 LBS/FT / 41500 N/m
Weight: 2.70 LBS/FT² / 13,2 kg/m²
Temp. range dry: -40÷176°F / -40÷80 °C
Temp. range wet: -40÷149°F / -40÷65 °C
Pin material: PBT white

MWX - Code 17
Polyamide Composite

Max w. load: 2845 LBS/FT / 41500 N/m
Weight: 2.80 LBS/FT² / 13,7 kg/m²
Temp. range dry: -40÷219°F / -40÷104 °C
Temp. range wet: NR
Pin material: PBT white

MP - Code 13
Lubricated Acetal

Max w. load: 2845 LBS/FT / 41500 N/m
Weight: 2.70 LBS/FT² / 13,2 kg/m²
Temp. range dry: -40÷176°F / -40÷80 °C
Temp. range wet: -40÷149°F / -40÷65 °C
Pin material: PBT white

Version A - Standard

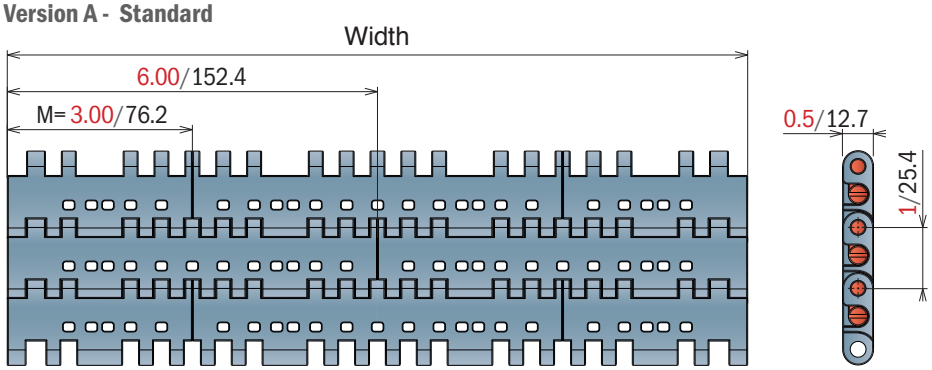

Version A - Standard

Series	Material	Width	Version
5342	*	0009	A
5342	*	0012	A
5342	*	0015	A
5342	*	0018	A
5342	*	0021	A
5342	*	0024	A
5342	*	0027	A
5342	*	0030	A
5342	*	0033	A
5342	*	0036	A
5342	*	0039	A
5342	*	0042	A
5342	*	0045	A
5342	*	0048	A
5342	*	0051	A
5342	*	0054	A

552 PT *One track Belt*

Modular Belt Series 552 PT, H=12,7 M=3"

Backflex radius min. (in-min): 0.98/25

CODE STRUCTURE GUIDE (Example)			
5342	01	0003	A
Series	*Material	Width	Version

pg. 188-189
pg. 380->386

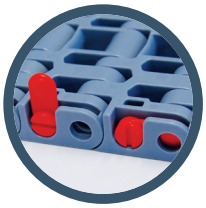

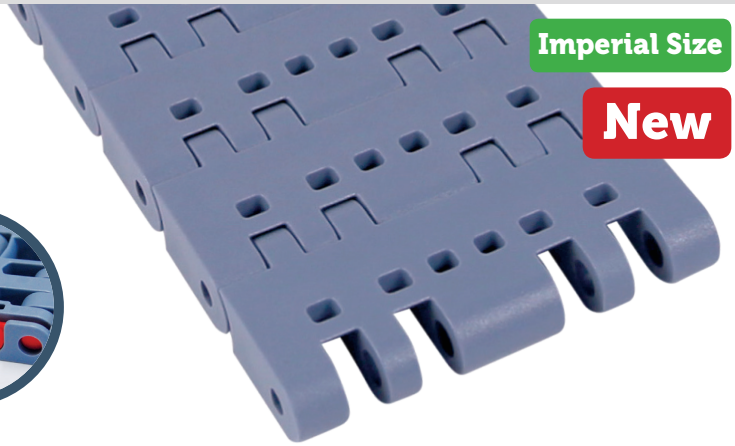

Imperial Size

New

*Material

LFA - Code 01
Low friction Acetal

Max w. load: 2845 LBS/FT / 41500 N/m
Weight: 2.70 LBS/FT² / 13,2 kg/m²
Temp. range dry: -40÷176°F/-40÷80 °C
Temp. range wet: -40÷149°F/-40÷65 °C
Pin material: PBT white

MX - Code 03
Performance PBT

Max w. load: 2295 LBS/FT / 33500 N/m
Weight: 2.60 LBS/FT² / 12,7 kg/m²
Temp. range dry: -40÷248°F/-40÷120 °C
Temp. range wet: -40÷140°F/-40÷60 °C
Pin material: POM grey

DKM - Code 16
Aramide Reinforced Acetal

Max w. load: 2845 LBS/FT / 41500 N/m
Weight: 2.70 LBS/FT² / 13,2 kg/m²
Temp. range dry: -40÷176°F/-40÷80 °C
Temp. range wet: -40÷149°F/-40÷65 °C
Pin material: PBT white

MWX - Code 17
Polyamide Composite

Max w. load: 2845 LBS/FT / 41500 N/m
Weight: 2.80 LBS/FT² / 13,7 kg/m²
Temp. range dry: -40÷219°F/-40÷104 °C
Temp. range wet: NR
Pin material: PBT white

MP - Code 13
Lubricated Acetal

Max w. load: 2845 LBS/FT / 41500 N/m
Weight: 2.70 LBS/FT² / 13,2 kg/m²
Temp. range dry: -40÷176°F/-40÷80 °C
Temp. range wet: -40÷149°F/-40÷65 °C
Pin material: PBT white

Version A - Standard

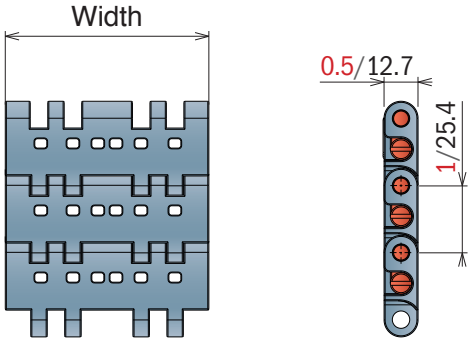

Version C - With 2 Positioner

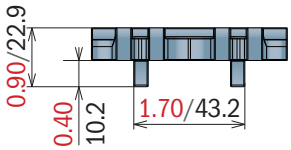

Version A - Standard

Series	Material	Width	Version
5342	*	0003	A
5342	*	0006	A

Version C - With 2 Positioners

Series	Material	Width	Version
5342	*	0003	C
5342	*	0006	C

556

Imperial Size

Pitch 25,4 mm
H= 12,7 mm

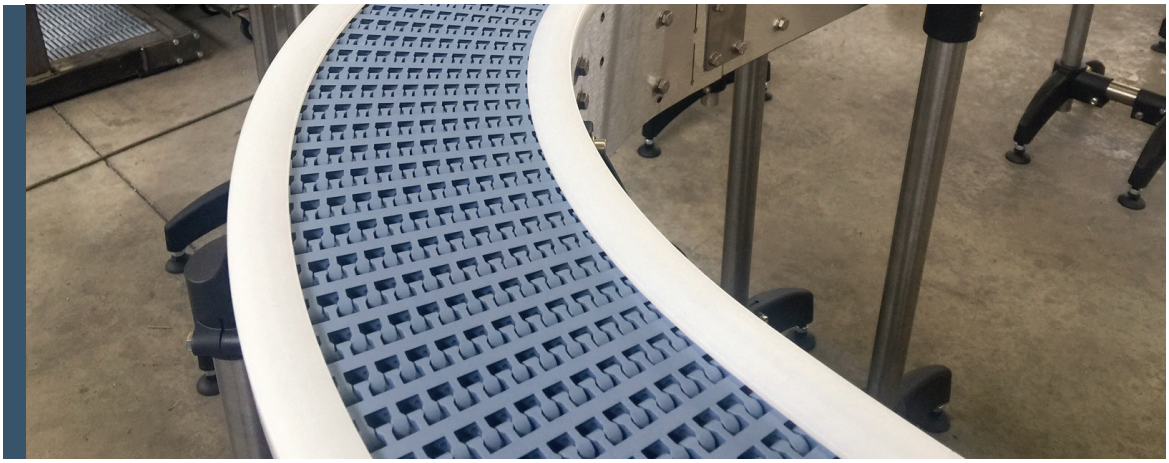

556 FT

556 GT

556 FT

Side Flex Modular Belt Series 556, H=12,7 M=3”

Backflex radius min. (in-min): 0.98/25

CODE STRUCTURE GUIDE (Example)			
5431	01	0006	C
Series	*Material	Width	Version

pg. 192
pg. 380->386

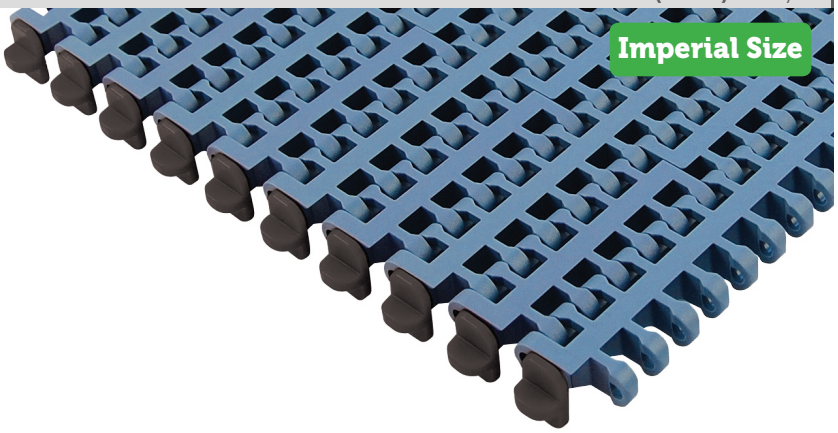

*Material

LFA - Code 01
Low friction Acetal

Max w. load:
Straight 2056 LBS/FT /30000 N/m
Curve 450 LBS/FT /2000 N
Weight: 1.54 LBS/FT²/7,5 kg/m²
Temp. range dry: -40÷176°F/-40÷80 °C
Temp. range wet: -40÷149°F/-40÷65 °C
Pin material: PBT white

MX - Code 03
Performance PBT

Max w. load:
Straight 1645 LBS/FT /24000 N/m
Curve 337 LBS/FT /1500 N
Weight: 1.47 LBS/FT²/7,2 kg/m²
Temp. range dry: -40÷176°F/-40÷120 °C
Temp. range wet: -40÷149°F/-40÷60 °C
Pin material: POM grey

DKM - Code 16
Aramide Reinforced Acetal

Max w. load:
Straight 2056 LBS/FT /30000 N/m
Curve 450 LBS/FT /2000 N
Weight: 1.54 LBS/FT²/7,5 kg/m²
Temp. range dry: -40÷176°F/-40÷80 °C
Temp. range wet: -40÷149°F/-40÷65 °C
Pin material: PBT white

MWX - Code 17
Polyamide Composite

Max w. load:
Straight 2056 LBS/FT /30000 N/m
Curve 450 LBS/FT /2000 N
Weight: 1.54 LBS/FT²/7,5 kg/m²
Temp. range dry: -40÷219°F/-40÷104 °C
Temp. range wet: NR
Pin material: PBT white

MP - Code 13
Lubricated Acetal

Max w. load:
Straight 2056 LBS/FT /30000 N/m
Curve 450 LBS/FT /2000 N
Weight: 1.54 LBS/FT²/7,5 kg/m²
Temp. range dry: -40÷176°F/-40÷80 °C
Temp. range wet: -40÷149°F/-40÷65 °C
Pin material: PBT white

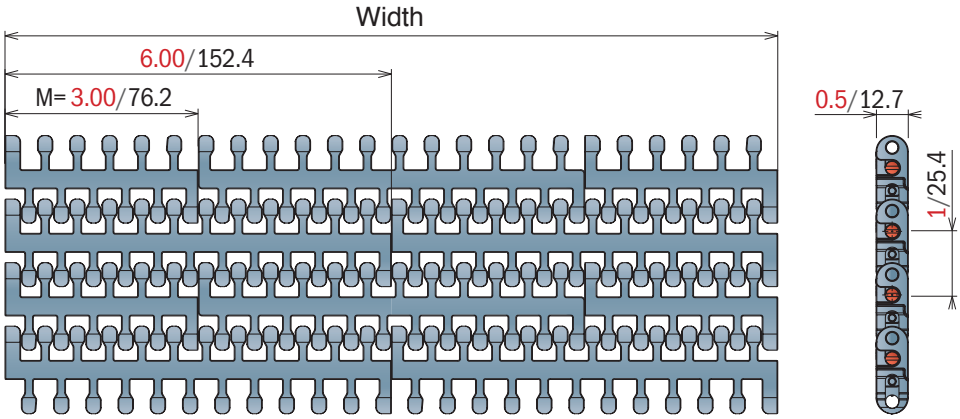

STANDARD

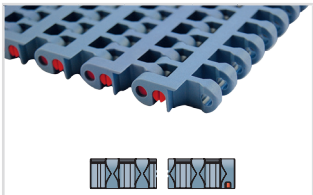

Series	Material	Width	Version	min radius
5431	*	0009	A	435
5431	*	0012	A	580
5431	*	0015	A	725
5431	*	0018	A	890
5431	*	0021	A	1040
5431	*	0024	A	1250

ONE TRACK BELT

Series	Material	Width	Version	min radius
5431	*	0003	A	145
5431	*	0006	A	290

TAB

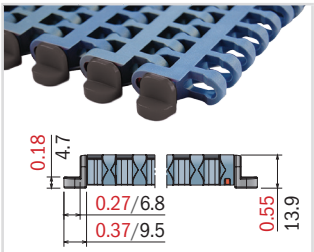

Series	Material	Width	Version	min radius
5431	*	0006	B	290
5431	*	0009	B	435
5431	*	0012	B	580
5431	*	0015	B	725
5431	*	0018	B	890
5431	*	0021	B	1040
5431	*	0024	B	1250

ONE TRACK BELT

Series	Material	Width	Version	min radius
5431	*	0003	B	145
5431	*	0006	B	290

TAB/POSITIONER

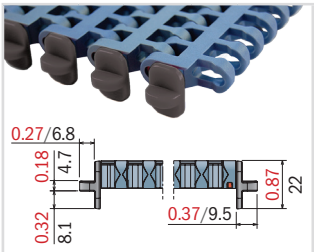

Series	Material	Width	Version	min radius
5431	*	0006	C	290
5431	*	0009	C	435
5431	*	0012	C	580
5431	*	0015	C	725
5431	*	0018	C	890
5431	*	0021	C	1040
5431	*	0024	C	1250

ONE TRACK BELT

Series	Material	Width	Version	min radius
5431	*	0003	C	145
5431	*	0006	C	290

556 GT

Side Flex Modular Belt Series 556 GT, H=12,7 M=3"

Backflex radius min. (in-min): 0.98/25

CODE STRUCTURE GUIDE (Example)			
5433	01	0018	B
Series	*Material	Width	Version

pg. 192
pg. 380->386

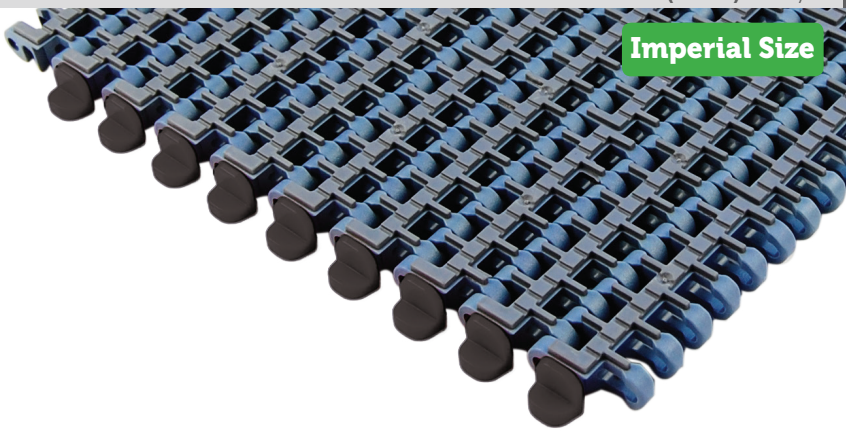

*Material

LFA - Code 01
Low friction Acetal

Max w. load:
Straight 2056 LBS/FT /30000 N/m
Curve 450 LBS/2000 N
Weight: 1,58 LBS/FT²/7,7 kg/m²
Temp. range dry: -40÷176°F/-40÷80 °C
Temp. range wet: -40÷149°F/-40÷65 °C
Pin material: PBT white
Hardness of Grip top Rubber: 75 ShA

PPB - Code 24
Polypropylene
Standard rubber: 50 ShA Code: -S

Max w. load:
Straight 1375 LBS/FT /19500 N/m
Curve 292 LBS /1300 N
Weight: 1,23 LBS/FT²/6,0 kg/m²
Temp. range dry: -00÷000°F/-4÷65 °C
Temp. range wet: -00÷000°F/-4÷65 °C
Pin material: PP blu
Hardness of Grip top Rubber: 50 ShA

MX - Code 03
Performance PBT

Max w. load:
Straight 1975 LBS/FT /28800 N/m
Curve 427 LBS/FT /1900 N
Weight: 1,60 LBS/FT²/7,8 kg/m²
Temp. range dry: -40÷248°F/-40÷120 °C
Temp. range wet: -40÷140°F/-40÷60 °C
Pin material: POM grey
Hardness of Grip top Rubber: 75 ShA

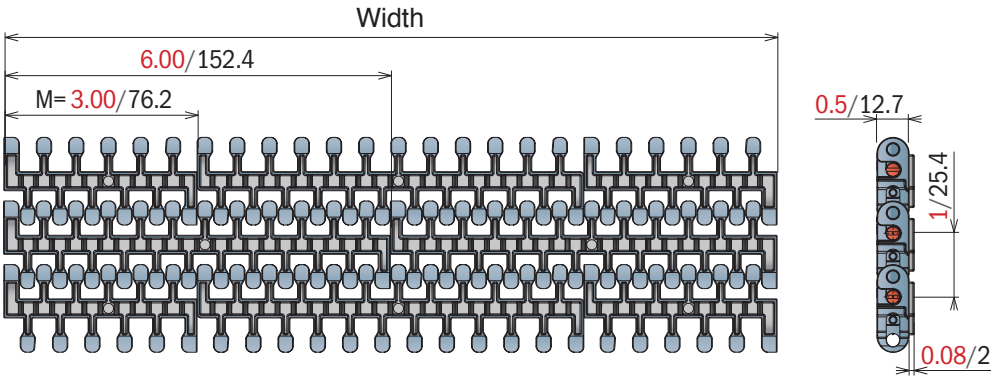

STANDARD

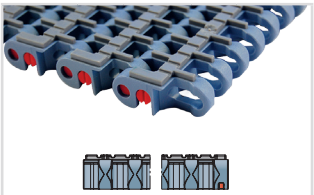

Series	Material	Width	Version	min radius
5433	*	0009	A	435
5433	*	0012	A	580
5433	*	0015	A	725
5433	*	0018	A	890
5433	*	0021	A	1040
5433	*	0024	A	1250

ONE TRACK BELT

Series	Material	Width	Version	min radius
5433	*	0003	A	145
5433	*	0006	A	290

TAB

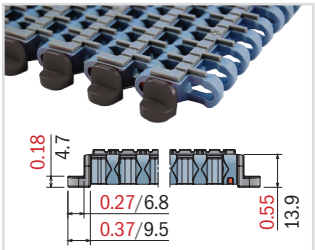

Series	Material	Width	Version	min radius
5433	*	0006	B	290
5433	*	0009	B	435
5433	*	0012	B	580
5433	*	0015	B	725
5433	*	0018	B	890
5433	*	0021	B	1040
5433	*	0024	B	1250

ONE TRACK BELT

Series	Material	Width	Version	min radius
5433	*	0003	B	145
5433	*	0006	B	290

TAB/POSITIONER

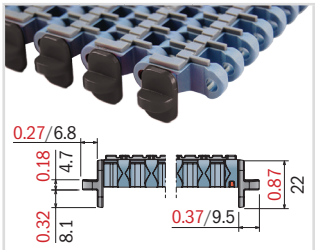

Series	Material	Width	Version	min radius
5433	*	0006	C	290
5433	*	0009	C	435
5433	*	0012	C	580
5433	*	0015	C	725
5433	*	0018	C	890
5433	*	0021	C	1040
5433	*	0024	C	1250

ONE TRACK BELT

Series	Material	Width	Version	min radius
5433	*	0003	C	145
5433	*	0006	C	290

600

Metric Size

Pitch 31,75 mm
H= 12,7 mm

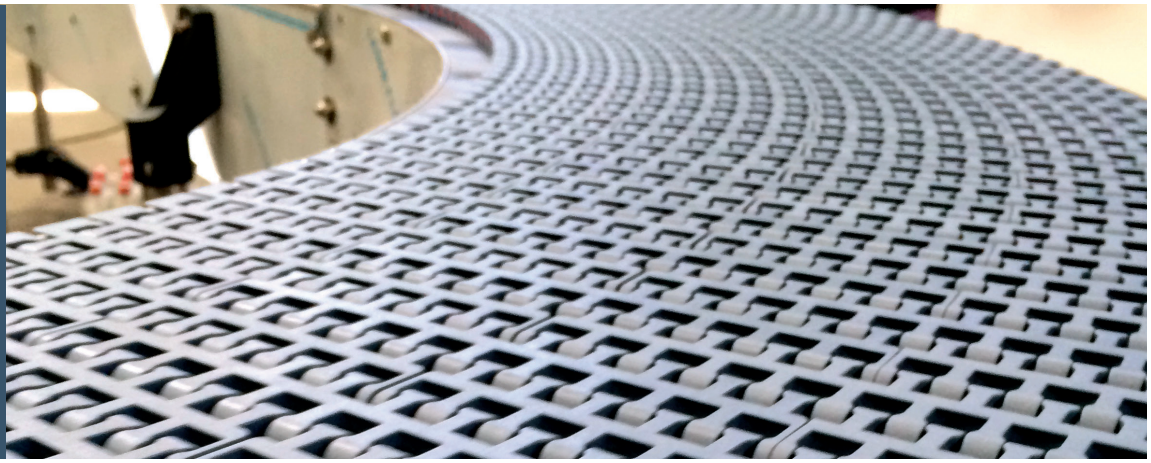

- 600 *Standard*
- 600 *Heavy duty*
- 600 *Heavy duty with Bearing*
- 600 *Small radius*
- 600 *Heavy duty /Small radius*
- 600 *Heavy duty /Small radius with Bearing*
- 600 *with Pusher*
- 1047 *Heavy duty guide*

600 Standard

Side Flex Modular Belt Series 600, H=12,7 M=85

Backflex radius min. (in-min): 0.98/25

Metric Size

CODE STRUCTURE GUIDE (Example)			
5421	03	0595	A
Series	*Material	Width	Version

pg. 193
pg. 380->386

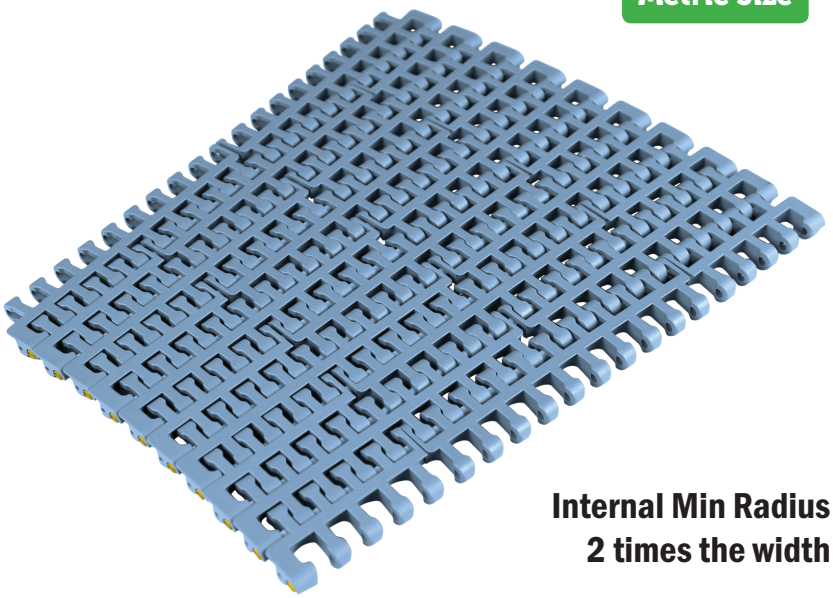

Internal Min Radius
2 times the width

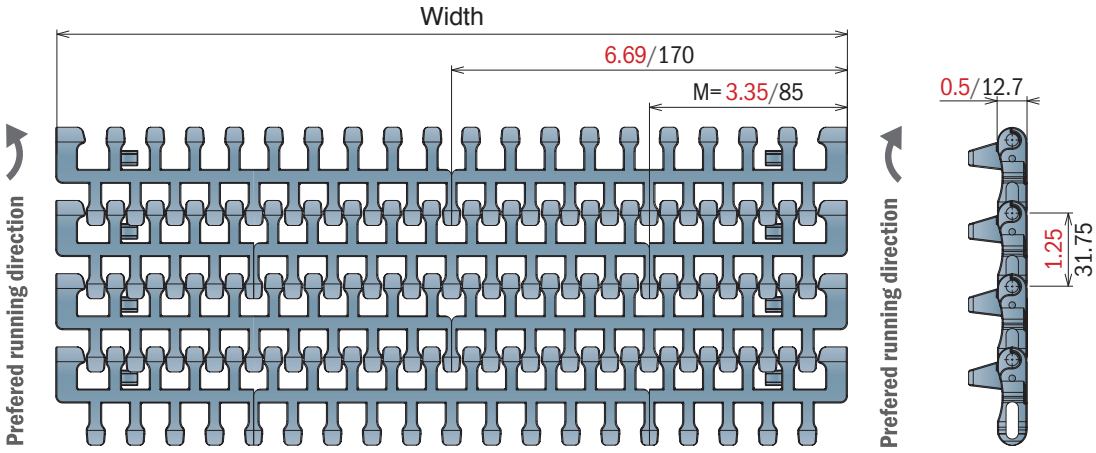

*Material

LFA - Code 01
Low friction Acetal

Max w. load:
Straight 2056 LBS/FT /30000 N/m
Curve 562 LBS/FT /2500 N
Weight: 1,58 LBS/FT²/7,7 kg/m²
Temp. r. dry: -40÷176°F/-40÷80°C
Temp. r. wet: -40÷149°F/-40÷65°C
Pin material: PBT white

MX - Code 03
Performance PBT

Max w. load:
Straight 1645 LBS/FT /24000 N/m
Curve 450 LBS/FT /2000 N
Weight: 1,54 LBS/FT²/7,5 kg/m²
Temp. r. dry: -40÷248°F/-40÷120°C
Temp. r. wet: -40÷140°F/-40÷60°C
Pin material: POM grey

DKM - Code 16
Aramide Reinforced Acetal

Max w. load:
Straight 2056 LBS/FT /30000 N/m
Curve 562 LBS/FT /2500 N
Weight: 1,58 LBS/FT²/7,7 kg/m²
Temp. r. dry: -40÷176°F/-40÷80°C
Temp. r. wet: -40÷149°F/-40÷65°C
Pin material: PBT white

MWX - Code 17
Polyamide Composite

Max w. load:
Straight 2056 LBS/FT /30000 N/m
Curve 562 LBS/FT /2500 N
Weight: 1,64 LBS/FT²/8,0 kg/m²
Temp. r. dry: -40÷219°F/-40÷104°C
Temp. r. wet: NR
Pin material: PBT white

MP - Code 13
Lubricated Acetal

Max w. load:
Straight 2056 LBS/FT /30000 N/m
Curve 562 LBS/FT /2500 N
Weight: 1,58 LBS/FT²/7,7 kg/m²
Temp. r. dry: -40÷176°F/-40÷80°C
Temp. r. wet: -40÷149°F/-40÷65°C
Pin material: PBT white

STANDARD

Series	Material	Width	Version	min radius
5421	*	0255	A	510
5421	*	0340	A	680
5421	*	0425	A	850
5421	*	0510	A	1020
5421	*	0595	A	1190
5421	*	0680	A	1360
5421	*	0765	A	1530
5421	*	0850	A	1700

TAB

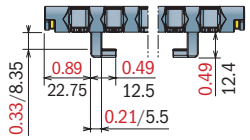

Series	Material	Width	Version	min radius
5421	*	0255	B	510
5421	*	0340	B	680
5421	*	0425	B	850
5421	*	0510	B	1020
5421	*	0595	B	1190
5421	*	0680	B	1360
5421	*	0765	B	1530
5421	*	0850	B	1700

REVERSE TAB

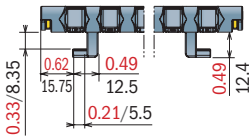

Series	Material	Width	Version	min radius
5421	*	0255	C	510
5421	*	0340	C	680
5421	*	0425	C	850
5421	*	0510	C	1020
5421	*	0595	C	1190
5421	*	0680	C	1360
5421	*	0765	C	1530
5421	*	0850	C	1700

TAB REVERSE TAB

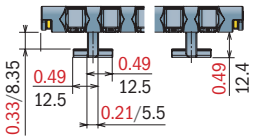

Series	Material	Width	Version	min radius
5421	*	0255	D	510
5421	*	0340	D	680
5421	*	0425	D	850
5421	*	0510	D	1020
5421	*	0595	D	1190
5421	*	0680	D	1360
5421	*	0765	D	1530
5421	*	0850	D	1700

600 Heavy duty

Side Flex Modular Belt Series 600, H=12,7 M=85

Backflex radius min. (in-min): 0.98/25

Metric Size

CODE STRUCTURE GUIDE (Example)			
5422	03	0340	E
Series	*Material	Width	Version

pg. 193
pg. 380->386

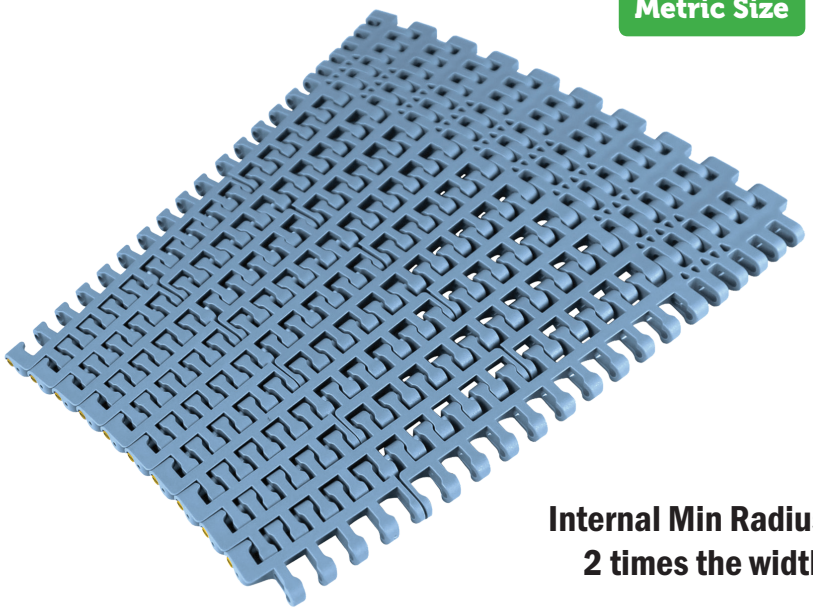

Internal Min Radius
2 times the width

*Material

LFA - Code 01
Low friction Acetal

Max w. load:
Straight 2056 LBS/FT /30000 N/m
Curve 786 LBS /3500 N
Weight: 1,58 LBS/FT²/8,3 kg/m²
Temp. r. dry: -40÷176°F/-40÷80°C
Temp. r. wet: -40÷149°F/-40÷65°C
Pin material: PBT white

MX - Code 03
Performance PBT

Max w. load:
Straight 1645 LBS/FT /24000 N/m
Curve 675 LBS /3000 N
Weight: 1,54 LBS/FT²/8,0 kg/m²
Temp. r. dry: -40÷248°F/-40÷120°C
Temp. r. wet: -40÷140°F/-40÷60°C
Pin material: POM grey

DKM - Code 16
Aramide Reinforced Acetal

Max w. load:
Straight 2056 LBS/FT /30000 N/m
Curve 786 LBS /3500 N
Weight: 1,58 LBS/FT²/8,3 kg/m²
Temp. r. dry: -40÷176°F/-40÷80°C
Temp. r. wet: -40÷149°F/-40÷65°C
Pin material: PBT white

MWX - Code 17
Polyamide Composite

Max w. load:
Straight 2056 LBS/FT /30000 N/m
Curve 786 LBS /3500 N
Weight: 1,64 LBS/FT²/8,6 kg/m²
Temp. r. dry: -40÷219°F/-40÷104°C
Temp. r. wet: NR
Pin material: PBT white

MP - Code 13
Lubricated Acetal

Max w. load:
Straight 2056 LBS/FT /30000 N/m
Curve 786 LBS/3500 N
Weight: 1,58 LBS/FT²/8,3 kg/m²
Temp. r. dry: -40÷176°F/-40÷80°C
Temp. r. wet: -40÷149°F/-40÷65°C
Pin material: PBT white

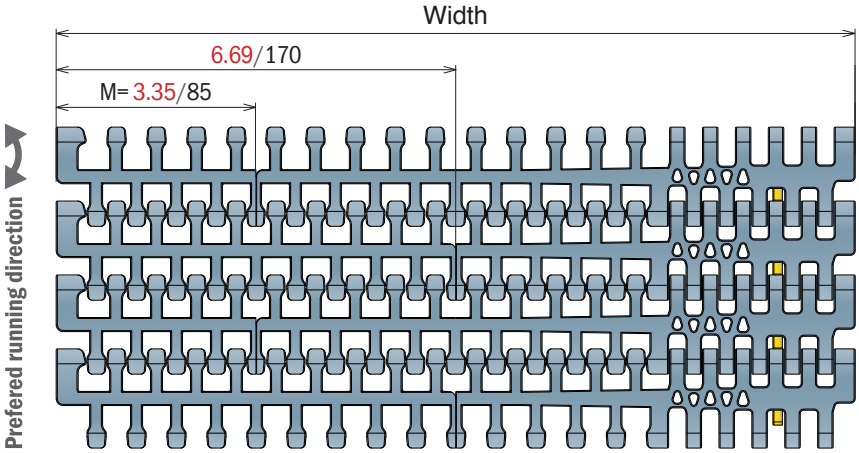

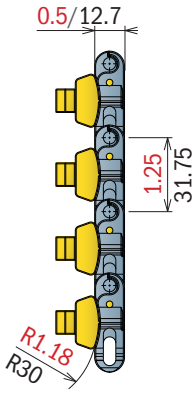

STANDARD

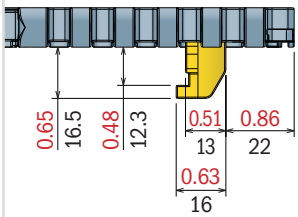

Series	Material	Width	Version	min radius
5422	*	0340	E	680
5422	*	0425	E	850
5422	*	0510	E	1020
5422	*	0595	E	1190
5422	*	0680	E	1360
5422	*	0765	E	1530
5422	*	0850	E	1700

TAB DK Material

600 Heavy duty with Bearing

Side Flex Modular Belt Series 600, H=12,7 M=85

Backflex radius min. (in-min): 0.98/25

CODE STRUCTURE GUIDE (Example)			
5422	03	0680	F
Series	*Material	Width	Version

pg. 193
pg. 380->386

Metric Size

New

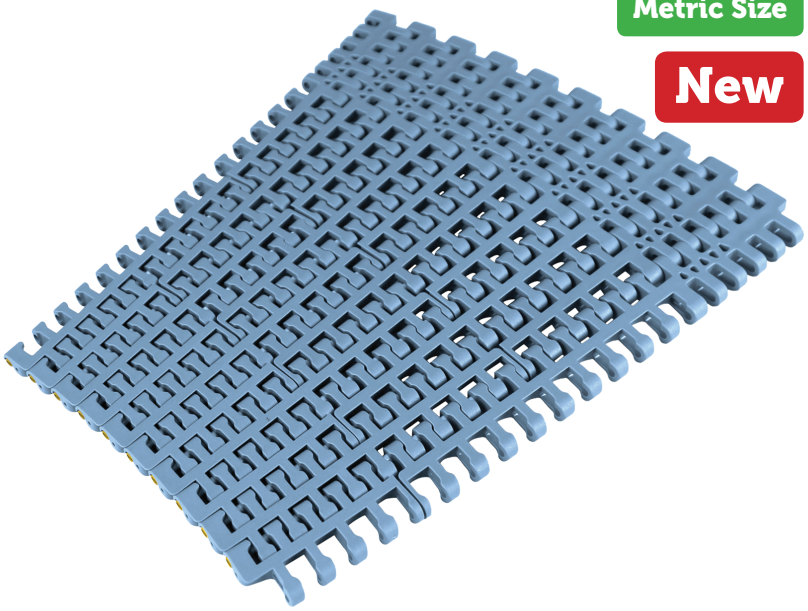

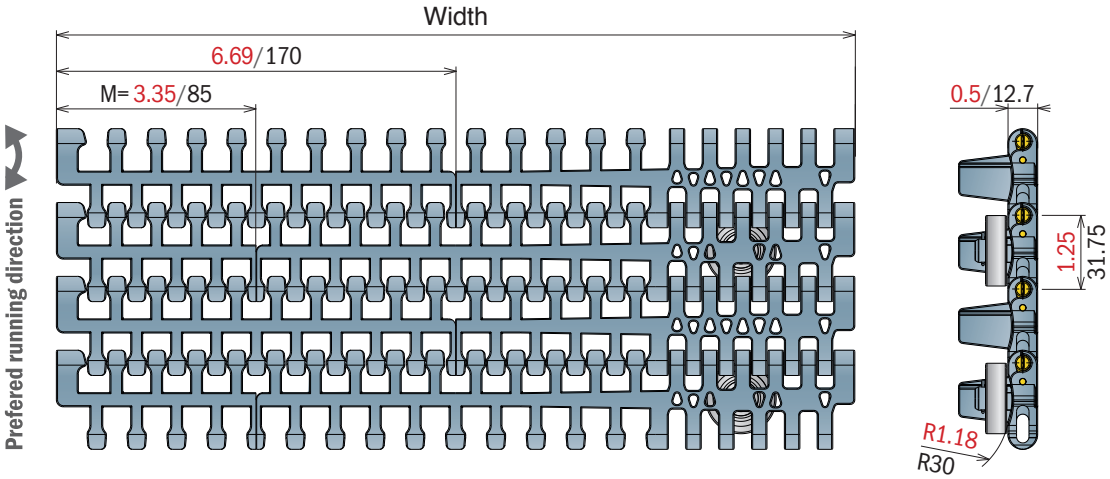

*Material

LFA - Code 01
Low friction Acetal

Max w. load:
Straight 2056 LBS/FT /30000 N/m
Curve 786 LBS/FT /3500 N
Weight: 1.84 LBS/FT²/9,0 kg/m²
Temp. r. dry: -40÷176°F/-40÷80°C
Temp. r. wet: -40÷149°F/-40÷65°C
Pin material: PBT white

MX - Code 03
Performance PBT

Max w. load:
Straight 1645 LBS/FT /24000 N/m
Curve 675 LBS/FT /3000 N
Weight: 1.78 LBS/FT²/8,7 kg/m²
Temp. r. dry: -40÷248°F/-40÷120°C
Temp. r. wet: -40÷140°F/-40÷60°C
Pin material: POM grey

DKM - Code 16
Aramide Reinforced Acetal

Max w. load:
Straight 2056 LBS/FT /30000 N/m
Curve 786 LBS/FT /3500 N
Weight: 1.84 LBS/FT²/9,0 kg/m²
Temp. r. dry: -40÷176°F/-40÷80°C
Temp. r. wet: -40÷149°F/-40÷65°C
Pin material: PBT white

MWX - Code 17
Polyamide Composite

Max w. load:
Straight 2056 LBS/FT /30000 N/m
Curve 786 LBS/FT /3500 N
Weight: 1.90 LBS/FT²/9,3 kg/m²
Temp. r. dry: -40÷219°F/-40÷104°C
Temp. r. wet: NR
Pin material: PBT white

MP - Code 13
Lubricated Acetal

Max w. load:
Straight 2056 LBS/FT /30000 N/m
Curve 786 LBS/FT /3500 N
Weight: 1.84 LBS/FT²/9,0 kg/m²
Temp. r. dry: -40÷176°F/-40÷80°C
Temp. r. wet: -40÷149°F/-40÷65°C
Pin material: PBT white

STANDARD

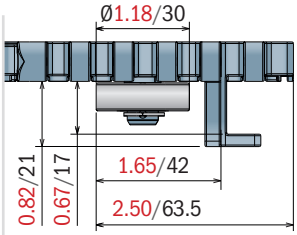

Series	Material	Width	Version	min radius
5422	*	0340	F	680
5422	*	0425	F	850
5422	*	0510	F	1020
5422	*	0595	F	1190
5422	*	0680	F	1360
5422	*	0765	F	1530
5422	*	0850	F	1700

Bearing Zoom

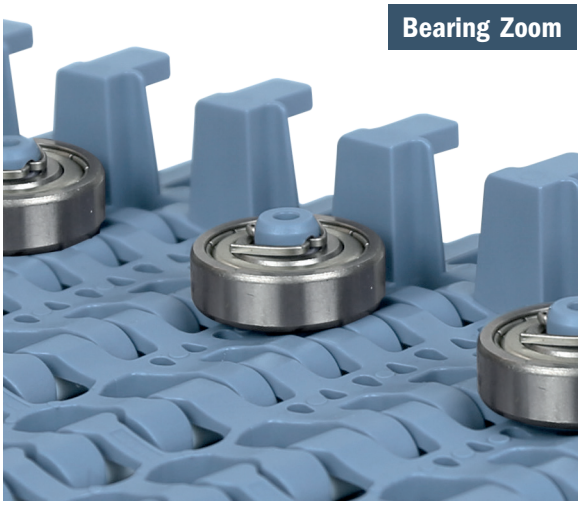

600 Small radius

Side Flex Modular Belt Series 600, H=12,7 M=85

Backflex radius min. (in-min): 0.98/25

Metric Size

CODE STRUCTURE GUIDE (Example)			
5423	03	0340	A
Series	*Material	Width	Version

pg. 193
pg. 380->386

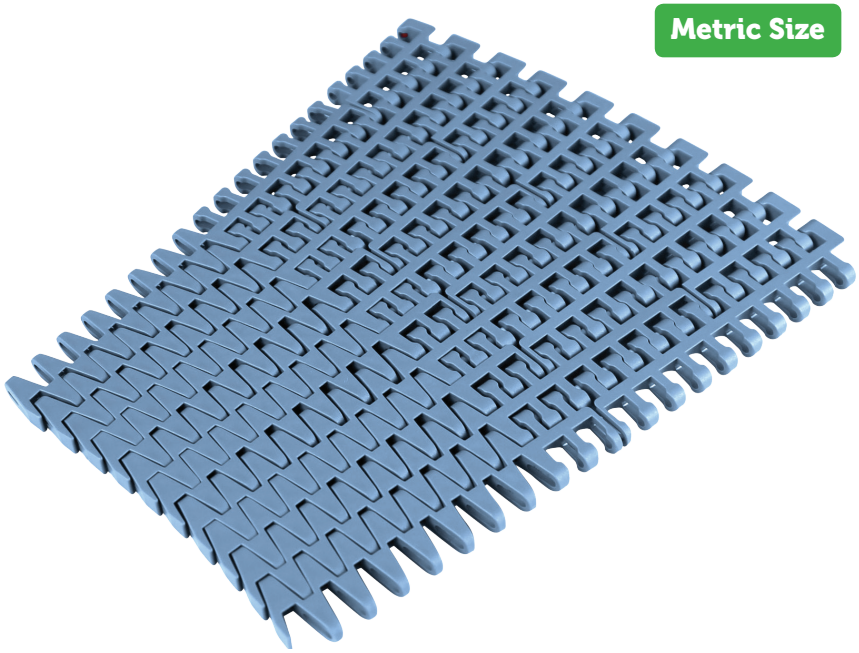

*Material

LFA - Code 01
Low friction Acetal

Max w. load:
Straight 2056 LBS/FT /30000 N/m
Curve 562 LBS/FT /2500 N
Weight: 1.43 LBS/FT²/7,0 kg/m²
Temp. r. dry: -40÷176°F/-40÷80°C
Temp. r. wet: -40÷149°F/-40÷65°C
Pin material: PBT white

MX - Code 03
Performance PBT

Max w. load:
Straight 1645 LBS/FT /24000 N/m
Curve 450 LBS/FT /2000 N
Weight: 1.39 LBS/FT²/6,8 kg/m²
Temp. r. dry: -40÷248°F/-40÷120°C
Temp. r. wet: -40÷140°F/-40÷60°C
Pin material: POM grey

DKM - Code 16
Aramide Reinforced Acetal

Max w. load:
Straight 2056 LBS/FT /30000 N/m
Curve 562 LBS/FT /2500 N
Weight: 1.43 LBS/FT²/7,0 kg/m²
Temp. r. dry: -40÷176°F/-40÷80°C
Temp. r. wet: -40÷149°F/-40÷65°C
Pin material: PBT white

MWX - Code 17
Polyamide Composite

Max w. load:
Straight 2056 LBS/FT /30000 N/m
Curve 562 LBS/FT /2500 N
Weight: 1.49 LBS/FT²/7,3 kg/m²
Temp. r. dry: -40÷219°F/-40÷104°C
Temp. r. wet: NR
Pin material: PBT white

MP - Code 13
Lubricated Acetal

Max w. load:
Straight 2056 LBS/FT /30000 N/m
Curve 562 LBS/FT /2500 N
Weight: 1.43 LBS/FT²/7,0 kg/m²
Temp. r. dry: -40÷176°F/-40÷80°C
Temp. r. wet: -40÷149°F/-40÷65°C
Pin material: PBT white

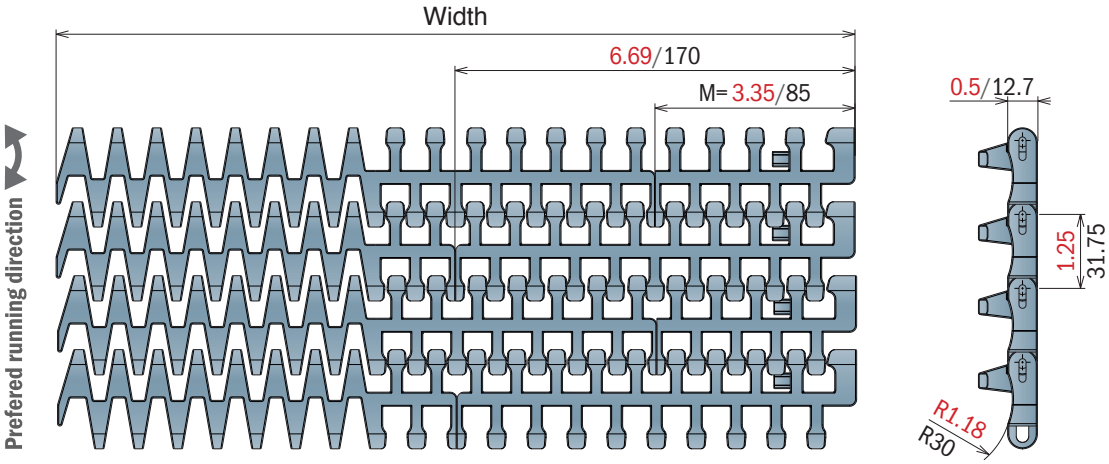

STANDARD

Series	Material	Width	Version	min radius
5423	*	0340	A	400
5423	*	0425	A	500
5423	*	0510	A	600
5423	*	0595	A	720
5423	*	0680	A	880
5423	*	0765	A	1040
5423	*	0850	A	1200

TAB

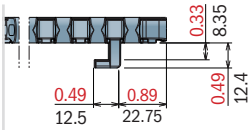

Series	Material	Width	Version	min radius
5423	*	0340	B	400
5423	*	0425	B	500
5423	*	0510	B	600
5423	*	0595	B	720
5423	*	0680	B	880
5423	*	0765	B	1040
5423	*	0850	B	1200

REVERSE TAB

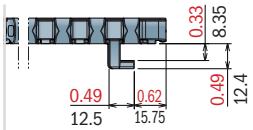

Series	Material	Width	Version	min radius
5423	*	0340	C	400
5423	*	0425	C	500
5423	*	0510	C	600
5423	*	0595	C	720
5423	*	0680	C	880
5423	*	0765	C	1040
5423	*	0850	C	1200

TAB REVERSE TAB

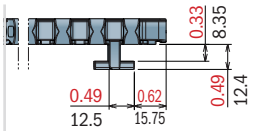

Series	Material	Width	Version	min radius
5423	*	0340	D	400
5423	*	0425	D	500
5423	*	0510	D	600
5423	*	0595	D	720
5423	*	0680	D	880
5423	*	0765	D	1040
5423	*	0850	D	1200

600 Heavy duty/Small radius

Side Flex Modular Belt Series 600, H=12,7 M=170

Backflex radius min. (in-min): 0.98/25

Metric Size

CODE STRUCTURE GUIDE (Example)			
5424	03	425	E
Series	*Material	Width	Version

pg. 193
pg. 380->386

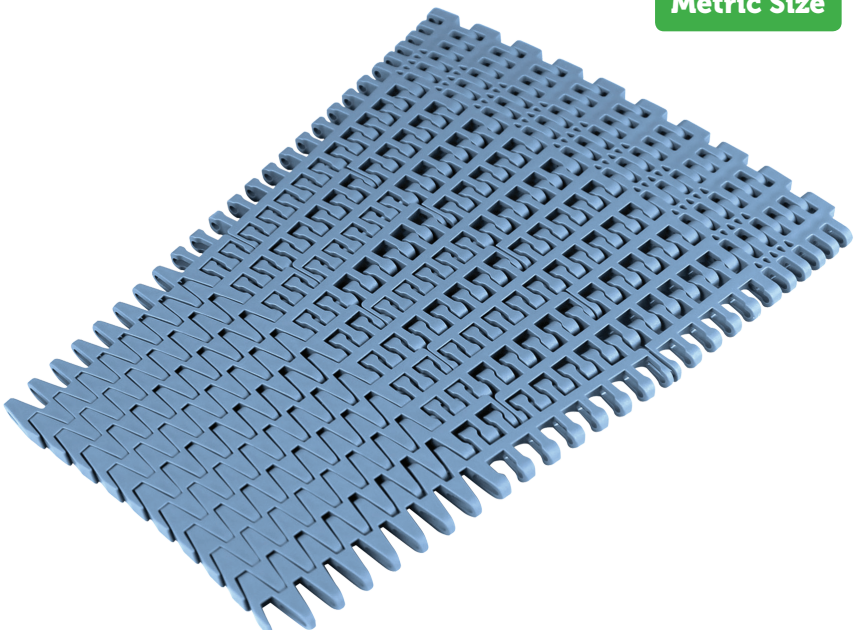

*Material

LFA - Code 01
Low friction Acetal

Max w. load:
Straight 2056 LBS/FT /30000 N/m
Curve 786 LBS /3500 N
Weight: 1.58 LBS/FT²/7,5 kg/m²
Temp. r. dry: -40÷176°F/-40÷80°C
Temp. r. wet: -40÷149°F/-40÷65°C
Pin material: PBT white

MX - Code 03
Performance PBT

Max w. load:
Straight 1645 LBS/FT /24000 N/m
Curve 675 LBS /3000 N
Weight: 1.54 LBS/FT²/7,3 kg/m²
Temp. r. dry: -40÷248°F/-40÷120°C
Temp. r. wet: -40÷140°F/-40÷60°C
Pin material: POM grey

DKM - Code 16
Aramide Reinforced Acetal

Max w. load:
Straight 2056 LBS/FT /30000 N/m
Curve 786 LBS /3500 N
Weight: 1,58 LBS/FT²/7,5 kg/m²
Temp. r. dry: -40÷176°F/-40÷80°C
Temp. r. wet: -40÷149°F/-40÷65°C
Pin material: PBT white

MWX - Code 17
Polyamide Composite

Max w. load:
Straight 2056 LBS/FT /30000 N/m
Curve 786 LBS /3500 N
Weight: 1.64 LBS/FT²/7,7 kg/m²
Temp. r. dry: -40÷219°F/-40÷104°C
Temp. r. wet: NR
Pin material: PBT white

MP - Code 13
Lubricated Acetal

Max w. load:
Straight 2056 LBS/FT /30000 N/m
Curve 786 LBS/3500 N
Weight: 1.58 LBS/FT²/7,5 kg/m²
Temp. r. dry: -40÷176°F/-40÷80°C
Temp. r. wet: -40÷149°F/-40÷65°C
Pin material: PBT white

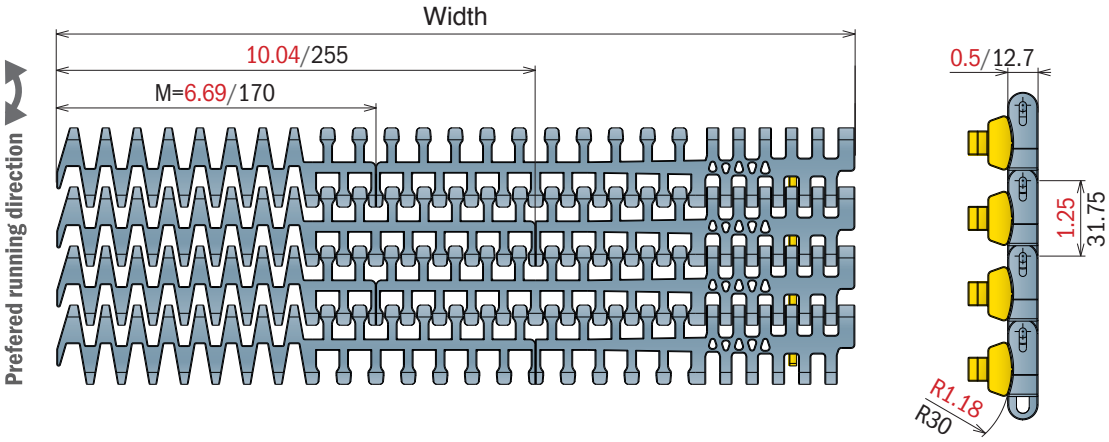

STANDARD

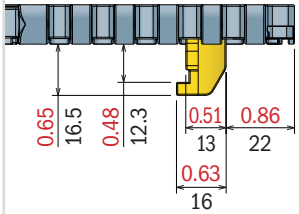

Series	Material	Width	Version	min radius
5424	*	0425	E	500
5424	*	0510	E	600
5424	*	0595	E	720
5424	*	0680	E	880
5424	*	0765	E	1040
5424	*	0850	E	1200

TAB DK Material

600 Heavy duty/Small radius with Bearing

Side Flex Modular Belt Series 600, H=12,7 M=85

Backflex radius min. (in-min): 0.98/25

CODE STRUCTURE GUIDE (Example)			
5424	01	0510	F
Series	*Material	Width	Version

pg. 193
pg. 380->386

Metric Size

New

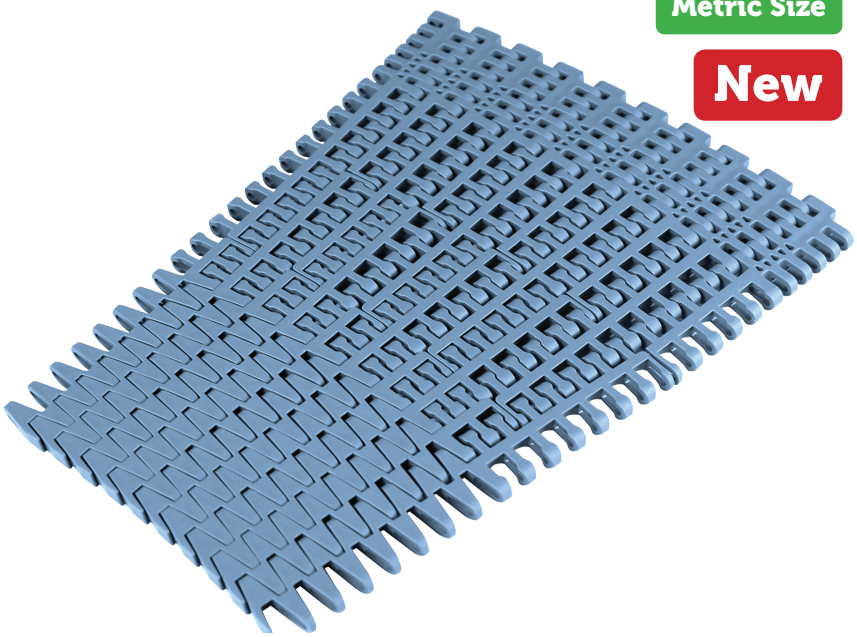

*Material

LFA - Code 01
Low friction Acetal

Max w. load:
Straight 2056 LBS/FT /30000 N/m
Curve 786 LBS /3500 N
Weight: 1.74 LBS/FT²/8,5 kg/m²
Temp. r. dry: -40÷176°F/-40÷80°C
Temp. r. wet: -40÷149°F/-40÷65°C
Pin material: PBT white

MX - Code 03
Performance PBT

Max w. load:
Straight 1645 LBS/FT /24000 N/m
Curve 450 LBS /2000 N
Weight: 1.70 LBS/FT²/8,3 kg/m²
Temp. r. dry: -40÷248°F/-40÷120°C
Temp. r. wet: -40÷140°F/-40÷60°C
Pin material: POM grey

DKM - Code 16
Aramide Reinforced Acetal

Max w. load:
Straight 2056 LBS/FT /30000 N/m
Curve 786 LBS /2500 N
Weight: 1.74 LBS/FT²/8,5 kg/m²
Temp. r. dry: -40÷176°F/-40÷80°C
Temp. r. wet: -40÷149°F/-40÷65°C
Pin material: PBT white

MWX - Code 17
Polyamide Composite

Max w. load:
Straight 2056 LBS/FT /30000 N/m
Curve 786 LBS /2500 N
Weight: 1.84 LBS/FT²/9,0 kg/m²
Temp. r. dry: -40÷219°F/-40÷104°C
Temp. r. wet: NR
Pin material: PBT white

MP - Code 13
Lubricated Acetal

Max w. load:
Straight 2056 LBS/FT /30000 N/m
Curve 786 LBS/2500 N
Weight: 1.74 LBS/FT²/8,5 kg/m²
Temp. r. dry: -40÷176°F/-40÷80°C
Temp. r. wet: -40÷149°F/-40÷65°C
Pin material: PBT white

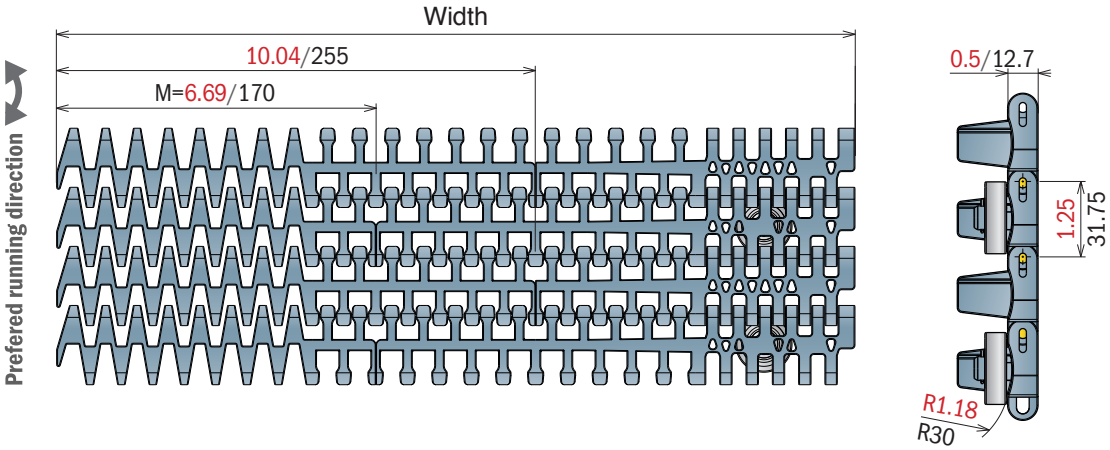

STANDARD

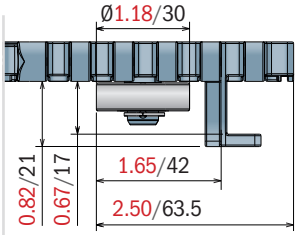

Series	Material	Width	Version	min radius
5424	*	0425	F	850
5424	*	0510	F	1020
5424	*	0595	F	1190
5424	*	0680	F	1360
5424	*	0765	F	1530
5424	*	0850	F	1700

Bearing Zoom

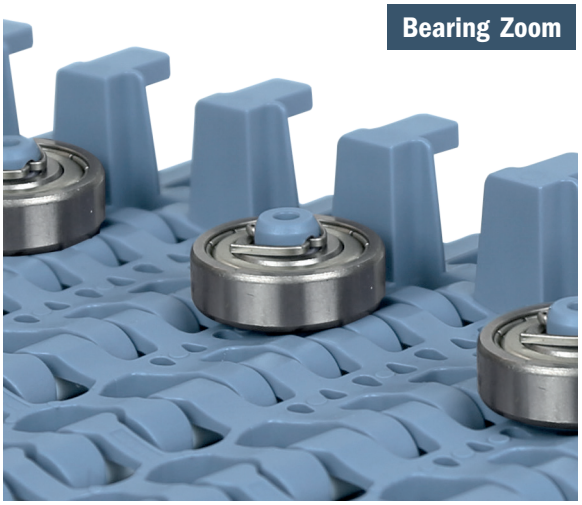

600 with pusher

Side Flex Modular Belt Series 600, H=12,7 M=85

Backflex radius min. (in-min): 0.98/25

Consult our engineering department for details.

Metric Size

pg. 193
pg. 380->386

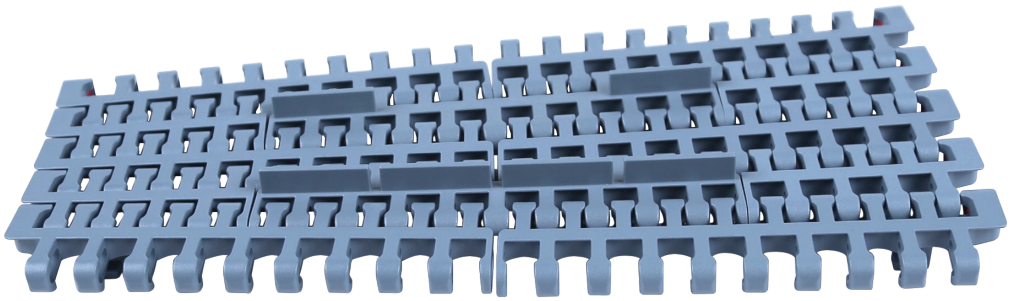

1047

Belt side guide

Part	Article-Nr.	Material	Width
1047	104700BC	BluLub	10 ft

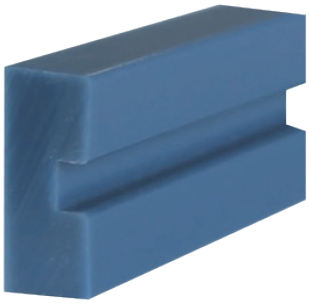

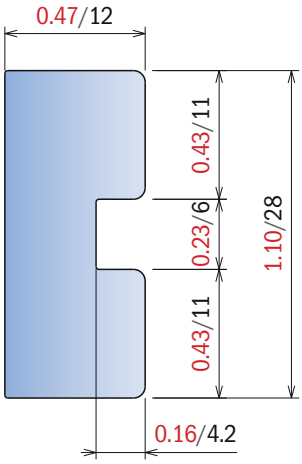

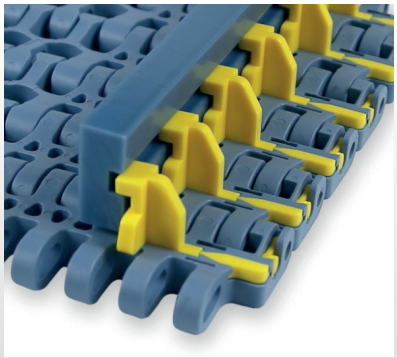

Material: Polyethylene UHMW-PE with molecu-lardensity 9,200,000 g/mo.
BluLub® new material with reduced coefficient of friction and higher wear resistence. BluLub complies with the code of Federal Regulations of FDA.
Linear expansion coefficient: $1.1x10^{-4}$ °F^{-1} ($2x10^{-4}$ °C^{-1})
Operating temperature: -40 to 176°F (-40 to +80°C)

500

Imperial Size

Pitch 50,8 mm
H= 24 mm

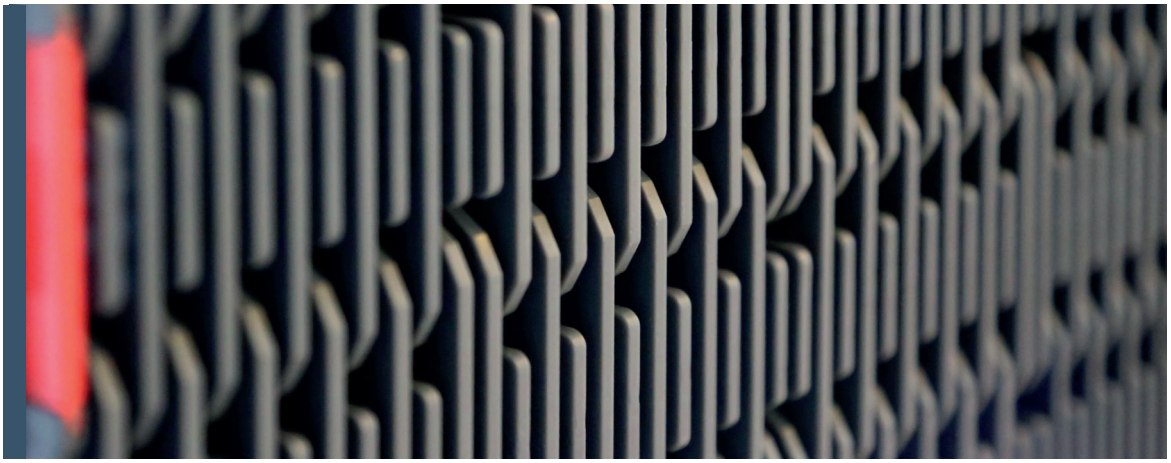

500 RR

Combs

500 RR

Raised Rib Belt Series 500 RR

CODE STRUCTURE GUIDE (Example)		
1348	11	0090
Series	*Material	Width

pg. 194-195
pg. 380->386

Imperial Size

***Material**

PP - Code 02
Polypropylene

Max w. load: 2055 LBS/FT /30000 N/m
Weight: 2.18 LBS/FT²/10,65 kg/m²
Temp. range: -0÷000°F/-4÷104 °C

Pin material: PP grey

PPX - Code 11
Polypropylene

Max w. load: 2055 LBS/FT /30000 N/m
Weight: 2.18 LBS/FT²/10,65 kg/m²
Temp. range: -0÷000°F/-4÷104 °C

Pin material: PP grey

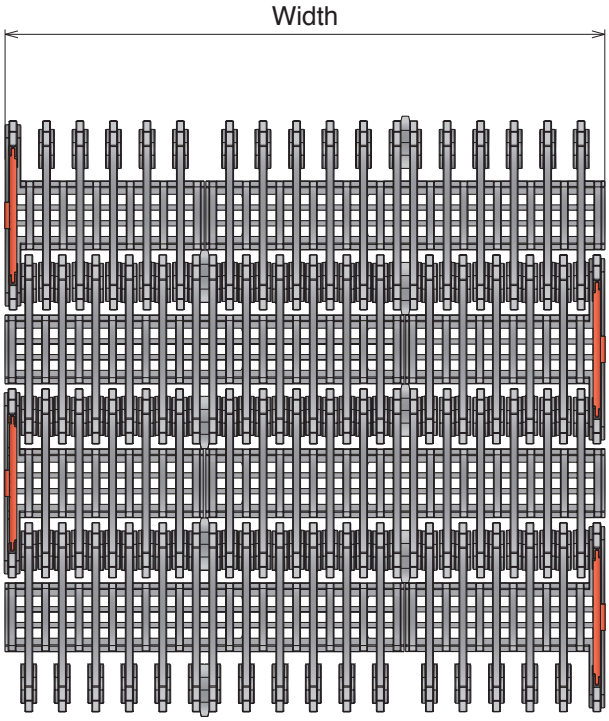

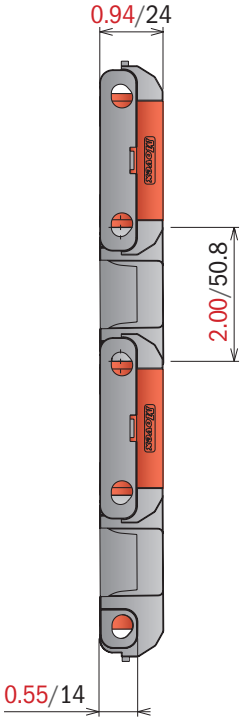

Series	Material	Width
1348	*	0060
1348	*	0063
1348	*	0066
1348	*	0069
1348	*	0072
1348	*	0075
1348	*	0078
1348	*	0081
1348	*	0084
1348	*	0087
1348	*	0090

Series	Material	Width
1348	*	0093
1348	*	0096
1348	*	0099
1348	*	0102
1348	*	0105
1348	*	0108
1348	*	0111
1348	*	0114
1348	*	0117
1348	*	0120

Material: Acetal resin
Screw: Stainless steel

389 Combs

Type A

Part	Article-Nr.
389	38901

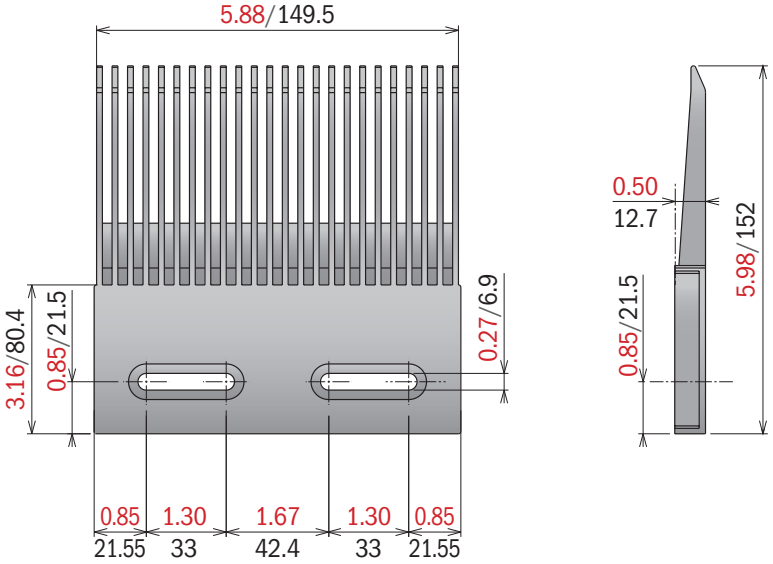

Type B

Part	Article-Nr.
389	38902

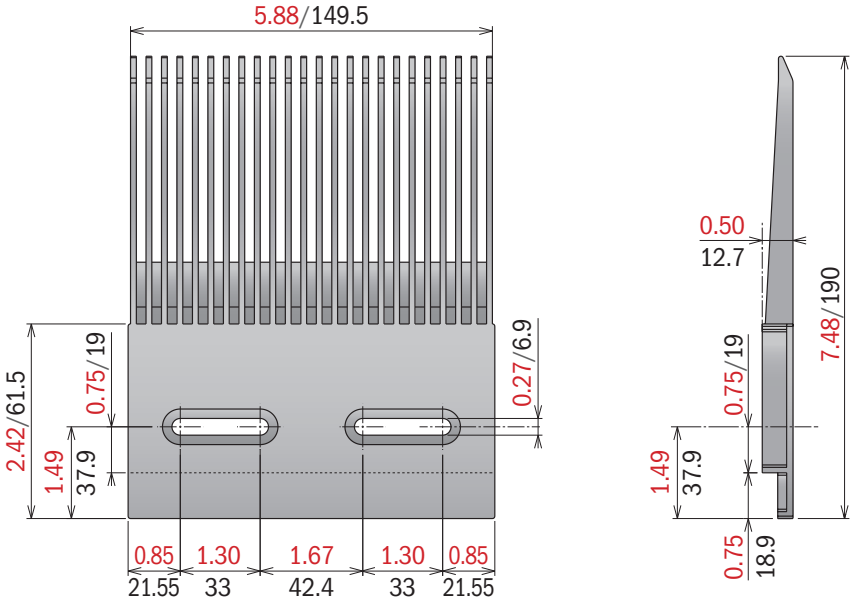

Movex

260/261

Imperial Size

Pitch 25,4 mm
H= 12,7 mm

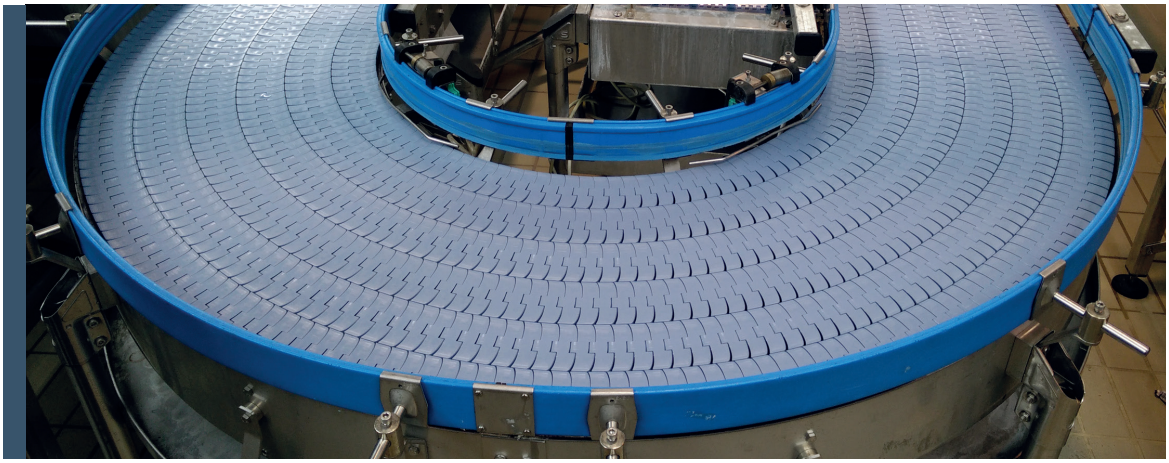

260 M FT
260 M FG
260 TAB
261 M
261 TAB

260 M FT

Sideflexing belt/chain

Magnetic System

Part	Article-Nr.	Ref.	A in-mm	Weight lbs/ft-kg/m
1151	11510103	260 M K330	3.30/83,8	12.65/1,75
1151	11510105	260 M K450	4.50/114,3	14.00/1,95

10 feet
3.048 m
120 links

pg. 190-191

pg. 380->386

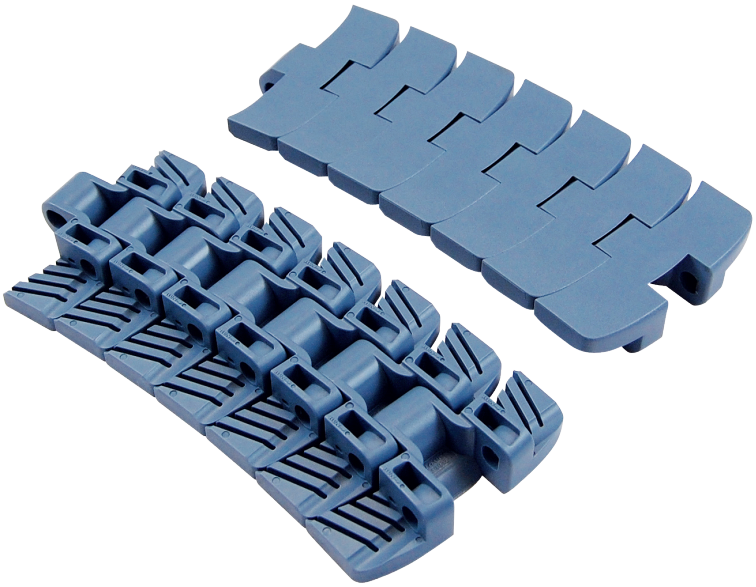

***Material**

LFA - Code 01
Low friction Acetal

Max w. load: 450 LBS /2000 N
Sideflex radius: 19.69 in/500 mm
Pin material: Ferritic SS

MX - Code 03
Performance PBT

Max w. load: 360 LBS /1600 N
Sideflex radius: 19.69 in/500 mm
Pin material: Ferritic SS

DKM - Code 16
Aramide Reinforced Acetal

Max w. load: 450 LBS /2000 N
Sideflex radius: 19.69 in/500 m
Pin material: Ferritic SS

MWX - Code 17
Polyamide Composite

Max w. load: 450 LBS /2000 N
Sideflex radius: 19.69 in/500 m
Pin material: Ferritic SS

MP - Code 13
Lubricated Acetal

Max w. load: 450 LBS /2000 N
Sideflex radius: 19.69 in/500 m
Pin material: Ferritic SS

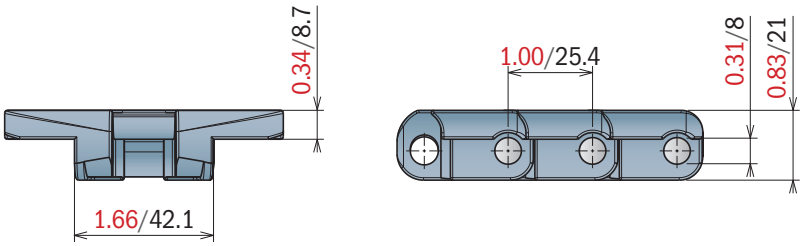

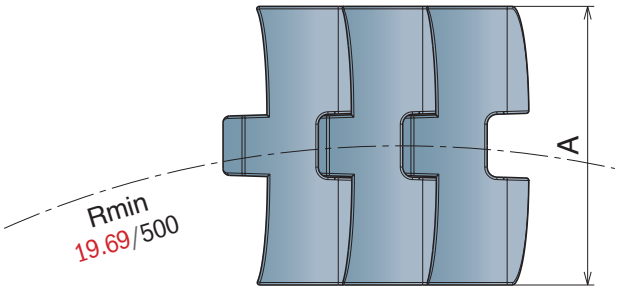

260 M FG

Sideflexing belt/chain

Magnetic System

Part	Article-Nr.	Ref.	A in-mm	Weight lbs/ft-kg/m
1154	11540103	260 M FG K330	3.30/83,8	10.80/1,50
1154	11540105	260 M FG K450	4.50/114,3	11.90/1,65

10 feet
3.048 m
120 links

pg. 190-191

pg. 380->386

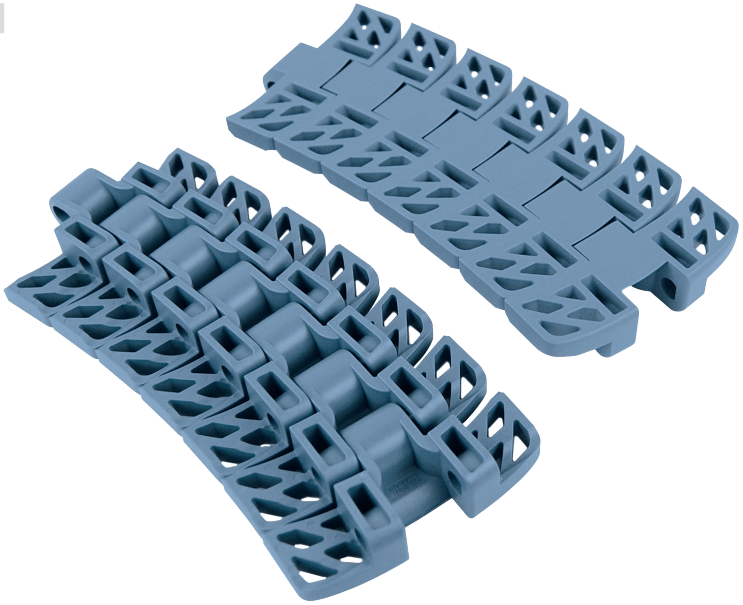

*Material

LFA - Code 01
Low friction Acetal

Max w. load: 450 LBS /2000 N
Sideflex radius: 19.69 in/500 mm
Pin material: Ferritic SS

MX - Code 03
Performance PBT

Max w. load: 360 LBS /1600 N
Sideflex radius: 19.69 in/500 mm
Pin material: Ferritic SS

DKM - Code 16
Aramide Reinforced Acetal

Max w. load: 450 LBS /2000 N
Sideflex radius: 19.69 in/500 m
Pin material: Ferritic SS

MWX - Code 17
Polyamide Composite

Max w. load: 450 LBS /2000 N
Sideflex radius: 19.69 in/500 m
Pin material: Ferritic SS

MP - Code 13
Lubricated Acetal

Max w. load: 450 LBS /2000 N
Sideflex radius: 19.69 in/500 m
Pin material: Ferritic SS

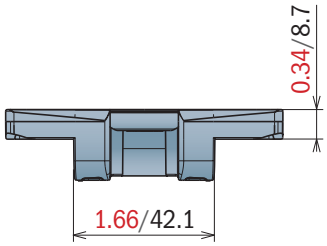

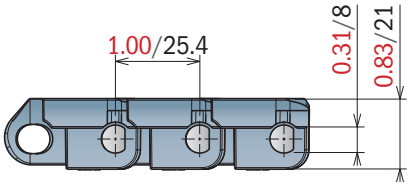

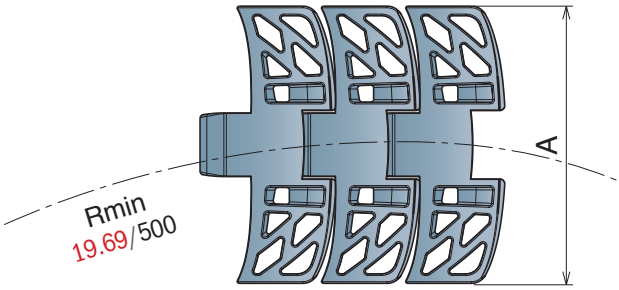

260 TAB

Sideflexing belt/chain

Tab System

Part	Article-Nr.	Ref.	A in-mm	Weight lbs/ft-kg/m
1152	11520103	260 TAB K330	3.30/83,8	13.38/1,85
1152	11520105	260 TAB K450	4.50/114,3	14.70/2,00

10 feet
3.048 m

120 links | pg. 190-191 | pg. 102-104 | pg. 380->386

***Material**

LFA - Code 01
Low friction Acetal

Max w. load: 450 LBS /2000 N
Sideflex radius: 19.69 in/500 mm
Pin material: Ferritic SS

MX - Code 03
Performance PBT

Max w. load: 360 LBS /1600 N
Sideflex radius: 19.69 in/500 mm
Pin material: Ferritic SS

DKM - Code 16
Aramide Reinforced Acetal

Max w. load: 450 LBS /2000 N
Sideflex radius: 19.69 in/500 m
Pin material: Ferritic SS

MWX - Code 17
Polyamide Composite

Max w. load: 450 LBS /2000 N
Sideflex radius: 19.69 in/500 m
Pin material: Ferritic SS

MP - Code 13
Lubricated Acetal

Max w. load: 450 LBS /2000 N
Sideflex radius: 19.69 in/500 m
Pin material: Ferritic SS

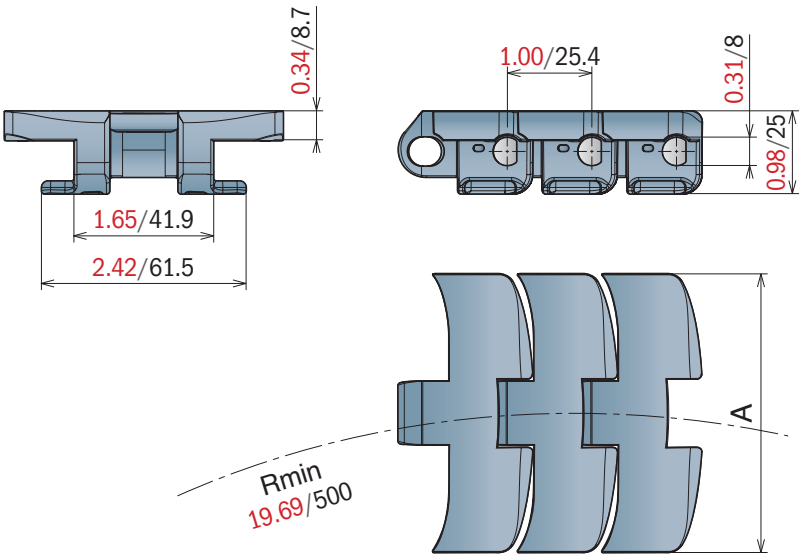

261 M FT

Sideflexing belt/chain

Part	Article-Nr.	Ref.	A in-mm	Weight lbs/ft-kg/m
1153	11530103	261 M K330	3.30/83,8	15.10/2,10
1153	11530105	261 M K450	4.50/114,3	16.30/2,26

10 feet
3.048 m
120 links

pg. 190-191

pg. 380->386

Magnetic System

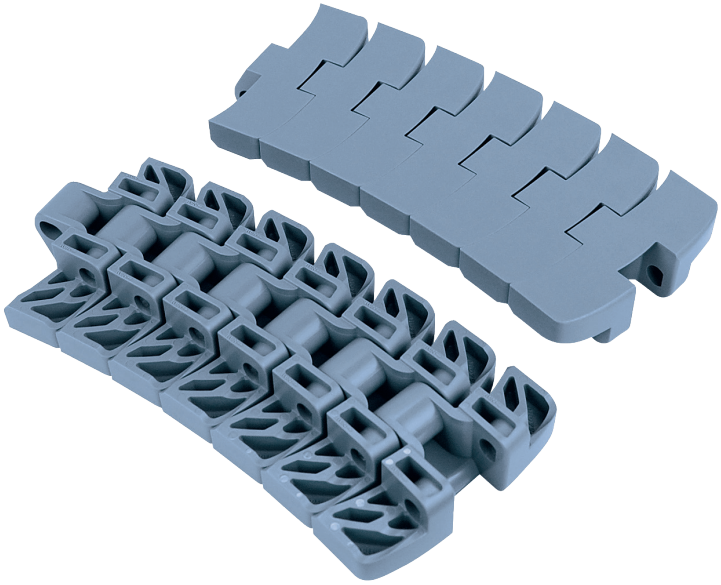

***Material**

LFA - Code 01
Low friction Acetal

Max w. load: 450 LBS /2000 N
Sideflex radius: 19.69 in/500 mm
Pin material: Ferritic SS

MX - Code 03
Performance PBT

Max w. load: 360 LBS /1600 N
Sideflex radius: 19.69 in/500 mm
Pin material: Ferritic SS

DKM - Code 16
Aramide Reinforced Acetal

Max w. load: 450 LBS /2000 N
Sideflex radius: 19.69 in/500 m
Pin material: Ferritic SS

MWX - Code 17
Polyamide Composite

Max w. load: 450 LBS /2000 N
Sideflex radius: 19.69 in/500 m
Pin material: Ferritic SS

MP - Code 13
Lubricated Acetal

Max w. load: 450 LBS /2000 N
Sideflex radius: 19.69 in/500 m
Pin material: Ferritic SS

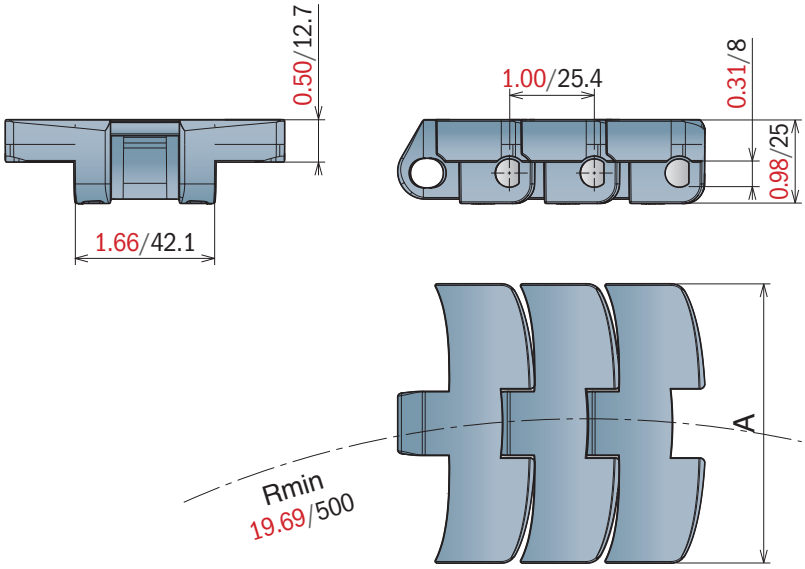

261 TAB

Sideflexing belt/chain

Tab System

Part	Article-Nr.	Ref.	A in-mm	Weight lbs/ft-kg/m
1190	11900103	261 TAB K330	3.30/83,8	13.38/1,85
1190	11900105	261 TAB K450	4.50/114,3	14.70/2,00

10 feet
3.048 m

120 links

pg. 190-191

pg. 380->386

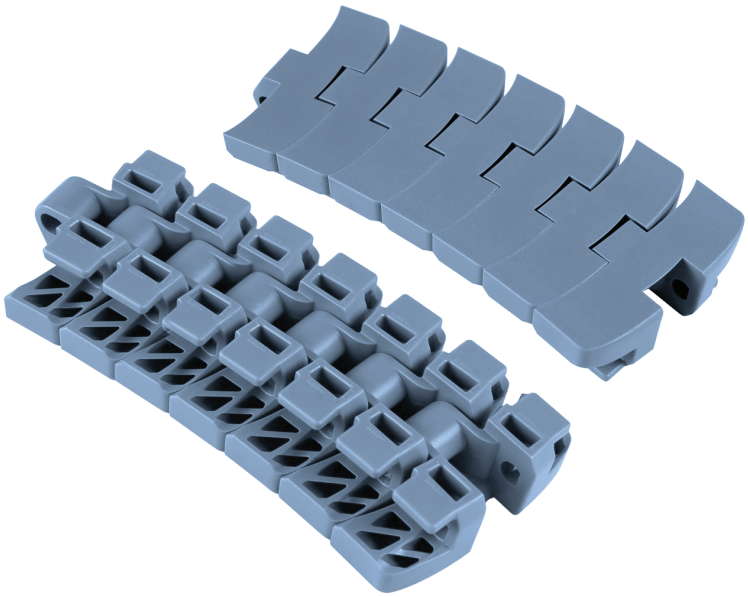

***Material**

LFA - Code 01
Low friction Acetal

Max w. load: 450 LBS /2000 N
Sideflex radius: 19.69 in/500 mm
Pin material: Ferritic SS

MX - Code 03
Performance PBT

Max w. load: 360 LBS /1600 N
Sideflex radius: 19.69 in/500 mm
Pin material: Ferritic SS

DKM - Code 16
Aramide Reinforced Acetal

Max w. load: 450 LBS /2000 N
Sideflex radius: 19.69 in/500 m
Pin material: Ferritic SS

MWX - Code 17
Polyamide Composite

Max w. load: 450 LBS /2000 N
Sideflex radius: 19.69 in/500 m
Pin material: Ferritic SS

MP - Code 13
Lubricated Acetal

Max w. load: 450 LBS /2000 N
Sideflex radius: 19.69 in/500 m
Pin material: Ferritic SS

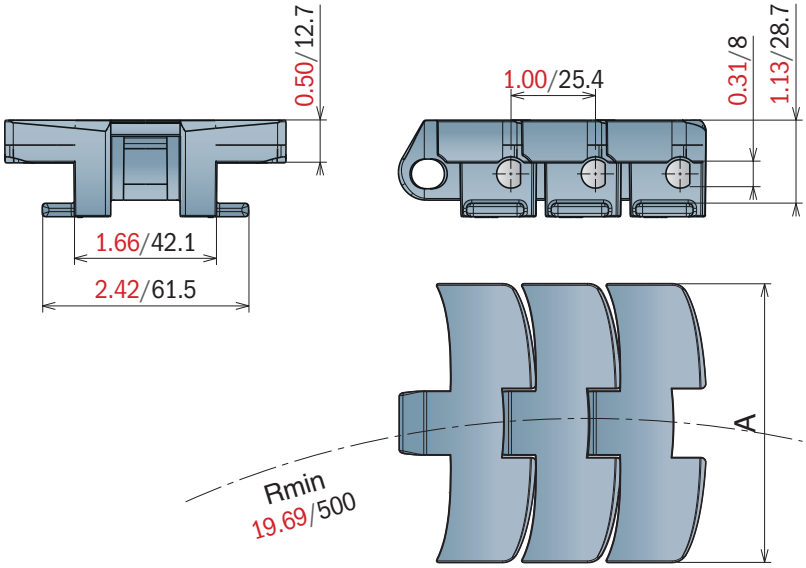

177

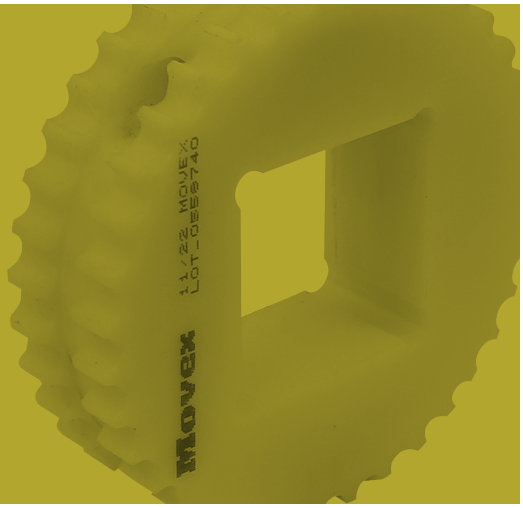

Belt sprockets

510

Pag 178

521

Pag 179

521

Pag 179

520

Pag 180

520

Pag 180

520

Pag 181

520

Pag 181

525-530

Pag 182

525-530

Pag 182

590

Pag 183

590

Pag 183

550

Pag 184

550

Pag 184

550

Pag 185

550

Pag 185

551

Pag 186

551

Pag 186

551

Pag 187

551

Pag 187

552

Pag 188

552

Pag 189

260-261

Pag 190

260-261

Pag 190

260-261

Pag 191

260-261

Pag 191

556

Pag 192

556

Pag 192

600

Pag 193

600

Pag 193

500RR

Pag 194

500RR

Pag 194

500RR SPLIT V.

Pag 195

Material: *Polyamide*
Screws: Stainless steel
Nuts: Zinc plated steel

510

Split drive sprocket, machined

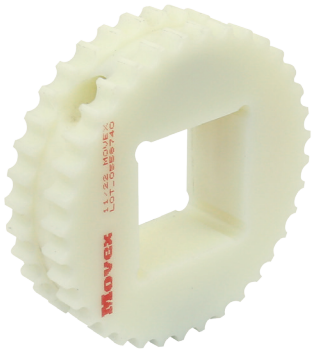

Part	Article-Nr.	Z-	Bore in	PD in-mm	OD in-mm	S in-mm
1599	159936YE	16*	¾	1.61/41	1.58/40,2	0.65/16,65
1599	159896YE	20	1	2.02/51,5	2.02/51,5	0.88/22,3
1601	160101YE	18*	1	1.83/46,5	1.86/47,3	0.79/20,2
1602	160111YE		¾ * ¾ ⊡			
1602	160201YE	24*	1	2.43/61,8	2.46/62,6	1.10/27,9
1603	160206YE		1 * 1 ⊡			
1603	160301Y	36	1	3.64/92,6	3.68/93,5	1.70/43,3
1603	160302Y		1¼			
1603	160303Y		1 7/16			
1603	160304Y		1½			
1603	160306Y		1 * 1 ⊡			
1603	160307Y		1¼ * 1¼ ⊡			
1603	160308Y		1½ * 1½ ⊡			

*Sprocket z-16, z-18, z-20 and z-24 are supplied non-split

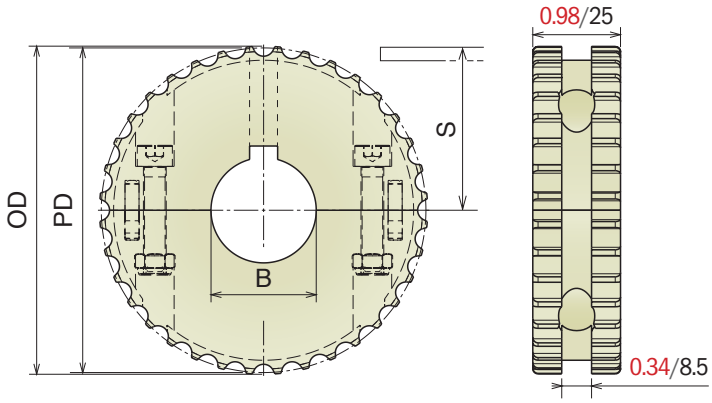

Material: Polyamide
Screws: Stainless steel
Nuts: Zinc plated steel

521 *Split drive sprocket, machined*

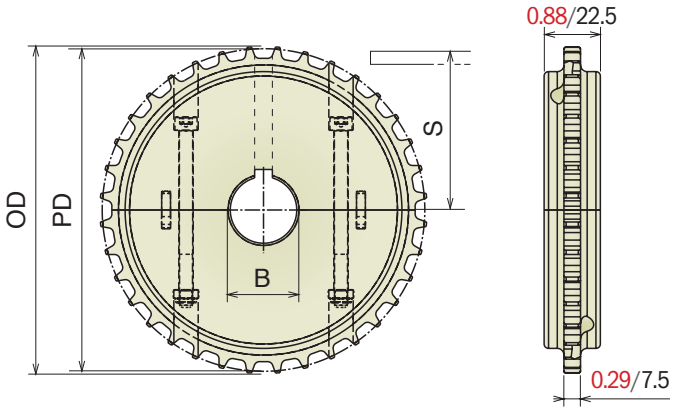

Part	Article-Nr.	Z-	Bore in	PD in-mm	OD in-mm	S in-mm
1561	156101Y	28	1	4.46/113,4	4.54/115,4	2.06/52,4
1561	156102Y		1¼			
1561	156103Y		1 7/16			
1561	156104Y		1½			
1561	156106Y		1 * 1 ⊡			
1561	156107Y		1¼ * 1¼ ⊡			
1561	156108Y		1½ * 1½ ⊡			
1562	156201Y	36	1	5.74/145,7	5.81/147,7	2.70/68,5
1562	156202Y		1¼			
1562	156203Y		1 7/16			
1562	156204Y		1½			
1562	156206Y		1 * 1 ⊡			
1562	156207Y		1¼ * 1¼ ⊡			
1562	156208Y		1½ * 1½ ⊡			
1563	156301Y	38	1	6.05/153,8	6.13/155,8	2.86/72,6
1563	156302Y		1¼			
1563	156303Y		1 7/16			
1563	156304Y		1½			
1563	156306Y		1 * 1 ⊡			
1563	156307Y		1¼ * 1¼ ⊡			
1563	156308Y		1½ * 1½ ⊡			
1564	156401Y	40	1	6.37/161,9	6.45/163,8	3.02/76,6
1564	156402Y		1¼			
1564	156403Y		1 7/16			
1564	156404Y		1½			
1564	156406Y		1 * 1 ⊡			
1564	156407Y		1¼ * 1¼ ⊡			
1564	156408Y		1½ * 1½ ⊡			

Split idler sprocket, machined

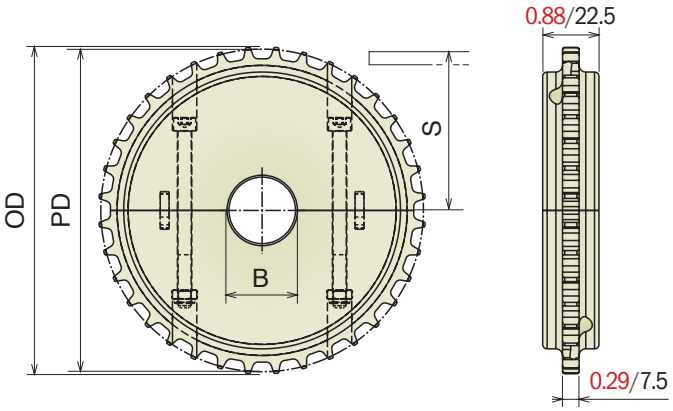

Part	Article-Nr.	Z-	Bore in	PD in-mm	OD in-mm	S in-mm
1561	156150	28	0.71*	4.46/113,4	4.54/115,4	2.06/52,4
1561	156151Y		1			
1561	156152Y		1¼			
1561	156153Y		1 7/16			
1561	156154Y		1½			
1562	156250	36	0.71*	5.74/145,7	5.81/147,7	2.70/68,5
1562	156251Y		1			
1562	156252Y		1¼			
1562	156253Y		1 7/16			
1562	156254Y		1½			
1563	156350	38	0.71*	6.05/153,8	6.13/155,8	2.86/72,6
1563	156351Y		1			
1563	156352Y		1¼			
1563	156353Y		1 7/16			
1563	156354Y		1½			
1564	156450	40	0.71*	6.37/161,9	6.45/163,8	3.02/76,6
1564	156451Y		1			
1564	156452Y		1¼			
1564	156453Y		1 7/16			
1564	156454Y		1½			

*Plain Bore

Material: Polyamide
Screws: Stainless steel
Nuts: Zinc plated steel

520

Split drive sprocket, machined

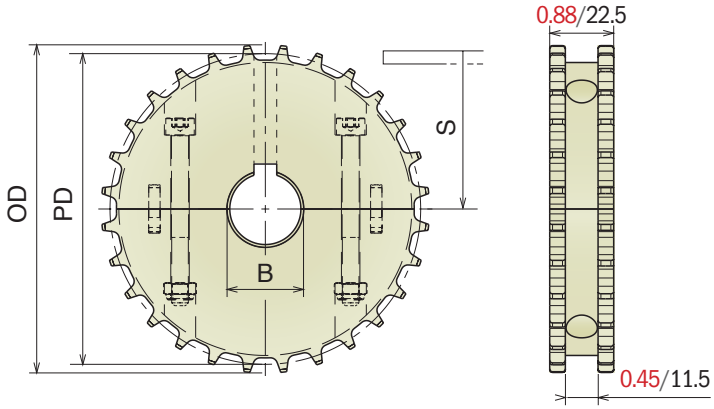

Part	Article-Nr.	Z-	Bore in	PD in-mm	OD in-mm	S in-mm
1501	150101Y	28	1	4.46/113,4	4.54/115,4	2.06/52,4
1501	150102Y		1¼			
1501	150103Y		1 7/16			
1501	150104Y		1½			
1501	150106Y		1 * 1			
1501	150107Y		1¼ * 1¼			
1501	150108Y		1½ * 1½			
1502	150201Y	36	1	5.74/145,7	5.81/147,7	2.70/68,5
1502	150202Y		1¼			
1502	150203Y		1 7/16			
1502	150204Y		1½			
1502	150206Y		1 * 1			
1502	150207Y		1¼ * 1¼			
1502	150208Y		1½ * 1½			
1503	150301Y	38	1	6.05/153,8	6.13/155,8	2.86/72,6
1503	150302Y		1¼			
1503	150303Y		1 7/16			
1503	150304Y		1½			
1503	150306Y		1 * 1			
1503	150307Y		1¼ * 1¼			
1503	150308Y		1½ * 1½			
1504	150401Y	40	1	6.37/161,9	6.45/163,8	3.02/76,6
1504	150402Y		1¼			
1504	150403Y		1 7/16			
1503	150404Y		1½			
1504	150406Y		1 * 1			
1504	150407Y		1¼ * 1¼			
1504	150408Y		1½ * 1½			

Split idler sprocket, machined

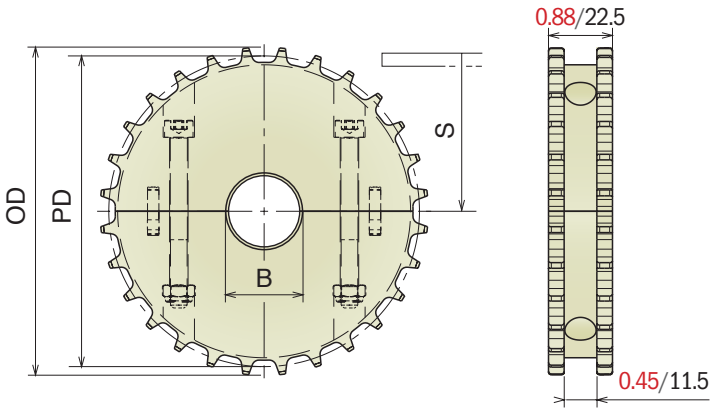

Part	Article-Nr.	Z-	Bore in	PD in-mm	OD in-mm	S in-mm
1501	150150	28	0.71*	4.46/113,4	4.54/115,4	2.06/52,4
1501	150151Y		1			
1501	150152Y		1¼			
1501	150153Y		1 7/16			
1501	150154Y		1½			
1502	150250	36	0.71*	5.74/145,7	5.81/147,7	2.70/68,5
1502	150251Y		1			
1502	150252Y		1¼			
1502	150253Y		1 7/16			
1502	150254Y		1½			
1503	150350	38	0.71*	6.05/153,8	6.13/155,8	2.86/72,6
1503	150351Y		1			
1503	150352Y		1¼			
1503	150353Y		1 7/16			
1503	150354Y		1½			
1504	150450	40	0.71*	6.37/161,9	6.45/163,8	3.02/76,6
1504	150451Y		1			
1504	150452Y		1¼			
1504	150453Y		1 7/16			
1504	150454Y		1½			

*Plain Bore

Material: *Polyamide reinforced*
Screws: Stainless steel
Nuts: Zinc plated steel

520 *Split drive sprocket, molded*

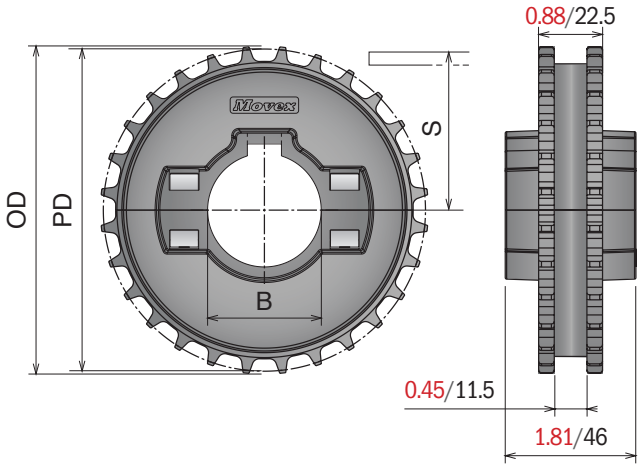

Part	Article-Nr.	Z-	Bore in	PD in-mm	OD in-mm	S in-mm
1505	150501Y	24	1	3.83/97,3	3.91/99,3	1.74/44,3
1505	150502Y		1¼			
1505	150503Y		1 7/16			
1505	150504Y		1½			
1505	150506Y		1 * 1 ⊡			
1505	150507Y		1¼ * 1¼ ⊡			
1505	150508Y		1½ * 1½ ⊡			
1506	150601Y	28	1	4.46/113,4	4.54/115,4	2.06/52,4
1506	150602Y		1¼			
1506	150603Y		1 7/16			
1506	150604Y		1½			
1506	150606Y		1 * 1 ⊡			
1506	150607Y		1¼ * 1¼ ⊡			
1506	150608Y		1½ * 1½ ⊡			
1507	150701Y	36	1	5.74/145,7	5.81/147,7	2.70/68,5
1507	150702Y		1¼			
1507	150703Y		1 7/16			
1507	150704Y		1½			
1507	150706Y		1 * 1 ⊡			
1507	150707Y		1¼ * 1¼ ⊡			
1507	150708Y		1½ * 1½ ⊡			

Split idler sprocket, molded

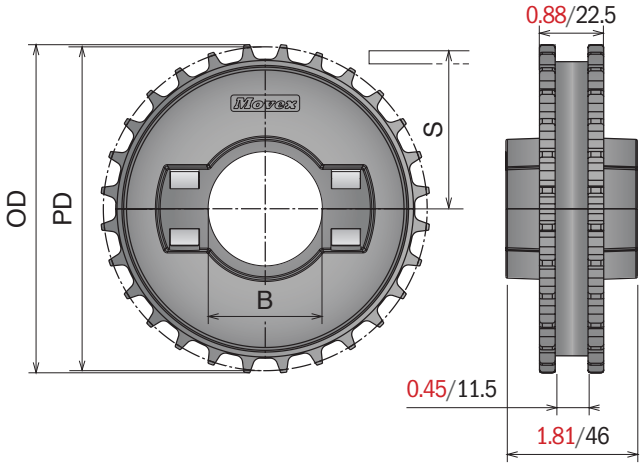

Part	Article-Nr.	Z-	Bore in	PD in-mm	OD in-mm	S in-mm
1505	150551Y	24	1	3.83/97,3	3.91/99,3	1.74/44,3
1505	150552Y		1¼			
1505	150553Y		1 7/16			
1505	150554Y		1½			
1506	150651Y	28	1	4.46/113,4	4.54/115,4	2.06/52,4
1506	150652Y		1¼			
1506	150653Y		1 7/16			
1506	150654Y		1½			
1507	150751Y	36	1	5.74/145,7	5.81/147,7	2.70/68,5
1507	150752Y		1¼			
1507	150753Y		1 7/16			
1507	150754Y		1½			

Material: Polyamide
Screws: Stainless steel
Nuts: Zinc plated steel

525-530

Split drive sprocket, machined

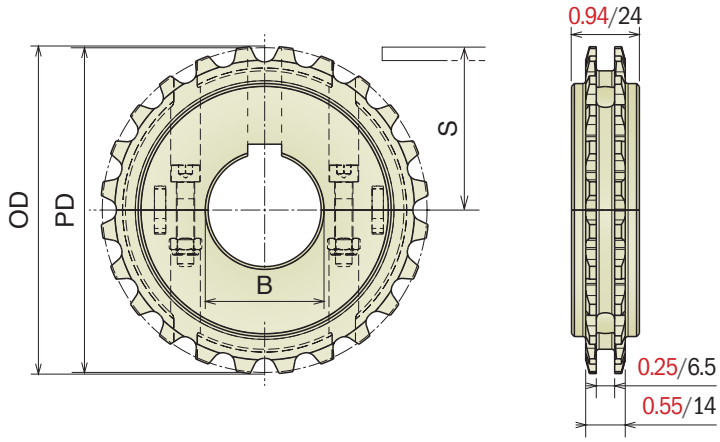

Part	Article-Nr.	Z-	Bore in	PD in-mm	OD in-mm	S in-mm
1581	158101YE	12**	1	2.29/58,1	2.29/58,2	0.95/24,1
1581	158106YE		1 * 1			
1582	158201YE	16**	1	3.03/77,1	3.06/77,7	1.32/33,6
1582	158202YE		1¼			
1582	158206YE		1 * 1			
1582	158207YE		1¼ * 1¼			
1583	158301Y	24	1	4.52/114,9	4.55/115,5	2.07/52,5
1583	158302Y		1¼			
1583	158303Y		1 7/16			
1583	158304Y		1½			
1583	158306Y		1 * 1			
1583	158307Y		1¼ * 1¼			
1583	158308Y		1½ * 1½			
1584	158401Y	32	1	6.04/153,4	6.09/154,8	2.82/71,75
1584	158402Y		1¼			
1584	158403Y		1 7/16			
1584	158404Y		1½			
1584	158406Y		1 * 1			
1584	158407Y		1¼ * 1¼			
1584	158408Y		1½ * 1½			

**Sprocket Z-12 and Z-16 are supplied non-split.

Split idler sprocket, machined

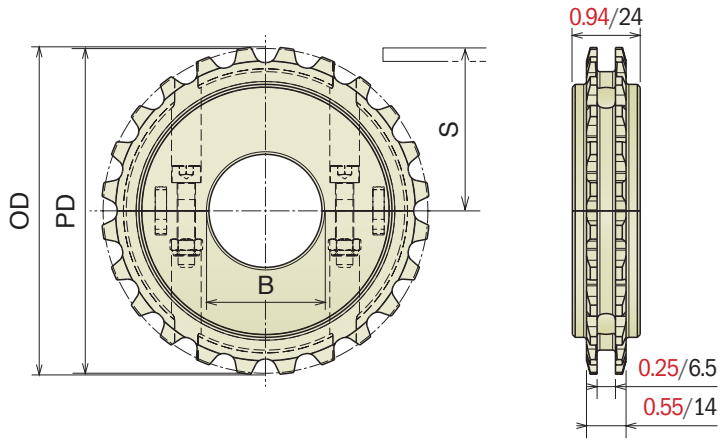

Part	Article-Nr.	Z-	Bore in	PD in-mm	OD in-mm	S in-mm
1581	158150E	12**	0.71*	2.29/58,1	2.29/58,2	0.95/24,1
1581	158151YE		1			
1582	158250E	16**	0.71*	3.03/77,1	3.06/77,7	1.32/33,6
1582	158251YE		1			
1582	158252YE		1¼			
1583	158350	24	0.71*	4.52/114,9	4.55/115,5	2.07/52,5
1583	158351Y		1			
1583	158352Y		1¼			
1583	158353Y		1 7/16			
1583	158354Y		1½			
1584	158450	32	0.71*	6.05/153,4	6.09/154,8	2.82/71,75
1584	158451Y		1			
1584	158452Y		1¼			
1584	158453Y		1 7/16			
1584	158454Y		1½			

**Idler sprocket Z-12 and Z-16 are supplied non-split.
*Plain Bore

Material: Polyamide
Screws: Stainless steel
Nuts: Zinc plated steel

590 *Split drive sprocket, machined*

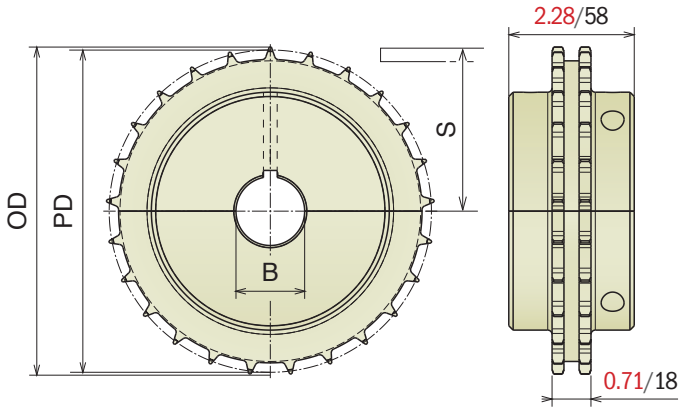

Part	Article-Nr.	Z-	Bore in	PD in-mm	OD in-mm	S in-mm
1511	151101Y	17	1	3.96/100,7	4.07/103,4	1.81/46,0
1511	151102Y		1¼			
1511	151103Y		1 7/16			
1511	151104Y		1½			
1511	151106Y		1 * 1 ⊿			
1511	151107Y		1¼ * 1¼ ⊿			
1511	151108Y		1½ * 1½ ⊿			
1512	151201Y	21	1	4.96/126,0	5.07/128,7	2.31/58,65
1512	151202Y		1¼			
1512	151203Y		1 7/16			
1512	151204Y		1½			
1512	151206Y		1 * 1 ⊿			
1512	151207Y		1¼ * 1¼ ⊿			
1512	151208Y		1½ * 1½ ⊿			
1513	151301Y	24	1	5.62/142,9	5.73/145,6	2.64/67,1
1513	151302Y		1¼			
1513	151303Y		1 7/16			
1513	151304Y		1½			
1513	151306Y		1 * 1 ⊿			
1513	151307Y		1¼ * 1¼ ⊿			
1513	151308Y		1½ * 1½ ⊿			
1514	151401Y	25	1	5.87/149,0	5.97/151,7	2.76/70,15
1514	151402Y		1¼			
1514	151403Y		1 7/16			
1514	151404Y		1½			
1514	151406Y		1 * 1 ⊿			
1514	151407Y		1¼ * 1¼ ⊿			
1514	151408Y		1½ * 1½ ⊿			

Split idler sprocket, machined

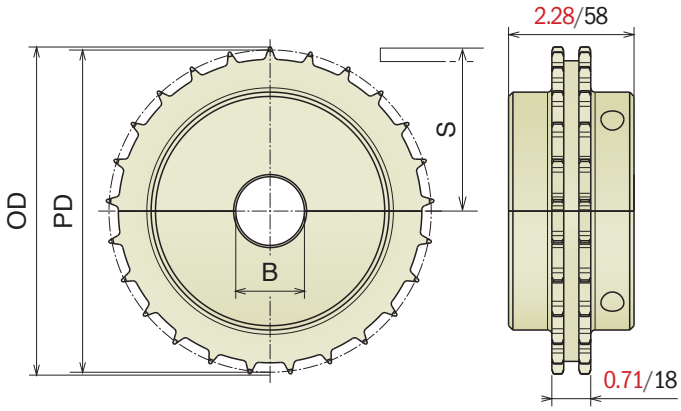

Part	Article-Nr.	Z-	Bore	PD in-mm	OD in-mm	S in-mm
1511	151150	17	0.71*	3.96/100,7	4.07/103,4	1.81/46,0
1511	151151Y		1			
1511	151152Y		1¼			
1511	151153Y		1 7/16			
1511	151154Y		1½			
1512	151250	21	0.71*	4.96/126,0	5.07/128,7	2.31/58,65
1512	151251Y		1			
1512	151252Y		1¼			
1512	151253Y		1 7/16			
1512	151254Y		1½			
1513	151350	24	0.71*	5.62/142,9	5.73/145,6	2.64/67,1
1513	151351Y		1			
1513	151352Y		1¼			
1513	151353Y		1 7/16			
1513	151354Y		1½			
1514	151450	25	0.71*	5.87/149,0	5.97/151,7	2.76/70,15
1514	151451Y		1			
1514	151452Y		1¼			
1514	151453Y		1 7/16			
1514	151454Y		1½			

*Plain Bore

Material: Polyamide
Screws: Stainless steel
Nuts: Zinc plated steel

550 *Split drive sprocket, machined*

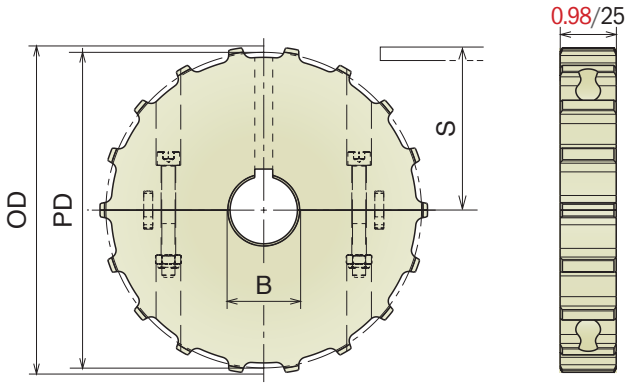

Part	Article-Nr.	Z-	Bore in	PD in-mm	OD in-mm	S in-mm
1521	152101Y	14	1	4.49/114,1	4.49/114,0	2.07/52,7
1521	152102Y		1¼			
1521	152103Y		1 7/16			
1521	152104Y		1½			
1521	152106Y		1 * 1			
1521	152107Y		1¼ * 1¼			
1521	152108Y		1½ * 1½			
1522	152201Y	16	1	5.12/130,2	5.12/130,0	2.39/60,7
1522	152202Y		1¼			
1522	152203Y		1 7/16			
1522	152204Y		1½			
1522	152206Y		1 * 1			
1522	152207Y		1¼ * 1¼			
1522	152208Y		1½ * 1½			
1523	152301Y	18	1	5.76/146,3	5.75/146,0	2.71/68,8
1523	152302Y		1¼			
1523	152303Y		1 7/16			
1523	152304Y		1½			
1523	152306Y		1 * 1			
1523	152307Y		1¼ * 1¼			
1523	152308Y		1½ * 1½			
1524	152401Y	20	1	6.39/162,4	6.38/162,0	3.02/76,8
1524	152402Y		1¼			
1524	152403Y		1 7/16			
1524	152404Y		1½			
1524	152406Y		1 * 1			
1524	152407Y		1¼ * 1¼			
1524	152408Y		1½ * 1½			

Split idler sprocket, machined

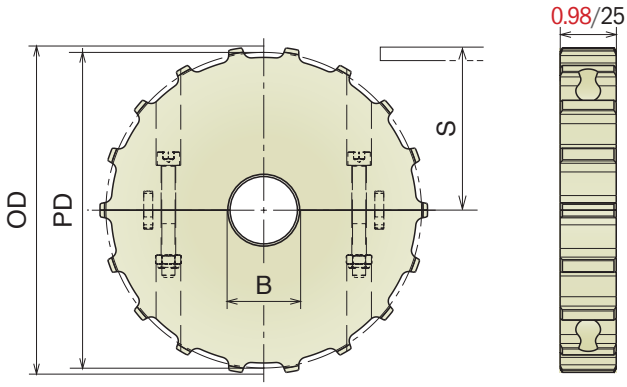

Part	Article-Nr.	Z-	Bore in	PD in-mm	OD in-mm	S in-mm
1521	152150	14	0.71*	4.49/114,1	4.49/114,0	2.07/52,7
1521	152151Y		1			
1521	152152Y		1¼			
1521	152153Y		1 7/16			
1521	152154Y		1½			
1522	152250	16	0.71*	5.12/130,2	5.12/130,0	2.39/60,7
1522	152251Y		1			
1522	152252Y		1¼			
1522	152253Y		1 7/16			
1522	152254Y		1½			
1523	152350	18	0.71*	5.76/146,3	5.75/146,0	2.71/68,8
1523	152351Y		1			
1523	152352Y		1¼			
1523	152353Y		1 7/16			
1523	152354Y		1½			
1524	152450	20	0.71*	6.39/162,4	6.38/162,0	3.02/76,8
1524	152451Y		1			
1524	152452Y		1¼			
1524	152453Y		1 7/16			
1524	152454Y		1½			

*Plain Bore

Material: *Polyamide reinforced*
Screws: Stainless steel
Nuts: Zinc plated steel

550 *Split drive sprocket, molded*

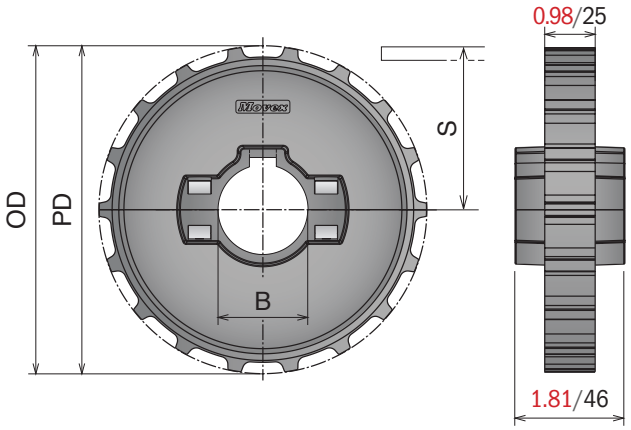

Part	Article-Nr.	Z-	Bore in	PD in-mm	OD in-mm	S in-mm
1525	152501Y	14	1	4.49/114,1	4.49/114,0	2.07/52,7
1525	152502Y		1¼			
1525	152503Y		1 7/16			
1525	152504Y		1½			
1525	152506Y		1 * 1 ⊡			
1525	152507Y		1¼ * 1¼ ⊡			
1525	152508Y		1½ * 1½ ⊡			
1526	152601Y	16	1	5.12/130,2	5.12/130,0	2.39/60,7
1526	152602Y		1¼			
1526	152603Y		1 7/16			
1526	152604Y		1½			
1526	152606Y		1 * 1 ⊡			
1526	152607Y		1¼ * 1¼ ⊡			
1526	152608Y		1½ * 1½ ⊡			
1527	152701Y	18	1	5.76/146,3	5.75/146,0	2.71/68,8
1527	152702Y		1¼			
1527	152703Y		1 7/16			
1527	152704Y		1½			
1527	152706Y		1 * 1 ⊡			
1527	152707Y		1¼ * 1¼ ⊡			
1527	152708Y		1½ * 1½ ⊡			
1528	152801Y	20	1	6.39/162,4	6.38/162,0	3.02/76,8
1528	152802Y		1¼			
1528	152803Y		1 7/16			
1528	152804Y		1½			
1528	152806Y		1 * 1 ⊡			
1528	152807Y		1¼ * 1¼ ⊡			
1528	152808Y		1½ * 1½ ⊡			

Split idler sprocket, molded

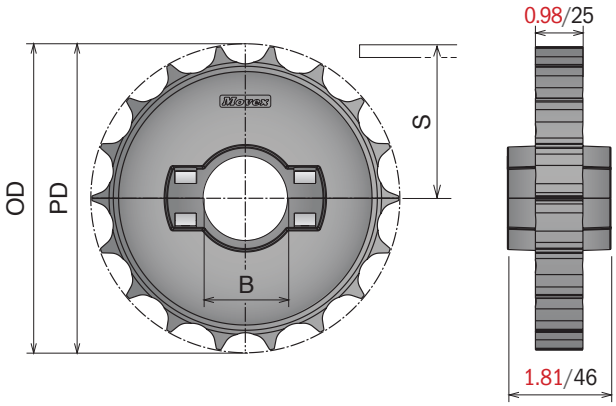

Part	Article-Nr.	Z-	Bore in	PD in-mm	OD in-mm	S in-mm
1525	152551Y	14	1	4.49/114,1	4.49/114,0	2.07/52,7
1525	152552Y		1¼			
1525	152553Y		1 7/16			
1525	152554Y		1½			
1526	152651Y	16	1	5.12/130,2	5.12/130,0	2.39/60,7
1526	152652Y		1¼			
1526	152653Y		1 7/16			
1526	152654Y		1½			
1527	152751Y	18	1	5.76/146,3	5.75/146,0	2.71/68,8
1527	152752Y		1¼			
1527	152753Y		1 7/16			
1527	152754Y		1½			
1528	152851Y	20	1	6.39/162,4	6.38/162,0	3.02/76,8
1528	152852Y		1¼			
1528	152853Y		1 7/16			
1528	152854Y		1½			

Material: *Polyamide*
Screws: Stainless steel
Nuts: Zinc plated steel

551

Split drive sprocket, machined

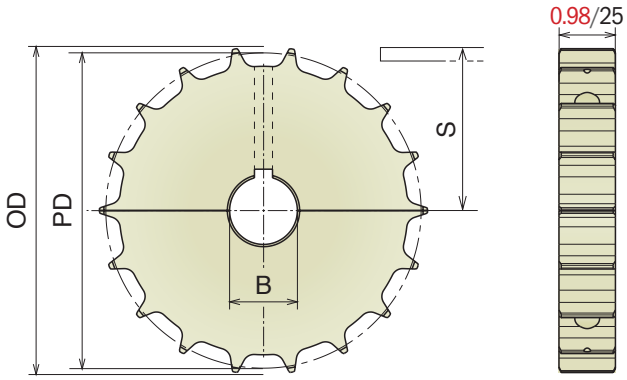

Part	Article-Nr.	Z-	Bore in	PD in-mm	OD in-mm	S in-mm
1531	153101Y	14	1	4.50/114,2	4.47/113,5	1.99/50,7
1531	153102Y		1¼			
1531	153103Y		1 7/16			
1531	153104Y		1½			
1531	153106Y		1 * 1			
1531	153107Y		1¼ * 1¼			
1531	153108Y		1½ * 1½			
1532	153201Y	16	1	5.12/130,2	5.08/129,0	2.31/58,7
1532	153202Y		1¼			
1532	153203Y		1 7/16			
1532	153204Y		1½			
1532	153206Y		1 * 1			
1532	153207Y		1¼ * 1¼			
1532	153208Y		1½ * 1½			
1533	153301Y	18	1	5.76/146,3	5.72/145,3	2.62/66,7
1533	153302Y		1¼			
1533	153303Y		1 7/16			
1533	153304Y		1½			
1533	153306Y		1 * 1			
1533	153307Y		1¼ * 1¼			
1533	153308Y		1½ * 1½			
1534	153401Y	20	1	6.39/162,4	6.37/161,7	2.94/74,8
1534	153402Y		1¼			
1534	153403Y		1 7/16			
1533	153404Y		1½			
1534	153406Y		1 * 1			
1534	153407Y		1¼ * 1¼			
1534	153408Y		1½ * 1½			

Split idler sprocket, machined

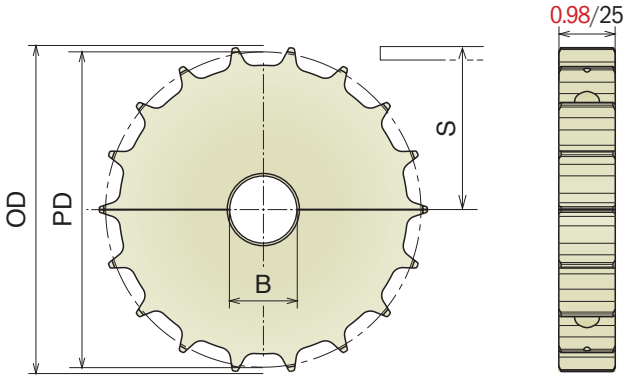

Part	Article-Nr.	Z-	Bore in	PD in-mm	OD in-mm	S in-mm
1531	153150	14	0.71*	4.50/114,2	4.47/114,0	1.99/50,7
1531	153151Y		1			
1531	153152Y		1¼			
1531	153153Y		1 7/16			
1531	153154Y		1½			
1532	153250	16	0.71*	5.12/130,2	5.08/129,0	2.31/58,7
1532	153251Y		1			
1532	153252Y		1¼			
1532	153253Y		1 7/16			
1532	153254Y		1½			
1533	153350	18	0.71*	5.76/146,3	5.72/145,3	2.62/66,7
1533	153351Y		1			
1533	153352Y		1¼			
1533	152353Y		1 7/16			
1533	153354Y		1½			
1534	153450	20	0.71*	6.39/162,4	6.37/161,7	2.94/74,8
1534	153451Y		1			
1534	153452Y		1¼			
1534	153453Y		1 7/16			
1534	153454Y		1½			

*Plain Bore

Material: *Polyamide reinforced*
Screws: Stainless steel
Nuts: Zinc plated steel

551 *Split drive sprocket, molded*

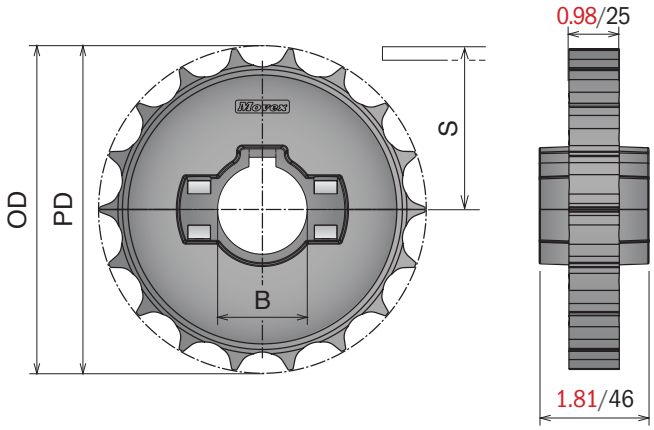

Part	Article-Nr.	Z-	Bore in	PD in-mm	OD in-mm	S in-mm
1535	153501Y	14	1	4.50/114,2	4.47/113,5	1.99/50,7
1535	153502Y		1¼			
1535	153503Y		1 7/16			
1535	153504Y		1½			
1535	153506Y		1 * 1 ⊡			
1535	153507Y		1¼ * 1¼ ⊡			
1535	153508Y		1½ * 1½ ⊡			
1536	153601Y	16	1	5.12/130,2	5.08/129,0	2.31/58,7
1536	153602Y		1¼			
1536	153603Y		1 7/16			
1536	153604Y		1½			
1536	153606Y		1 * 1 ⊡			
1536	153607Y		1¼ * 1¼ ⊡			
1536	153608Y		1½ * 1½ ⊡			
1537	153701Y	18	1	5.76/146,3	5.72/145,3	2.62/66,7
1537	153702Y		1¼			
1537	153703Y		1 7/16			
1537	153704Y		1½			
1537	153706Y		1 * 1 ⊡			
1537	153707Y		1¼ * 1¼ ⊡			
1537	153708Y		1½ * 1½ ⊡			
1538	153801Y	20	1	6.39/162,4	6.37/161,7	2.94/74,8
1538	153802Y		1¼			
1538	153803Y		1 7/16			
1538	153804Y		1½			
1538	153806Y		1 * 1 ⊡			
1538	153807Y		1¼ * 1¼ ⊡			
1538	153808Y		1½ * 1½ ⊡			

Split idler sprocket, molded

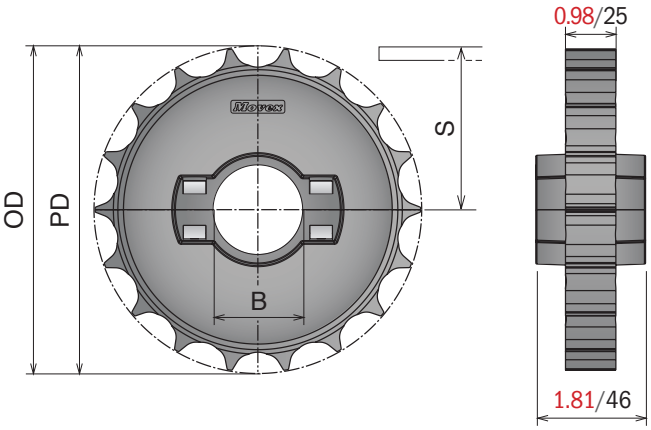

Part	Article-Nr.	Z-	Bore in	PD in-mm	OD in-mm	S in-mm
1535	153551Y	14	1	4.50/114,2	4.47/113,5	1.99/50,7
1535	153552Y		1¼			
1535	153553Y		1 7/16			
1535	153554Y		1½			
1536	153651Y	16	1	5.12/130,2	5.08/129,0	2.31/58,7
1536	153652Y		1¼			
1536	153653Y		1 7/16			
1536	153654Y		1½			
1537	153751Y	18	1	5.76/146,3	5.72/145,3	2.62/66,7
1537	153752Y		1¼			
1537	153753Y		1 7/16			
1537	153754Y		1½			
1538	153851Y	20	1	6.39/162,4	6.37/161,7	2.94/74,8
1538	153852Y		1¼			
1538	153853Y		1 7/16			
1538	153854Y		1½			

Material: *Polyamide*
Screws: Stainless steel
Nuts: Zinc plated steel

552 *Split drive sprocket, machined*

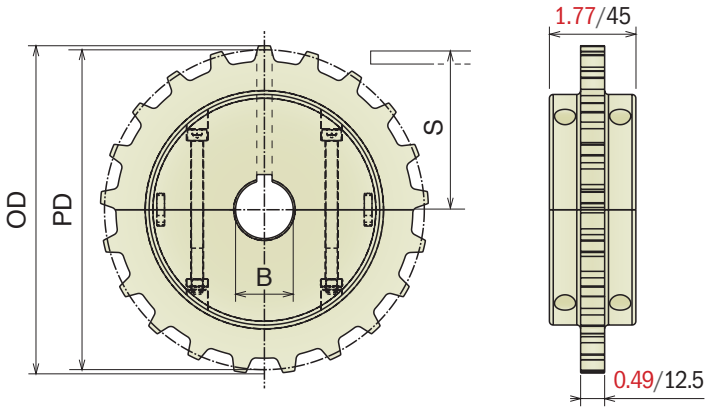

Part	Article-Nr.	Z-	Bore in	PD in-mm	OD in-mm	S in-mm
1611	161101Y	16	1	5.12/130,2	5.14/130,6	2.31/58,7
1611	161102Y		1¼			
1611	161103Y		1 7/16			
1611	161104Y		1½			
1611	161106Y		1 * 1 ⊡			
1611	161107Y		1¼ * 1¼ ⊡			
1611	161108Y		1½ * 1½ ⊡			
1612	161201Y	18	1	5.76/146,3	5.78/146,9	2.63/66,8
1612	161202Y		1¼			
1612	161203Y		1 7/16			
1612	161204Y		1½			
1612	161206Y		1 * 1 ⊡			
1612	161207Y		1¼ * 1¼ ⊡			
1612	161208Y		1½ * 1½ ⊡			
1613	161301Y	21	1	6.71/170,4	6.72/170,7	3.10/78,8
1613	161302Y		1¼			
1613	161303Y		1 7/16			
1613	161304Y		1½			
1613	161306Y		1 * 1 ⊡			
1613	161307Y		1¼ * 1¼ ⊡			
1613	161308Y		1½ * 1½ ⊡			
1614	161401Y	25	1	7.98/202,7	8.04/204,2	3.74/95,0
1614	161402Y		1¼			
1614	161403Y		1 7/16			
1614	161404Y		1½			
1614	161406Y		1 * 1 ⊡			
1614	161407Y		1¼ * 1¼ ⊡			
1614	161408Y		1½ * 1½ ⊡			

Material: *Polyamide*
Screws: Stainless steel
Nuts: Zinc plated steel

552 *Split idler sprocket, machined*

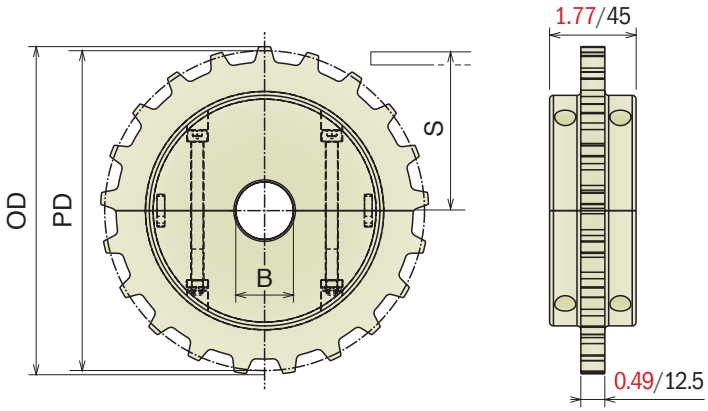

Part	Article-Nr.	Z-	Bore in	PD in-mm	OD in-mm	S in-mm
1611	161150	16	0.71*	5.12/130,2	5.14/130,6	2.31/58,7
1611	161151Y		1			
1611	161152Y		1¼			
1611	161153Y		1 7/16			
1611	161154Y		1½			
1612	161250	18	0.71*	5.76/146,3	5.78/146,9	2.63/66,8
1612	161251Y		1			
1612	161252Y		1¼			
1612	161253Y		1 7/16			
1612	161254Y		1½			
1613	161350	21	0.71*	6.71/170,4	6.72/170,7	3.10/78,8
1613	161351Y		1			
1613	161352Y		1¼			
1613	161353Y		1 7/16			
1613	161354Y		1½			
1614	161450	25	0.71*	7.98/202,7	8.04/204,2	3.74/95,0
1614	161451Y		1			
1614	161452Y		1¼			
1614	161453Y		1 7/16			
1614	161454Y		1½			

Material: Polyamide
Screws: Stainless steel
Nuts: Zinc plated steel

260-261

Split drive sprocket, machined

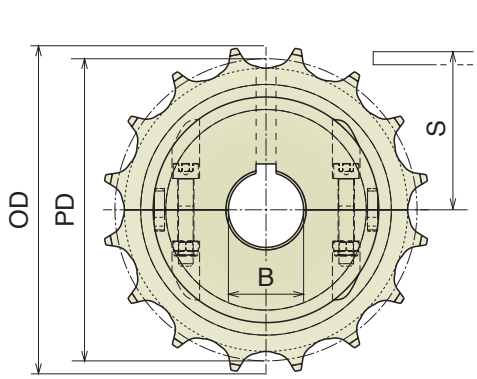

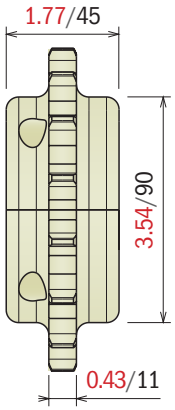

Part	Article-Nr.	Z-	Bore in	PD in-mm	OD in-mm	S in-mm
1541	154101Y	16	1	5.07/128,9	5.15/130,9	2.67/67,8
1541	154102Y		1¼			
1541	154103Y		1 7/16			
1541	154104Y		1½			
1542	154201Y	18	1	5.70/144,8	5.78/146,8	2.98/75,7
1542	154202Y		1¼			
1542	154203Y		1 7/16			
1542	154204Y		1½			
1543	154301Y	19	1	6.07/154,3	6.15/156,3	3.17/80,5
1543	154302Y		1¼			
1543	154303Y		1 7/16			
1543	154304Y		1½			

Split idler sprocket, machined

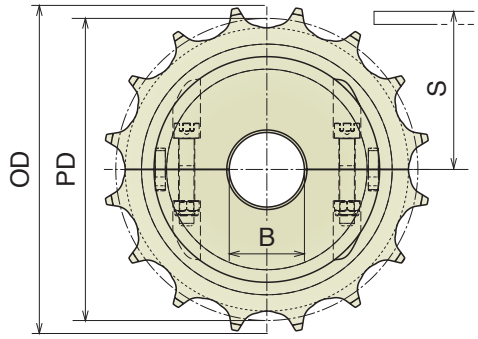

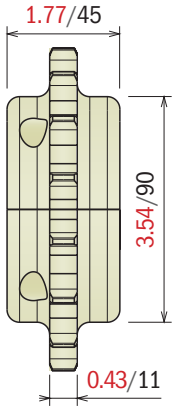

Part	Article-Nr.	Z-	Bore in	PD in-mm	OD in-mm	S in-mm
1541	154150	16	0.71*	5.07/128,9	5.15/130,9	2.67/67,8
1541	154151Y		1			
1541	154152Y		1¼			
1541	154153Y		1 7/16			
1541	154154Y		1½			
1542	154250	18	0.71*	5.70/144,8	5.78/146,8	2.98/75,7
1542	154251Y		1			
1542	154252Y		1¼			
1542	154253Y		1 7/16			
1542	154254Y		1½			
1543	154350	19	0.71*	6.07/154,3	6.15/156,3	3.17/80,5
1543	154351Y		1			
1543	154352Y		1¼			
1543	154353Y		1 7/16			
1543	154354Y		1½			

*Plain Bore

Material: Polyamide reinforced
Screws: Stainless steel
Nuts: Zinc plated steel

260-261

Split drive sprocket, molded

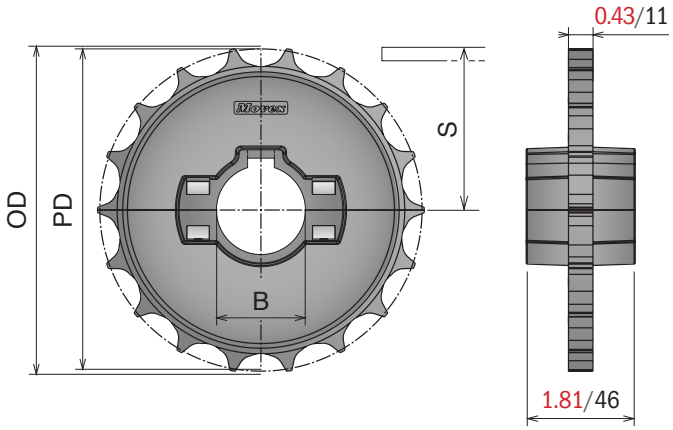

Part	Article-Nr.	Z-	Bore in	PD in-mm	OD in-mm	S in-mm
1545	154501Y	16	1	5.07/128,9	5.15/130,9	2.67/67,8
1545	154502Y		1¼			
1545	154503Y		1 7/16			
1545	154504Y		1½			
1545	154506Y		1 * 1 ◻			
1545	154507Y		1¼ * 1¼ ◻			
1545	154508Y		1½ * 1½ ◻			
1546	154601Y	18	1	5.70/144,8	5.78/146,8	2.98/75,7
1546	154602Y		1¼			
1546	154603Y		1 7/16			
1546	154604Y		1½			
1546	154606Y		1 * 1 ◻			
1546	154607Y		1¼ * 1¼ ◻			
1546	154608Y		1½ * 1½ ◻			
1547	154701Y	19	1	6.07/154,3	6.15/156,3	3.17/80,5
1547	154702Y		1¼			
1547	154703Y		1 7/16			
1547	154704Y		1½			
1547	154706Y		1 * 1 ◻			
1547	154707Y		1¼ * 1¼ ◻			
1547	154708Y		1½ * 1½ ◻			

Split idler sprocket, molded

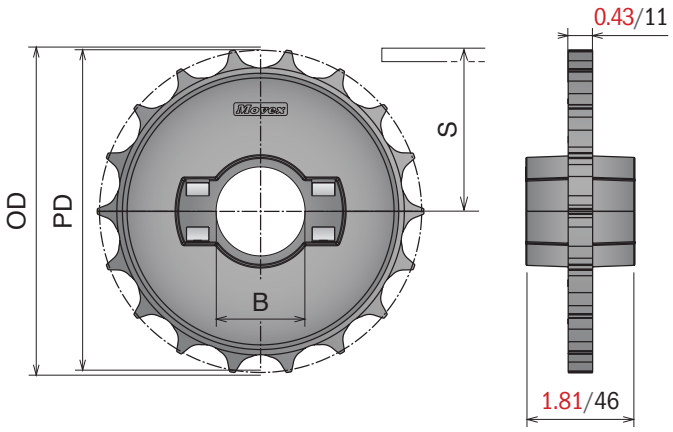

Part	Article-Nr.	Z-	Bore in	PD in-mm	OD in-mm	S in-mm
1545	154551Y	16	1	5.07/128,9	5.15/130,9	2.67/67,8
1545	154552Y		1¼			
1545	154553Y		1 7/16			
1545	154554Y		1½			
1546	154651Y	18	1	5.70/144,8	5.78/146,8	2.98/75,7
1546	154652Y		1¼			
1546	154653Y		1 7/16			
1546	154654Y		1½			
1547	154751Y	19	1	6.07/154,3	6.15/156,3	3.17/80,5
1547	154752Y		1¼			
1547	154753Y		1 7/16			
1547	154754Y		1½			

Material: Polyamide
Screws: Stainless steel
Nuts: Zinc plated steel

556

Split drive sprocket, machined

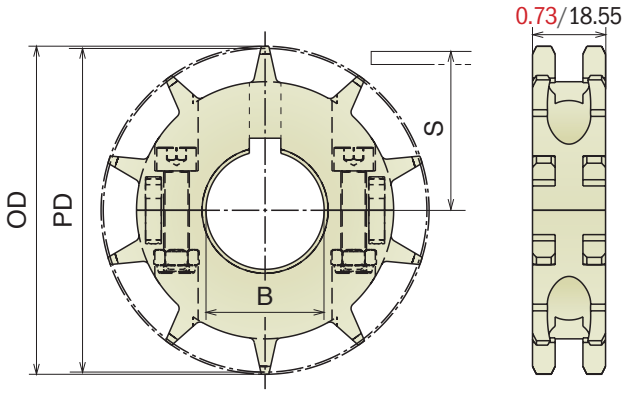

Part	Article-Nr.	Z-	Bore in	PD in-mm	OD in-mm	S in-mm
1620	162001Y	10	1	3.24/82,2	3.28/83,3	1.30/33,0
1620	162002Y		1¼			
1620	162003YE		1 7/16			
1620	162004YE		1½			
1620	162006Y		1 * 1			
1620	162007Y		1¼ * 1¼			
1620	162008YE		1½ * 1½			
1621	162101Y	12	1	3.86/98,1	3.94/100,0	1.61/41,0
1621	162102Y		1¼			
1621	162103Y		1 7/16			
1621	162104Y		1½			
1621	162106Y		1 * 1			
1621	162107Y		1¼ * 1¼			
1621	162108YE		1½ * 1½			
1622	162201Y	15	1	4.81/122,2	4.89/124,3	2.09/53,0
1622	162202Y		1¼			
1622	162203Y		1 7/16			
1622	162204Y		1½			
1622	162206Y		1 * 1			
1622	162207Y		1¼ * 1¼			
1622	162308Y		1½ * 1½			
1623	162301Y	18	1	5.76/146,3	5.82/147,8	2.56/65,0
1623	162302Y		1¼			
1623	162303Y		1 7/16			
1623	162304Y		1½			
1623	162306Y		1 * 1			
1623	162307Y		1¼ * 1¼			
1623	162308Y		1½ * 1½			

Split idler sprocket, machined

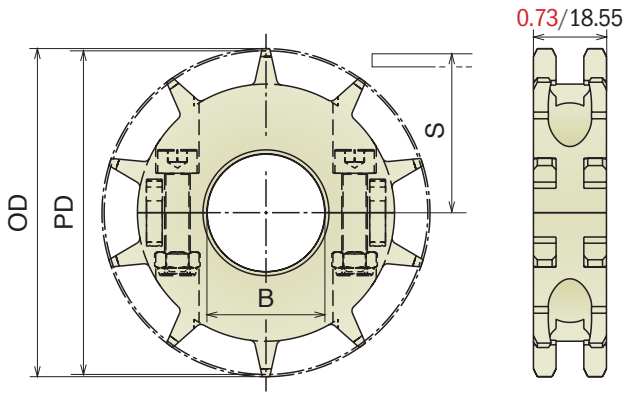

Part	Article-Nr.	Z-	Bore in	PD in-mm	OD in-mm	S in-mm
1620	162050	10	0.71*	3.24/82,2	3.28/83,3	1.30/33,0
1620	162051Y		1			
1620	162052Y		1¼			
1620	162053YE		1 7/16			
1620	162054YE		1½			
1621	162150	12	0.71*	3.86/98,1	3.94/100,0	1.61/41,0
1621	162151Y		1			
1621	162152Y		1¼			
1621	162153Y		1 7/16			
1621	162154Y		1½			
1622	162250	15	0.71*	4.81/122,2	4.89/124,3	2.09/53,0
1622	162251Y		1			
1622	162252Y		1¼			
1622	162253Y		1 7/16			
1622	162254Y		1½			
1623	162350	18	0.71*	5.76/146,3	5.82/147,8	2.56/65,0
1623	162351Y		1			
1623	162352Y		1¼			
1623	162353Y		1 7/16			
1623	162354Y		1½			

Material: *Polyamide*
Screws: Stainless steel
Nuts: Zinc plated steel

600

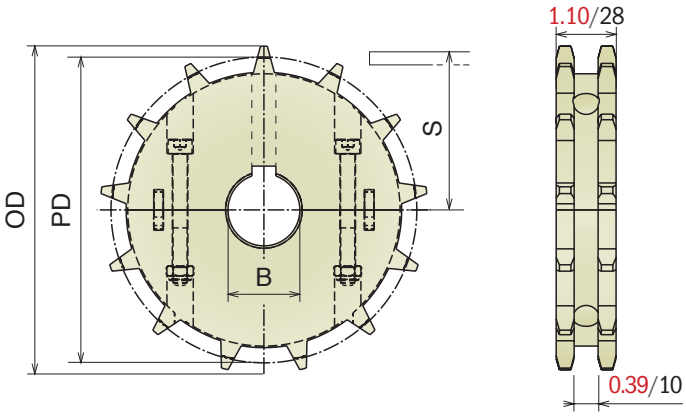

Part	Article-Nr.	Z-	Bore in	PD in-mm	OD in-mm	S in-mm
1571	157101Y	10	1	4.05/102,8	4.24/107,7	1.77/45,0
1571	157102Y		1¼			
1571	157103Y		1 7/16			
1571	157104Y		1½			
1572	157201Y	13	1	5.22/132,7	5.46/138,8	2.36/60,0
1572	157202Y		1¼			
1572	157203Y		1 7/16			
1572	157204Y		1½			
1573	157301Y	15	1	6.01/152,7	6.27/159,4	2.75/70,0
1573	157302Y		1¼			
1573	157303Y		1 7/16			
1573	157304Y		1½			
1574	157401Y	16	1	6.41/162,8	6.68/169,6	2.95/75,0
1574	157402Y		1¼			
1574	157403Y		1 7/16			
1574	157404Y		1½			

Split idler sprocket, machined

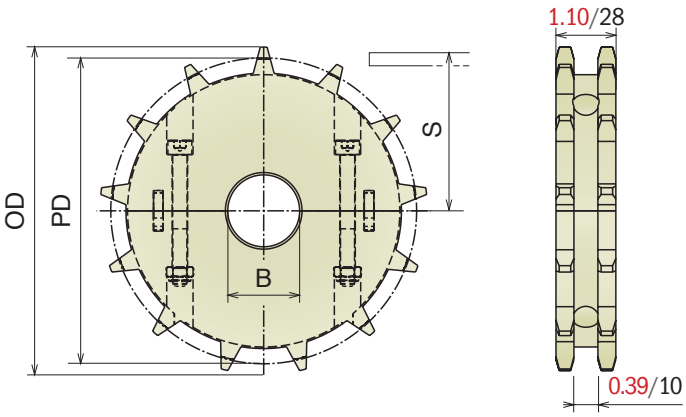

Part	Article-Nr.	Z-	Bore in	PD in-mm	OD in-mm	S in-mm
1571	157150	10	0.71*	4.05/102,8	4.24/107,7	1.77/45,0
1571	157151Y		1			
1571	157152Y		1¼			
1571	157153Y		1 7/16			
1571	157154Y		1½			
1572	157250	13	0.71*	5.22/132,7	5.46/138,8	2.36/60,0
1572	157251Y		1			
1572	157252Y		1¼			
1572	157253Y		1 7/16			
1572	157254Y		1½			
1573	157350	15	0.71*	6.01/152,7	6.27/159,4	2.75/70,0
1573	157351Y		1			
1573	157352Y		1¼			
1573	157353Y		1 7/16			
1573	157354Y		1½			
1574	157450	16	0.71*	6.41/162,8	6.68/169,6	2.95/75,0
1574	157451Y		1			
1574	157452Y		1¼			
1574	157453Y		1 7/16			
1574	157454Y		1½			

*Plain Bore

Material: *Machined: Acetal resin*
Screws: Stainless steel
Nuts: Zinc plated steel

500 RR

Drive sprocket, molded

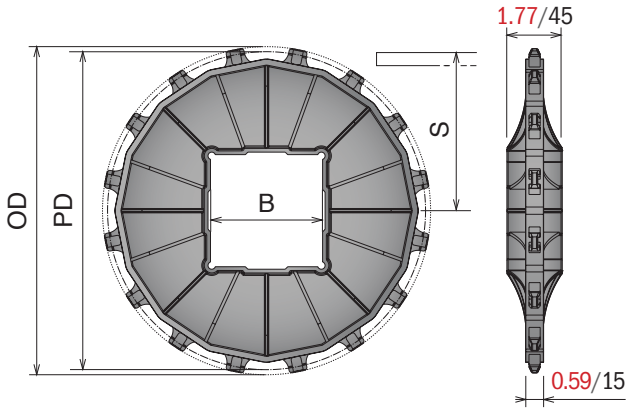

Part	Article-Nr.	Z-	Bore in	PD in-mm	OD in-mm	S in-mm
1551	155104	10	Ø40	6.47/164,4	6.42/163,1	2.92/74,2
1551	155105		Ø50			
1551	155106		40x40			
1551	155107		60x60			
1551	155108		65x65			
1552	155204	12	Ø40	7.73/196,3	7.73/196,3	3.55/90,1
1552	155206		40x40			
1552	155207		60x60			
1552	155208		65x65			
1553	155311	13	Ø65	8.36/212,3	8.23/209,0	3.86/98,1
1553	155310		Ø90			
1553	155306		40x40			
1553	155307		60x60			
1553	155308		65x65			
1553	155309		90x90			
1559	155910	16	Ø90	10.25/260,4	10.31/262,0	4.81/122,3
1559	155905		Ø2,5”			
1559	155908		65x65			
1559	155909		90x90			
1559	155912		120x120			

Drive sprocket, machined

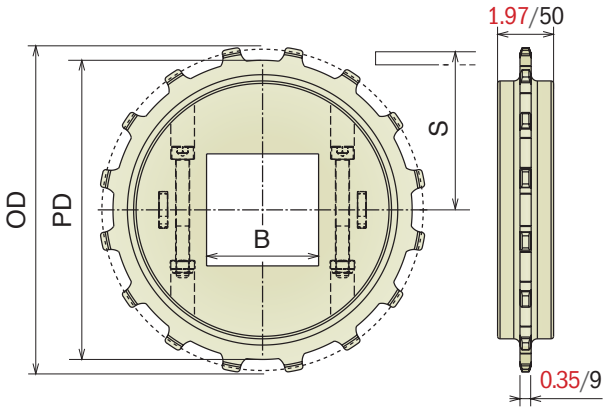

Part	Article-Nr.	Z-	Bore in	PD in-mm	OD in-mm	S in-mm
1607	160704	10	Ø40	6.47/164,4	6.42/163,1	2.92/74,2
1607	160705		Ø50			
1607	160706		40x40			
1607	160707		60x60			
1607	160708		65x65			
1608	160804	12	Ø40	7.73/196,3	7.73/196,3	3.55/90,1
1608	160806		40x40			
1608	160807		60x60			
1608	160808		65x65			
1609	160911	13	Ø65	8.36/212,3	8.23/209,0	3.86/98,1
1609	160910		Ø90			
1609	160906		40x40			
1609	160907		60x60			
1609	160908		65x65			
1609	160909		90x90			
1610	161010	16	Ø90	10.25/260,4	10.31/262,0	4.81/122,3
1610	161005		Ø2,5”			
1610	161008		65x65			
1610	161009		90x90			
1610	161012		120x120			

Material: *Machined: Acetal resin*
Screws: Stainless steel
Nuts: Zinc plated steel

500 RR *Split Version*

Drive sprocket, molded

Part	Article-Nr.	Z-	Bore in
1558	**155809**	16	Ø 90 x 90
1558	**155810**	16	Ø 90 with double keyway

New

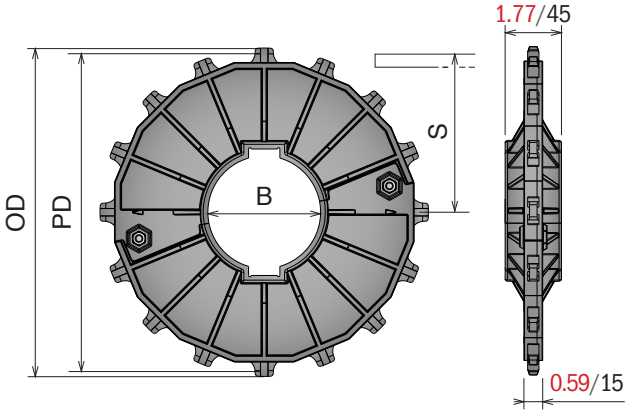

BluLub®

Enhanced – Performance – UHMW-PE

BluLub *is a new high-performance compounded UHMW-PE material with the latest generation of solid lubricants.* ***BluLub*** *contributes to improve PV-properties compared to standard UHMW-PE, especially in applications with limited lubrication, higher speeds and/or higher loads.* ***BluLub*** *requires less energy and with the lower coefficient of friction, improves the product stability and wear life of chains and modular belts.*

Properties:

- ***UHMW-PE Polyethylene with molecular density 5,600,000 g/mol or 9,200,000 g/mol.***
- ***Operating temperature: -40 to 176°F (-40 to + 80°C)***
- ***BluLub complies with the Code of Federal Regulations of FDA***

Advantages:

- ***Running dry***
- ***High speed***
- ***Reduced noise and squeaking***
- ***Lower Coefficient of Friction***
- ***Lower wear***
- ***Less energy consumption***
- ***Minimal moisture absorption***
- ***Smooth and quite chain running***

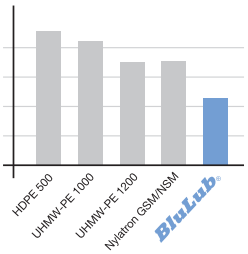

Coefficient of friction
(average)

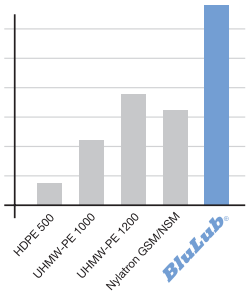

Relative wearlife

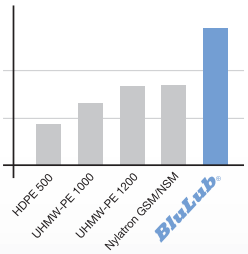

Max speed
max. recommended surface speed (dry-acetal LF chain)

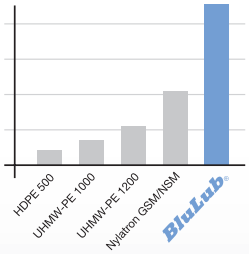

PV-limit

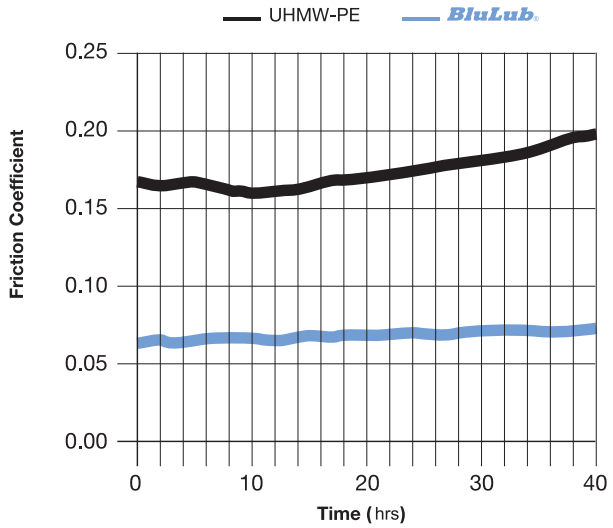

Less Friction Compared to UHMW-PE

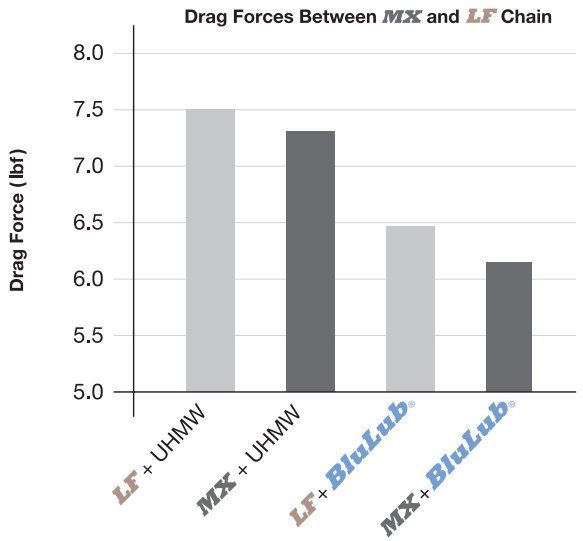

Chain / Wear Strip Configuration

Movex®

197

Profiles

101 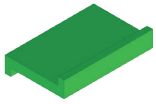 Pag 200

102 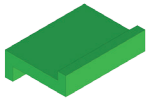 Pag 200

176 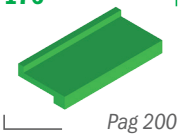 Pag 200

103 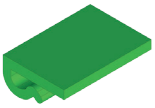 Pag 201

104 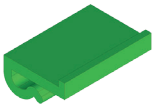 Pag 201

179 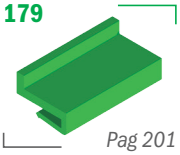 Pag 201

175 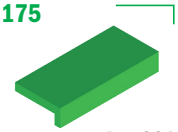 Pag 201

1038 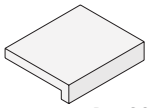 Pag 202

150 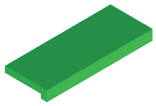 Pag 202

1058 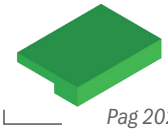 Pag 202

174 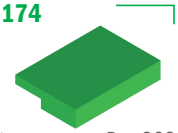 Pag 202

1014 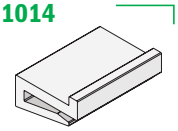 Pag 203

1015 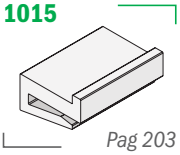 Pag 203

1016 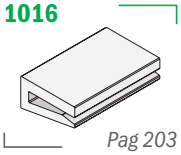 Pag 203

1017 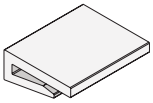 Pag 203

1018 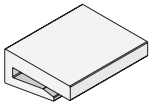 Pag 204

1019 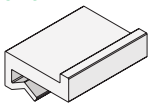 Pag 204

1020 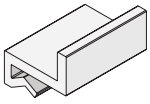 Pag 204

1021 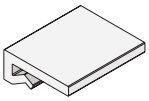 Pag 205

1022 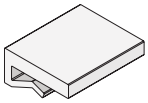 Pag 205

1023 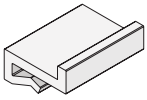 Pag 205

1024 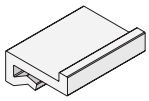 Pag 205

1025 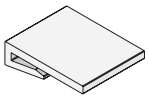 Pag 206

1026 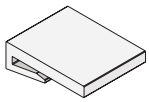 Pag 206

1027 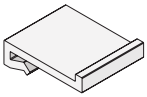 Pag 206

1028 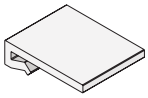 Pag 206

1046 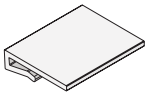 Pag 206

1029 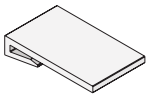 Pag 207

1030 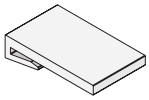 Pag 207

1031 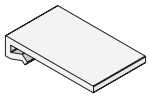 Pag 207

1032 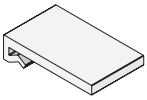 Pag 207

1033 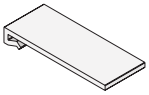 Pag 208

1034 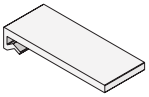 Pag 208

1035 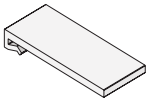 Pag 208

105 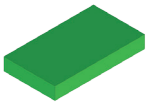 Pag 209

106 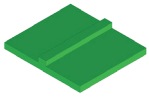 Pag 209

107 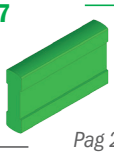 Pag 209

108 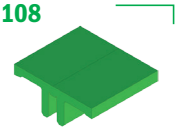 Pag 209

109 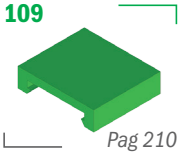 Pag 210

110 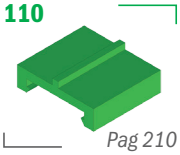 Pag 210

156 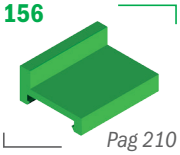 Pag 210

112 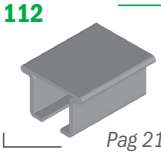 Pag 211

147 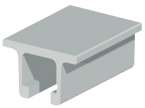 Pag 211

133 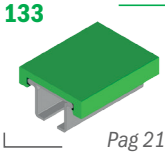 Pag 211

148 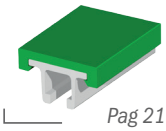 Pag 211

157 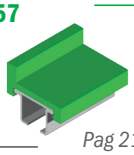 Pag 212

118 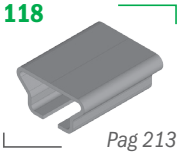 Pag 213

149 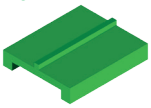 Pag 213

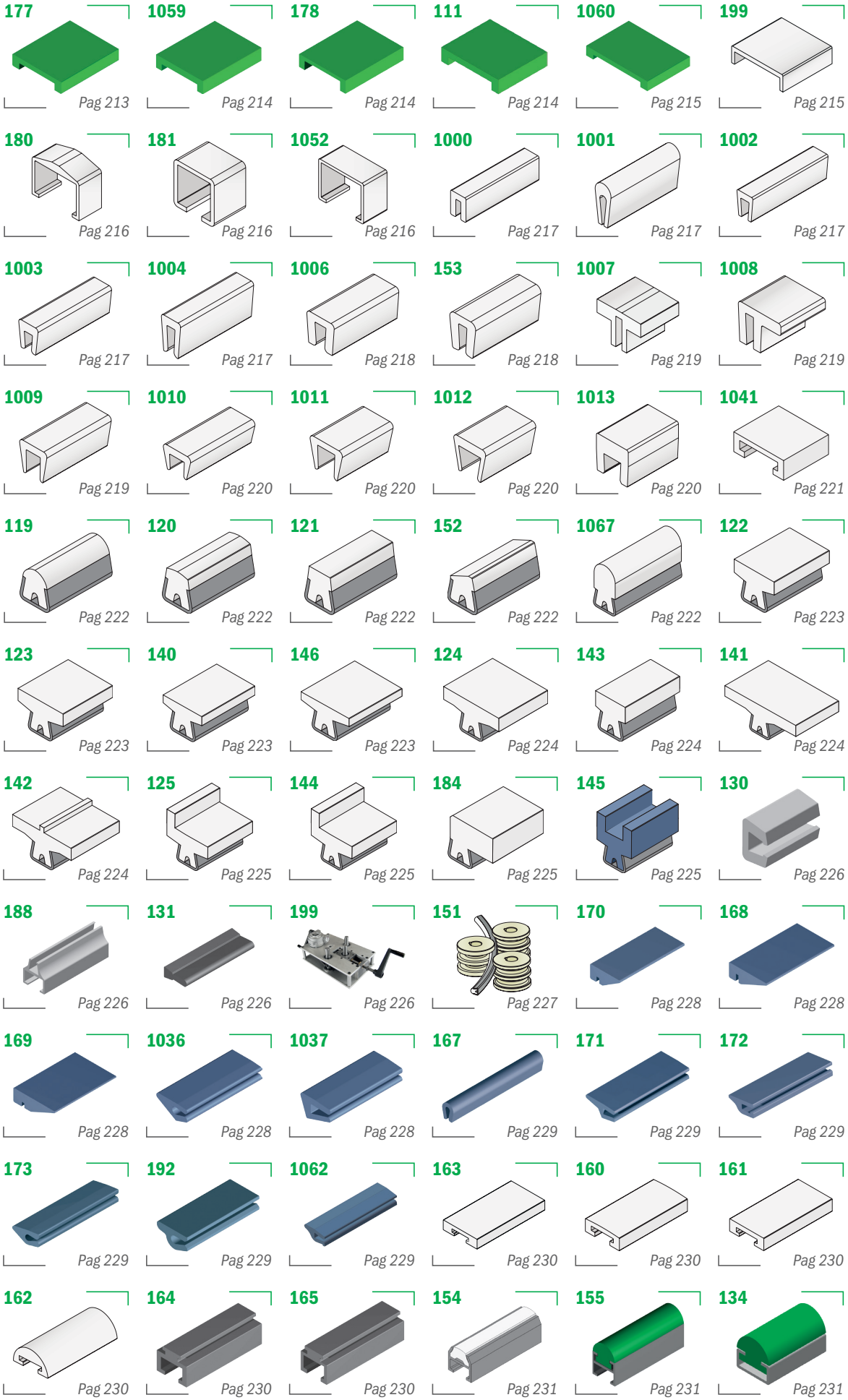
177
Pag 213
1059
Pag 214
178
Pag 214
111
Pag 214
1060
Pag 215
199
Pag 215
180
Pag 216
181
Pag 216
1052
Pag 216
1000
Pag 217
1001
Pag 217
1002
Pag 217
1003
Pag 217
1004
Pag 217
1006
Pag 218
153
Pag 218
1007
Pag 219
1008
Pag 219
1009
Pag 219
1010
Pag 220
1011
Pag 220
1012
Pag 220
1013
Pag 220
1041
Pag 221
119
Pag 222
120
Pag 222
121
Pag 222
152
Pag 222
1067
Pag 222
122
Pag 223
123
Pag 223
140
Pag 223
146
Pag 223
124
Pag 224
143
Pag 224
141
Pag 224
142
Pag 224
125
Pag 225
144
Pag 225
184
Pag 225
145
Pag 225
130
Pag 226
188
Pag 226
131
Pag 226
199
Pag 226
151
Pag 227
170
Pag 228
168
Pag 228
169
Pag 228
1036
Pag 228
1037
Pag 228
167
Pag 229
171
Pag 229
172
Pag 229
173
Pag 229
192
Pag 229
1062
Pag 229
163
Pag 230
160
Pag 230
161
Pag 230
162
Pag 230
164
Pag 230
165
Pag 230
154
Pag 231
155
Pag 231
134
Pag 231

Profiles

1041
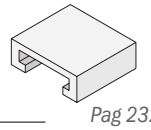
Pag 232

1042
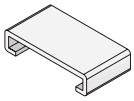
Pag 232

1043
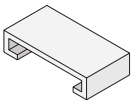
Pag 232

1044
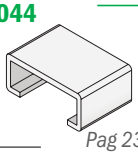
Pag 233

1045
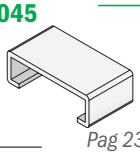
Pag 233

1053
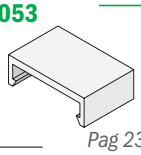
Pag 233

1054
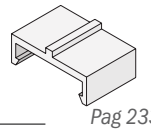
Pag 233

135
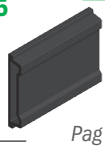
Pag 234

136
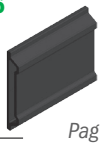
Pag 234

137
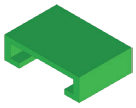
Pag 235

117
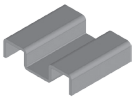
Pag 236

1055
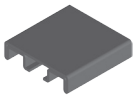
Pag 236

159
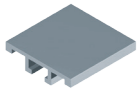
Pag 236

1063

Pag 237

1064

Pag 237

158

Pag 238

158

Pag 238

182

Pag 239

1065

Pag 239

189

Pag 240

189

Pag 240

193

Pag 241

187

Pag 241

1056
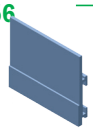
Pag 242

1057
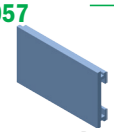
Pag 242

186
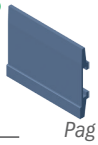
Pag 243

1061
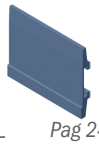
Pag 243

166
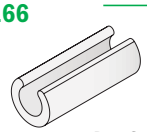
Pag 244

1039
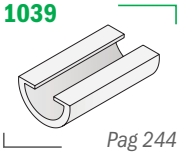
Pag 244

183
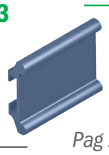
Pag 244

113

Pag 245

113

Pag 245

114

Pag 245

116

Pag 246

116

Pag 246

115

Pag 246

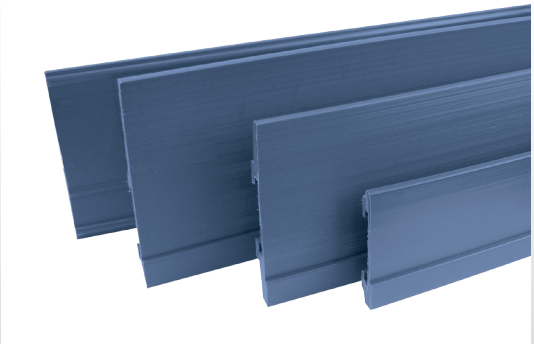

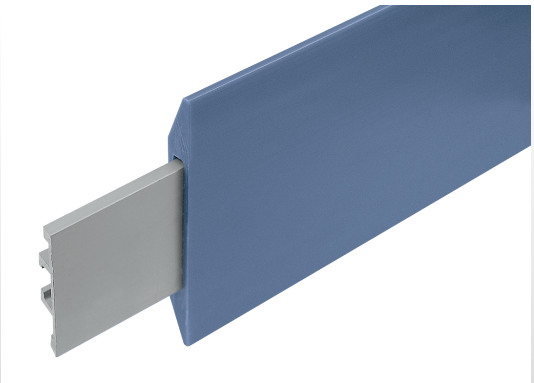

Material:
Polyethylene UHMW-PE with molecular density 5,600,000 g/mol
Linear expansion coefficient: 1.1×10^{-4} °F^{-1} (2×10^{-4} °C^{-1})
Operating temperature: -40 to 176°F (-40 to +80°C)

101 *Z-Profile*

On request available in white color

Part	Article-Nr.	Colour	Availability
101	10101	black	Stock item
101	10102	green	Stock item

200 ft

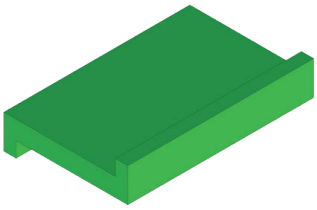

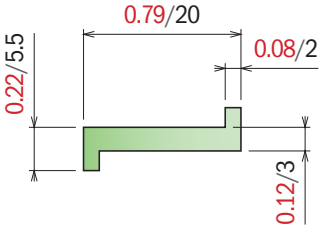

102 *Z-Profile reinforced*

On request available in white color

Part	Article-Nr.	Colour	Availability
102	10201	black	Stock item
102	10202	green	Stock item

200 ft

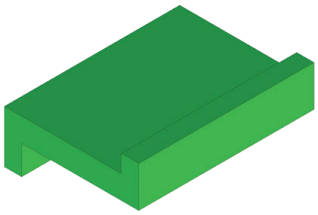

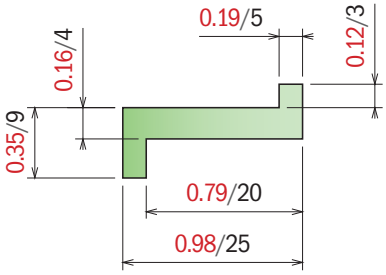

Part	Article-Nr.	Colour	Availability
102	10299B	BluLub	Stock item

200 ft

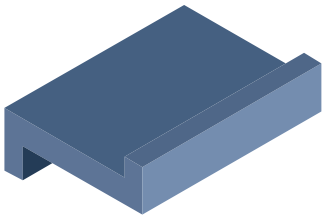

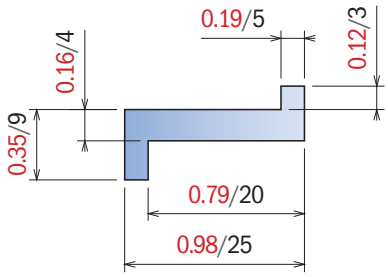

176 *Z-Profile*

On request available in white color

Part	Article-Nr.	Colour	Availability
176	17601	black	Stock item
176	17602	green	Stock item

200 ft

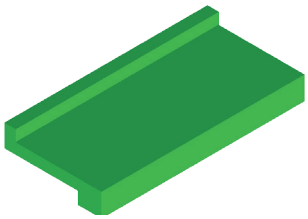

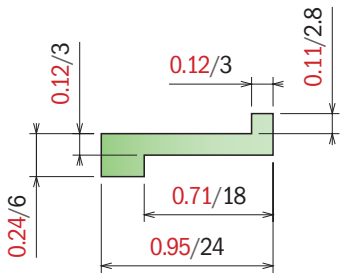

Material:
Polyethylene UHMW-PE with molecular density 5,600,000 g/mol
Linear expansion coefficient: 1.1x10^{-4} °F^{-1} (2x10^{-4} °C^{-1})
Operating temperature: -40 to 176°F (-40 to +80°C)

103 *Z-clip profile without nose*

Fit on 2,5 to 3,5 mm

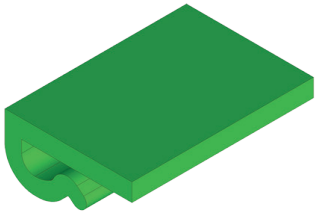

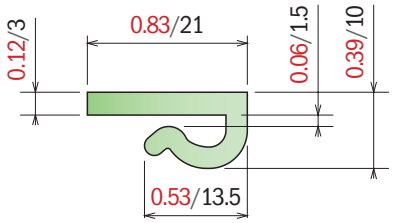

Part	Article-Nr.	Colour	Availability
103	10301	black	Stock item
103	10302	green	Stock item
103	10303	white	Stock item
103	10300B-30	BluLub	Stock item

100 ft

200 ft

104 *Z-clip profile with nose*

Fit on 2,5 to 3,5 mm

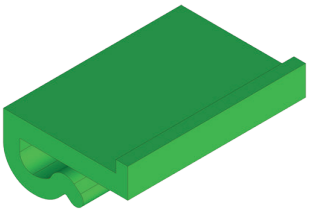

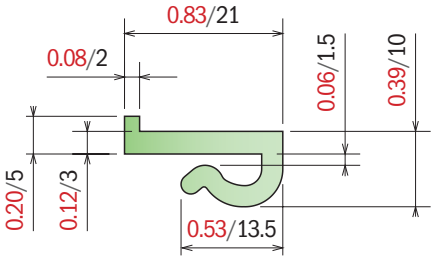

Part	Article-Nr.	Colour	Availability
104	10401	black	Stock item
104	10402	green	Stock item
104	10403	white	Stock item

200 ft

179 *Z-clip profile with nose*

On request available in white color | **Fit on 2,5 to 3,5 mm**

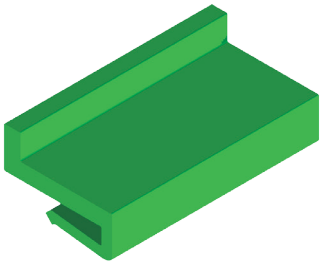

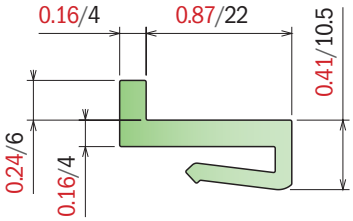

Part	Article-Nr.	L	Colour	Availability
179	17901C	10 ft	black	Stock item
179	17901	20 ft	black	On request
179	17902C	10 ft	green	Stock item
179	17902	20 ft	green	On request
179	17902-60	200 ft	green	Stock item

200 ft

10/20 ft

175 *L-Profile*

On request available in white color

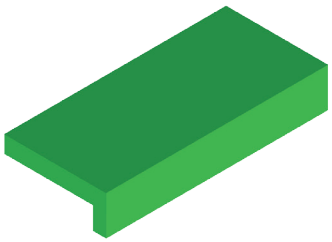

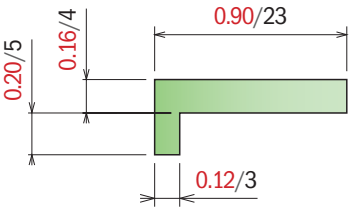

Part	Article-Nr.	Colour	Availability
175	17501	black	Stock item
175	17502	green	Stock item

200 ft

Material:
Polyethylene UHMW-PE with molecular density 5,600,000 g/mol
Linear expansion coefficient: 1.1×10^{-4} °F^{-1} (2×10^{-4} °C^{-1})
Operating temperature: -40 to 176°F (-40 to +80°C)

1038 *L-Profile*

Part	Article-Nr.	L	Colour	Availability
1038	103803	200 ft	white	On request

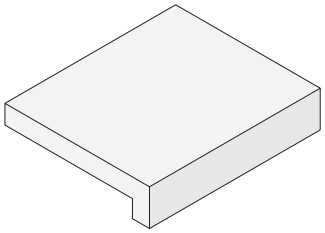

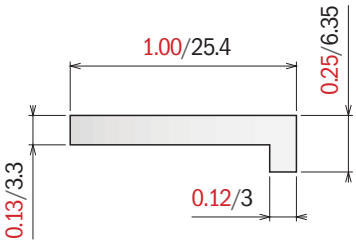

200 ft

150 *L-Profile*

On request available in white color

Part	Article-Nr.	Colour	Availability
150	15001	black	Stock item
150	15002	green	Stock item

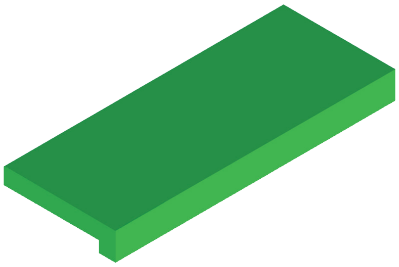

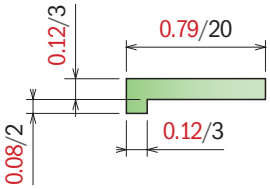

200 ft

1058 *L-Profile*

Part	Article-Nr.	L	Colour	Availability
1058	105801C	10 ft	black	Stock item
1058	105801	20 ft	black	On request
1058	105802C	10 ft	green	Stock item
1058	105802	20 ft	green	On request

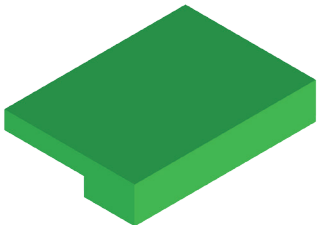

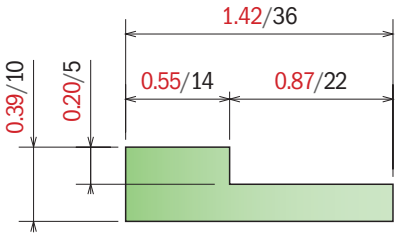

10/20 ft

174 *L-Profile*

On request available in white color

Part	Article-Nr.	L	Colour	Availability
174	17401C	10 ft	black	Stock item
174	17401	20 ft	black	On request
174	17402C	10 ft	green	Stock item
174	17402	20 ft	green	On request

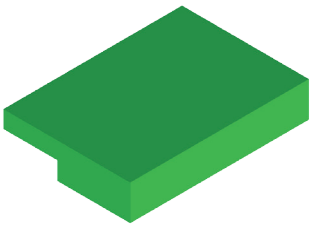

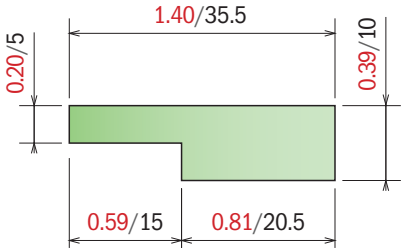

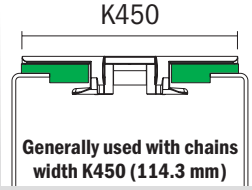

Generally used with chains width K450 (114.3 mm)

10/20 ft

Material:
Polyethylene UHMW-PE with molecular density 5,600,000 g/mol
Linear expansion coefficient: 1.1x10^{-4} °F^{-1} (2x10^{-4} °C^{-1})
Operating temperature: -40 to 176°F (-40 to +80°C)

1014

J-Leg Profile 3/4"

Fit on 1/8 Bar (3 mm) or 11 ga / 12 ga

Part	Article-Nr.	L	Colour	Availability
1014	101403C	10 ft	white	On request
1014	101403	20 ft	white	On request

10/20 ft

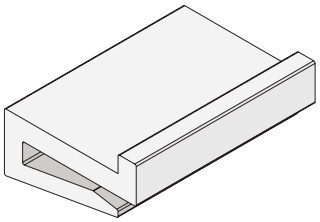

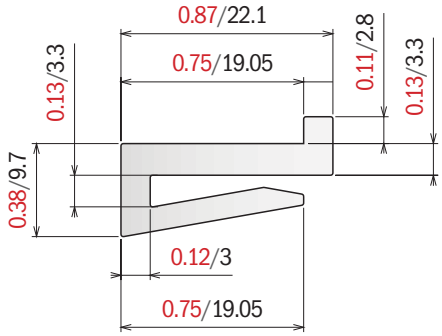

1015

J-Leg Profile 3/4"

Fit on 1/8 Bar (3 mm) or 11 ga / 12 ga

Part	Article-Nr.	L	Colour	Availability
1015	101503C	10 ft	white	On request
1015	101503	20 ft	white	On request

10/20 ft

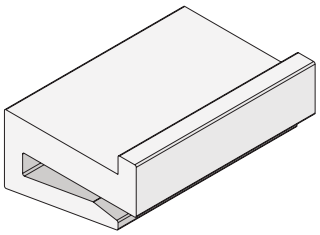

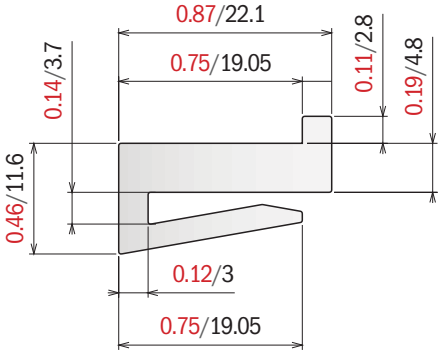

1016

J-Leg Profile 3/4"

Fit on 1/8 Bar (3 mm) or 11 ga / 12 ga

Part	Article-Nr.	L	Colour	Availability
1016	101603C	10 ft	white	On request
1016	101603	20 ft	white	On request
1016	101603-30	100 ft	white	On request

10/20 ft

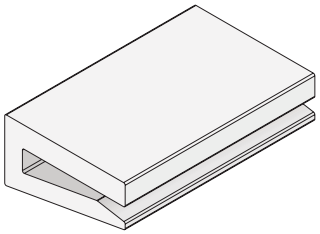

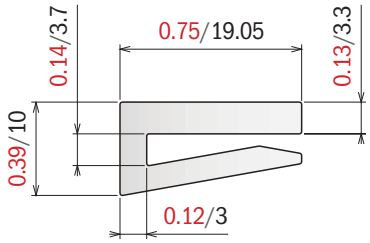

1017

J-Leg Profile 1"

Fit on 1/8 Bar (3 mm) or 11 ga / 12 ga

Part	Article-Nr.	L	Colour	Availability
1017	101703C	10 ft	white	On request
1017	101703	20 ft	white	On request
1017	101703-30	100 ft	white	On request

100 ft

10/20 ft

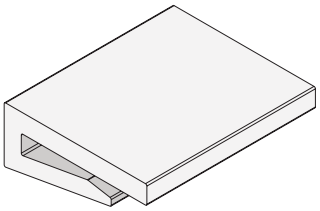

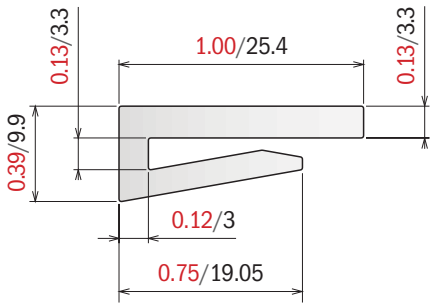

Material:
Polyethylene UHMW-PE with molecular density 5,600,000 g/mol
Linear expansion coefficient: 1.1x10^{-4} °F^{-1} (2x10^{-4} °C^{-1})
Operating temperature: -40 to 176°F (-40 to +80°C)

1018

J-Leg Profile 1"

Fit on 1/8 Bar (3 mm) or 11 ga / 12 ga

Part	Article-Nr.	L	Colour	Availability
1018	101803C	10 ft	white	On request
1018	101803	20 ft	white	On request

10/20 ft

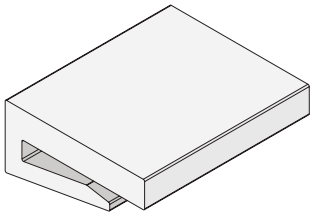

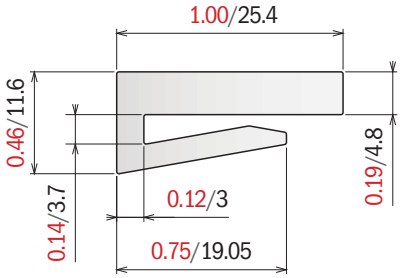

1019

J-Leg Profile 1"

Fit on 1/8 Bar (3 mm) or 11 ga / 12 ga

Part	Article-Nr.	L	Colour	Availability
1019	101903C	10 ft	white	On request
1019	101903	20 ft	white	On request

10/20 ft

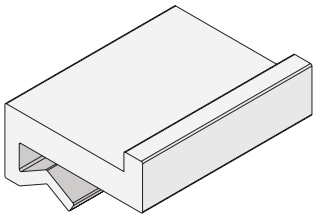

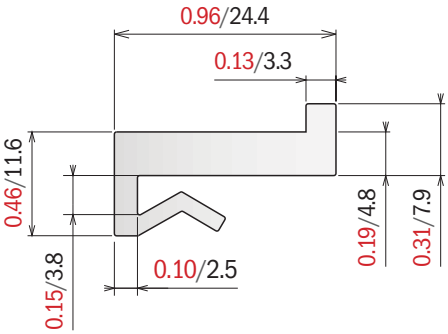

1020

J-Leg Profile 1"

Fit on 1/8 Bar (3 mm) or 11 ga / 12 ga

Part	Article-Nr.	L	Colour	Availability
1020	102003C	10 ft	white	On request
1020	102003	20 ft	white	On request

10/20 ft

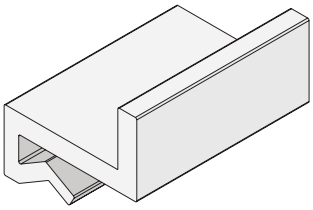

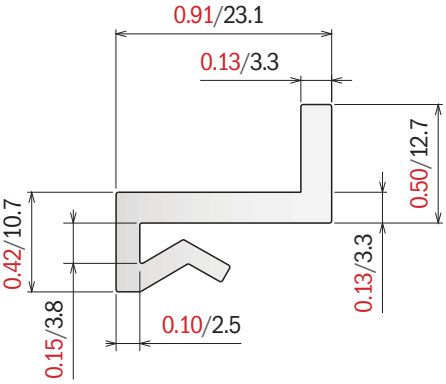

Material:
Polyethylene UHMW-PE with molecular density 5,600,000 g/mol
Linear expansion coefficient: 1.1×10^{-4} °F^{-1} (2×10^{-4} °C^{-1})
Operating temperature: -40 to 176°F (-40 to +80°C)

1021

J-Leg Profile 1"

Fit on 1/8 Bar (3 mm) or 11 ga / 12 ga

Part	Article-Nr.	L	Colour	Availability
1021	102103C	10 ft	white	On request
1021	102103	20 ft	white	On request
1021	102103-30	100 ft	white	On request
1021	102103-75	250 ft	white	On request

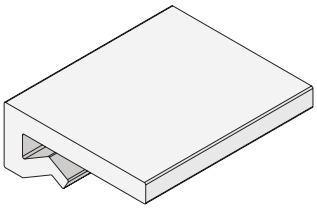

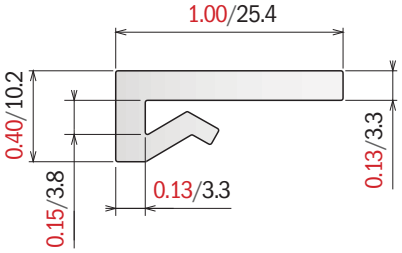

100 ft/ 250 ft | 10/20 ft

1022

J-Leg Profile 1"

Fit on 1/8 Bar (3 mm) or 11 ga / 12 ga

Part	Article-Nr.	L	Colour	Availability
1022	102203C	10 ft	white	On request
1022	102203	20 ft	white	On request
1022	102203-30	100 ft	white	On request

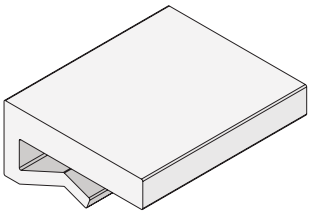

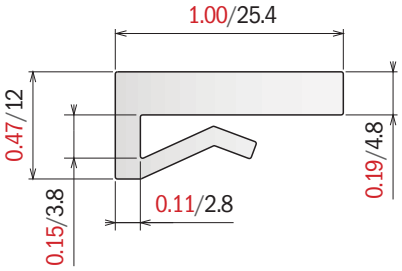

100 ft | 10/20 ft

1023

J-Leg Profile 1"

Fit on 1/8 Bar (3 mm) or 11 ga / 12 ga

Part	Article-Nr.	L	Colour	Availability
1023	102303C	10 ft	white	On request
1023	102303	20 ft	white	On request

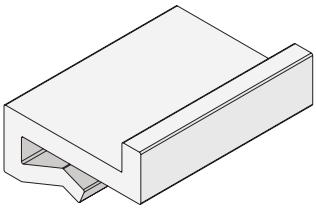

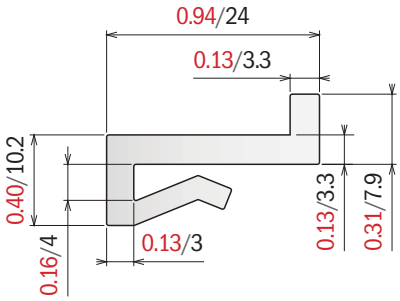

10/20 ft

1024

J-Leg Profile 1"

Fit on 1/8 Bar (3 mm) or 11 ga / 12 ga

Part	Article-Nr.	L	Colour	Availability
1024	102403C	10 ft	white	On request
1024	102403	20 ft	white	On request
1024	102403-30	100 ft	white	On request
1024	102402	20 ft	green	On request

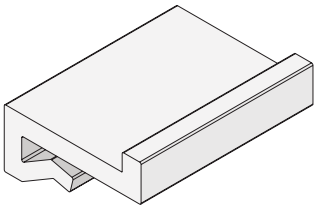

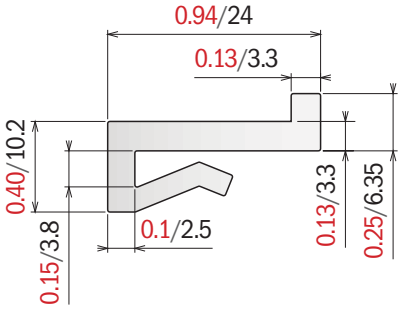

100 ft | 10/20 ft

Material:
Polyethylene UHMW-PE with molecular density 5,600,000 g/mol
Linear expansion coefficient: 1.1x10^{-4} °F^{-1} (2x10^{-4} °C^{-1})
Operating temperature: -40 to 176°F (-40 to +80°C)

1025

J-Leg Profile 1 1/2"

Fit on 1/8 Bar (3 mm) or 11 ga / 12 ga

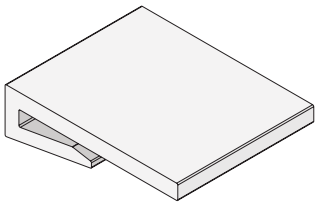

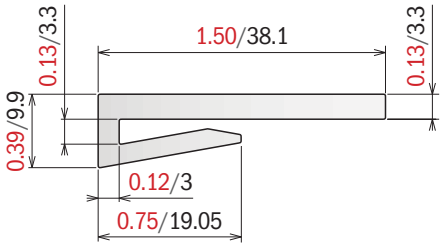

Part	Article-Nr.	L	Colour	Availability
1025	102503C	10 ft	white	On request
1025	102503	20 ft	white	On request
1025	102503-30	100 ft	white	On request

100 ft

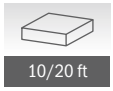
10/20 ft

1026

J-Leg Profile 1 1/2"

Fit on 1/8 Bar (3 mm) or 11 ga / 12 ga

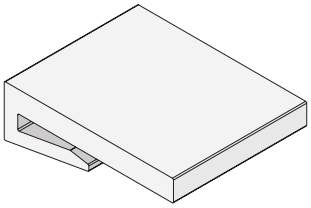

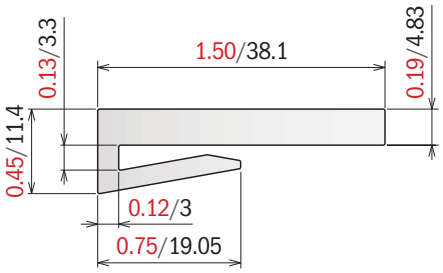

Part	Article-Nr.	L	Colour	Availability
1026	102603C	10 ft	white	On request
1026	102603	20 ft	white	On request

10/20 ft

1027

J-Leg Profile 1 1/2"

Fit on 1/8 Bar (3 mm) or 11 ga / 12 ga

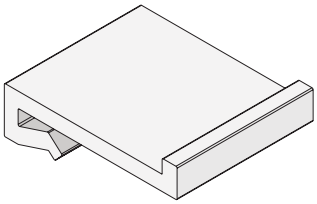

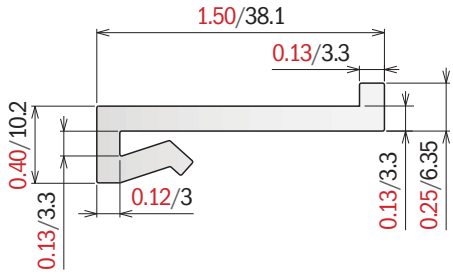

Part	Article-Nr.	L	Colour	Availability
1027	102703C	10 ft	white	On request
1027	102703	20 ft	white	On request

10/20 ft

1028

J-Leg Profile 1 1/2"

Fit on 1/8 Bar (3 mm) or 11 ga / 12 ga

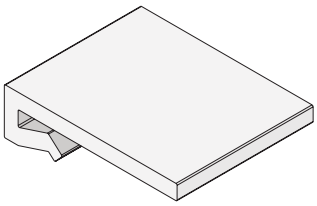

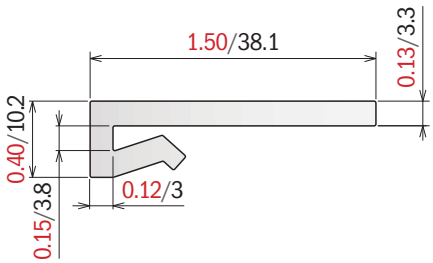

Part	Article-Nr.	L	Colour	Availability
1028	102803C	10 ft	white	On request
1028	102803	20 ft	white	On request

10/20 ft

1046

J-Leg Profile

Fit on 1/8 Bar (3 mm) or 11 ga / 12 ga

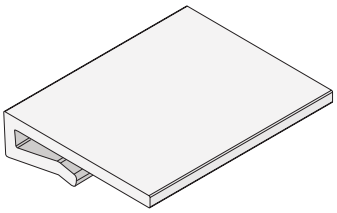

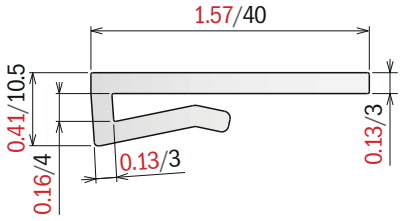

Part	Article-Nr.	L	Colour	Availability
1046	104602C	10 ft	green	On request
1046	104603C	10 ft	white	On request

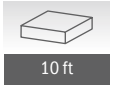
10 ft

Material:
Polyethylene UHMW-PE with molecular density 5,600,000 g/mol
Linear expansion coefficient: $1.1x10^{-4}$ °F^{-1} ($2x10^{-4}$ °C^{-1})
Operating temperature: -40 to 176°F (-40 to +80°C)

1029

J-Leg Profile 2"

Fit on 1/8 Bar (3 mm) or 11 ga / 12 ga

Part	Article-Nr.	L	Colour	Availability
1029	102903C	10 ft	white	On request
1029	102903	20 ft	white	On request

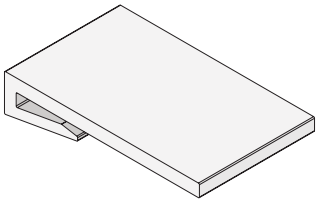

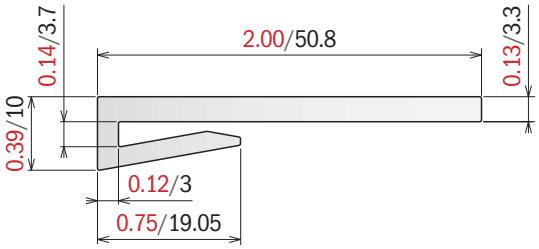

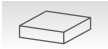
10/20 ft

1030

J-Leg Profile 2"

Fit on 1/8 Bar (3 mm) or 11 ga / 12 ga

Part	Article-Nr.	L	Colour	Availability
1030	103003C	10 ft	white	On request
1030	103003	20 ft	white	On request

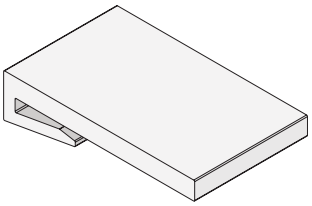

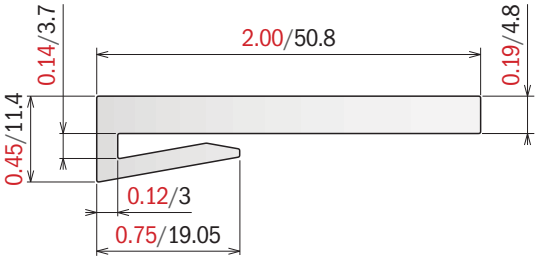

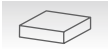
10/20 ft

1031

J-Leg Profile 2"

Fit on 1/8 Bar (3 mm) or 11 ga / 12 ga

Part	Article-Nr.	L	Colour	Availability
1031	103103C	10 ft	white	On request
1031	103103	20 ft	white	On request

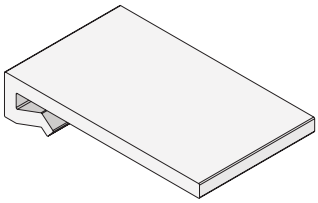

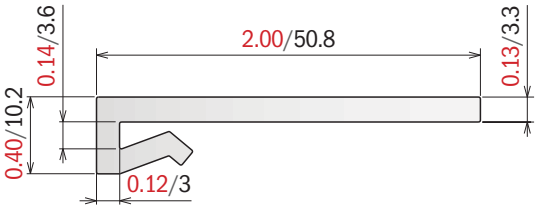

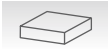
10/20 ft

1032

J-Leg Profile 2"

Fit on 1/8 Bar (3 mm) or 11 ga / 12 ga

Part	Article-Nr.	L	Colour	Availability
1032	103203C	10 ft	white	On request
1032	103203	20 ft	white	On request

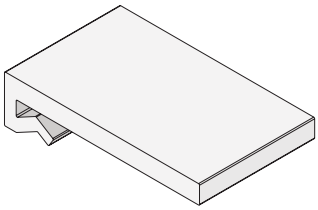

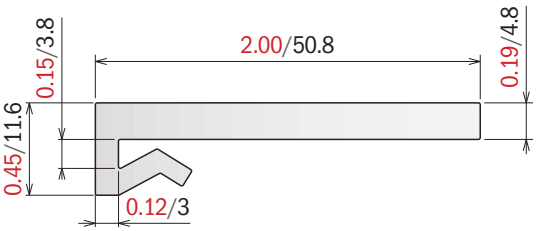

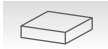
10/20 ft

Material:
Polyethylene UHMW-PE with molecular density 5,600,000 g/mol
Linear expansion coefficient: 1.1x10^{-4} °F^{-1} (2x10^{-4} °C^{-1})
Operating temperature: -40 to 176°F (-40 to +80°C)

1033

J-Leg Profile 3"

Fit on 1/8 Bar (3 mm) or 11 ga / 12 ga

Part	Article-Nr.	L	Colour	Availability
1033	103303C	10 ft	white	On request
1033	103303	20 ft	white	On request

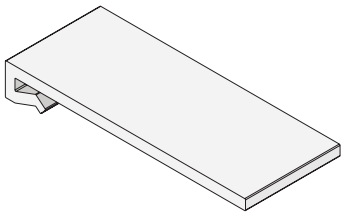

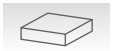

10/20 ft

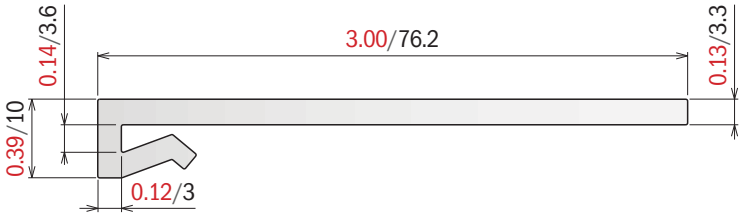

1034

J-Leg Profile 3"

Fit on 1/8 Bar (3 mm) or 11 ga / 12 ga

Part	Article-Nr.	L	Colour	Availability
1034	103403C	10 ft	white	On request
1034	103403	20 ft	white	On request

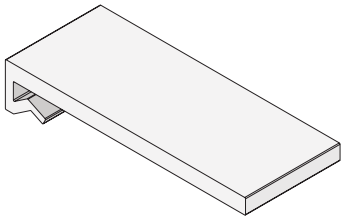

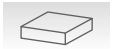

10/20 ft

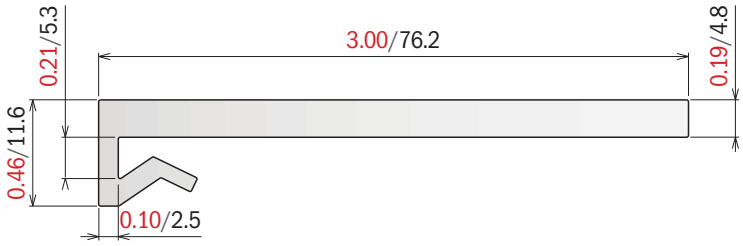

1035

J-Leg Profile 2 7/8"

Fit on 1/8 Bar (3 mm) or 11 ga / 12 ga

Part	Article-Nr.	L	Colour	Availability
1035	103503C	10 ft	white	On request
1035	103503	20 ft	white	On request

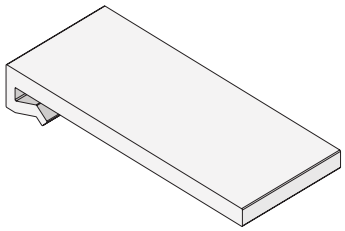

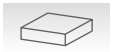

10/20 ft

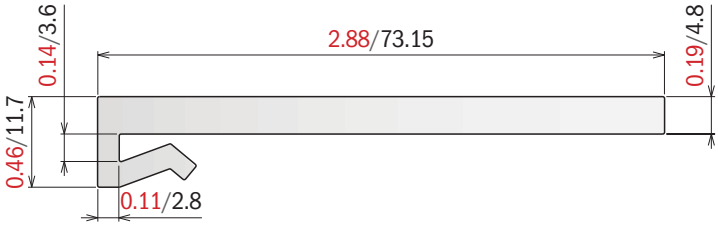

Material:
Polyethylene UHMW-PE with molecular density 5,600,000 g/mol
Linear expansion coefficient: 1.1x10^{-4} °F^{-1} (2x10^{-4} °C^{-1})
Operating temperature: -40 to 176°F (-40 to +80°C)

105 *Flat profile*

On request available in white color

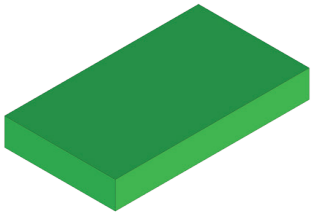

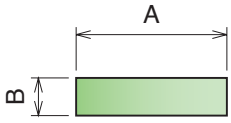

200 ft

Part	Article-Nr.	A in-mm	B in-mm	Colour	Availability
105	10501	0.79/20	0.12/3	black	Stock item
105	10502	0.79/20	0.12/3	green	Stock item
105	10503	0.79/20	0.20/5	black	Stock item
105	10504	0.79/20	0.20/5	green	Stock item
105	10595	0.98/25	0.12/3	green	Stock item
105	10592	1.18/30	0.12/3	green	On request
105	10594	1.18/30	0.20/5	green	On request
105	10596	1.57/40	0.12/3	green	Stock item
105	10597	1.97/50	0.12/3	green	On request
105	10505	2.36/60	0.12/3	black	Stock item
105	10506	2.36/60	0.12/3	green	Stock item
105	10507	2.75/70	0.12/3	black	Stock item
105	10508	2.75/70	0.12/3	green	Stock item
105	10509	3.93/100	0.12/3	black	On request
105	10510	3.93/100	0.12/3	green	Stock item

106 *Flat profile with nose*

On request available in white color

Part	Article-Nr.	Colour	Availability
106	10601	black	Stock item
106	10602	green	Stock item

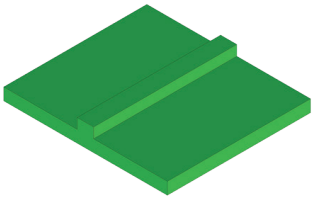

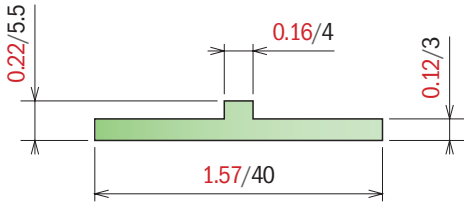

200 ft

107 *Wear strip*

On request available in white color

Part	Article-Nr.	Colour	Availability
107	10701	black	Stock item
107	10702	green	Stock item

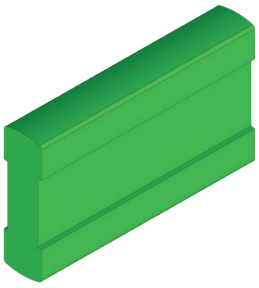

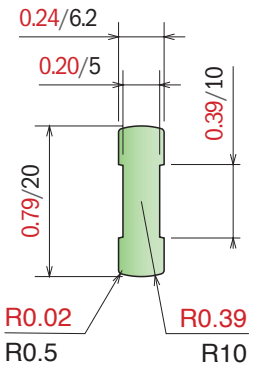

Supports Available:
PART 230-231
Pag 258

200 ft

108 *T-profile*

On request available in white color | Fit on 4 mm

Part	Article-Nr.	L	Colour	Availability
108	10801C	10 ft	black	Stock item
108	10801	20 ft	black	On request
108	10802C	10 ft	green	Stock item
108	10802	20 ft	green	On request

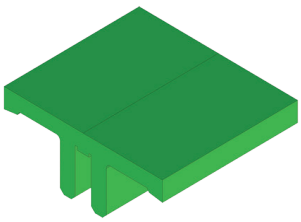

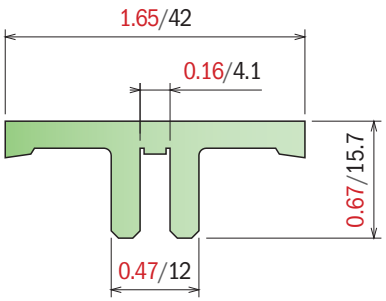

10/20 ft

Material:
Polyethylene UHMW-PE with molecular density 5,600,000 g/mol
Linear expansion coefficient: 1.1x10^{-4} °F^{-1} (2x10^{-4} °C^{-1})
Operating temperature: -40 to 176°F (-40 to +80°C)

109 *Flat clip-on wear strip*

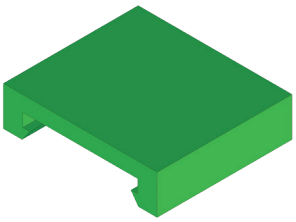

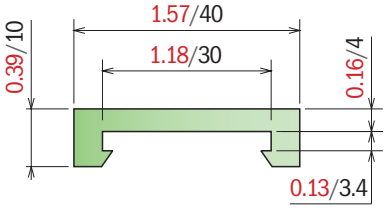

Part	Article-Nr.	L	Colour	Availability
109	10901C	10 ft	black	Stock item
109	10901	20 ft	black	On request
109	10902C	10 ft	green	Stock item
109	10902	20 ft	green	On request
109	10901BC	10 ft	BluLub	Stock item
109	10901B	20 ft	BluLub	On request
109	10903C	10 ft	white	Stock item
109	10903	20 ft	white	Stock item
109	10901B-30	100 ft	BluLub	On request

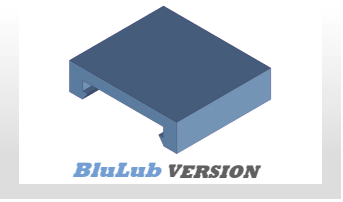

10/20 ft

Coils available

110 *Flat clip-on wear strip with nose*

On request available in white color

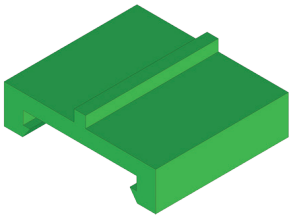

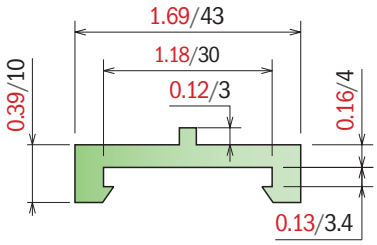

Part	Article-Nr.	L	Colour	Availability
110	11001C	10 ft	black	Stock item
110	11001	20 ft	black	On request
110	11002C	10 ft	green	Stock item
110	11002	20 ft	green	On request

10/20 ft

156 *Clip-on wear strip for belt*

On request available in white color

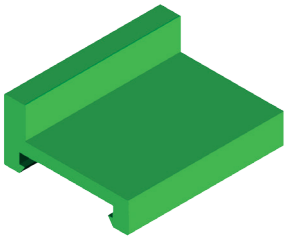

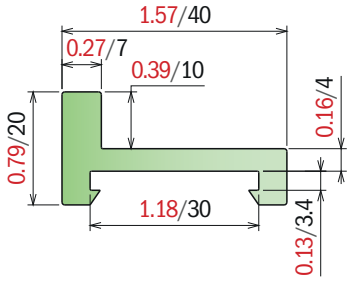

Part	Article-Nr.	L	Colour	Availability
156	15601C	10 ft	black	Stock item
156	15601	20 ft	black	On request
156	15602C	10 ft	green	Stock item
156	15602	20 ft	green	On request

10/20 ft

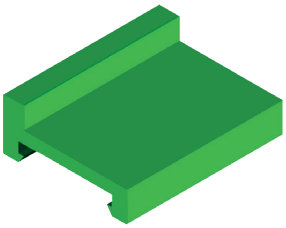

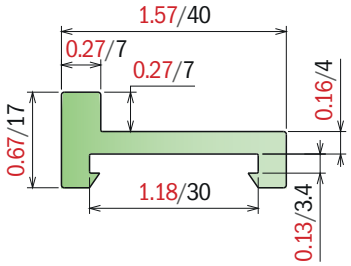

Part	Article-Nr.	L	Colour	Availability
156	15699C	10 ft	green	On request

10 ft

Material:
Polyethylene UHMW-PE with molecular density 5,600,000 g/mol
Linear expansion coefficient: 1.1×10^{-4} °F^{-1} (2×10^{-4} °C^{-1})
Operating temperature: -40 to 176°F (-40 to +80°C)

112 Profile

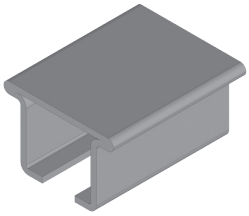

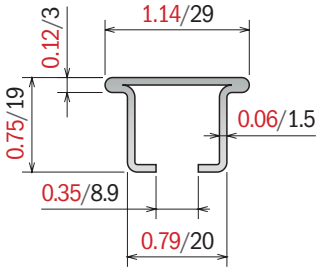

Part	Article-Nr.	L	Material	Availability
112	11201C	10 ft	AISI 304	Stock item
112	11201	20 ft	AISI 304	On request
112	11202C	10 ft	AISI 430	Stock item
112	11202	20 ft	AISI 430	On request

Assembly with accessories at pages 245-246

10/20 ft

147 Aluminum profile

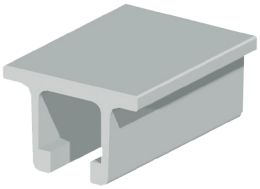

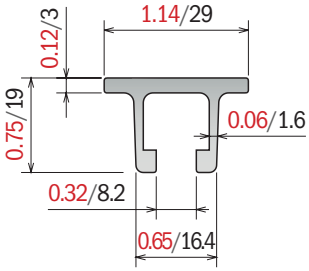

Part	Article-Nr.	L	Material	Availability
147	14701C	10 ft	Aluminium	Stock item
147	14701	20 ft	Aluminium	On request

10/20 ft

133 Profile assembled clip-on

On request available in white color

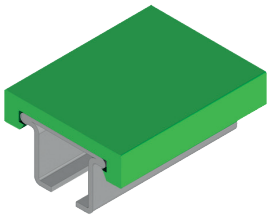

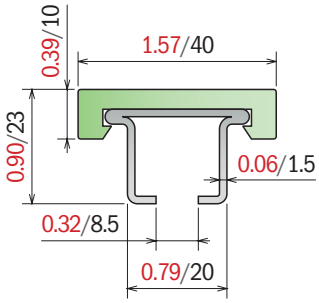

Part	Article-Nr.	L	Material	Colour	Availability
133	13301C	10 ft	AISI 304	green	Stock item
133	13301	20 ft	AISI 304	green	On request
133	13302C	10 ft	AISI 430	green	Stock item
133	13302	20 ft	AISI 430	green	On request
133	13303C	10 ft	AISI 304	black	Stock item
133	13303	20 ft	AISI 304	black	On request
133	13304C	10 ft	AISI 430	black	Stock item
133	13304	20 ft	AISI 430	black	On request
133	13305BC	10 ft	AISI 304	BluLub	Stock item
133	13305B	20 ft	AISI 304	BluLub	On request
133	13306BC	10 ft	AISI 430	BluLub	Stock item
133	13306B	20 ft	AISI 430	BluLub	On request

Assembly with accessories at pages 245-246

10/20 ft

148 Profile assembled clip-on

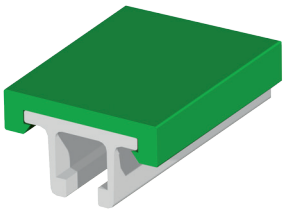

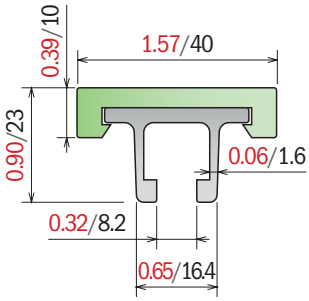

Part	Article-Nr.	L	Material	Colour	Availability
148	14801C	10 ft	Aluminium	green	Stock item
148	14801	20 ft	Aluminium	green	On request
148	14801BC	10 ft	Aluminium	BluLub	Stock item
148	14801B	20 ft	Aluminium	BluLub	On request
148	14802C	10 ft	Aluminium	black	Stock item
148	14802	20 ft	Aluminium	black	On request
148	14803C	10 ft	Aluminium	white	Stock item

10/20 ft

Material:
Polyethylene UHMW-PE with molecular density 5,600,000 g/mol
Linear expansion coefficient: 1.1x10^{-4} °F^{-1} (2x10^{-4} °C^{-1})
Operating temperature: -40 to 176°F (-40 to +80°C)

157

Wear strip assembled for belt

On request available in white color

Part	Article-Nr.	L	Material	Colour	Availability
157	15701C	10 ft	AISI 304	green	Stock item
157	15701	20 ft	AISI 304	green	On request
157	15702C	10 ft	AISI 430	green	Stock item
157	15702	20 ft	AISI 430	green	On request

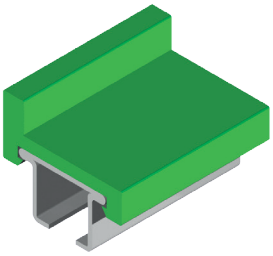

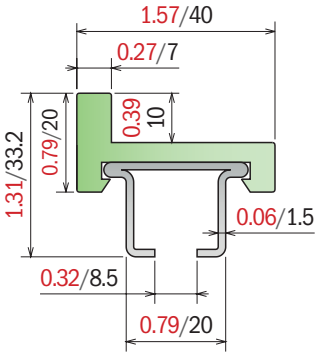

Assembly with accessories at pages 245-246

10/20 ft

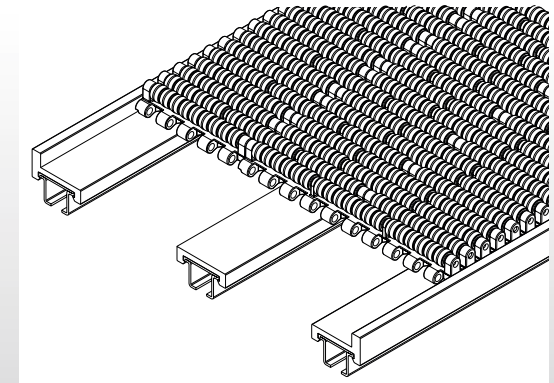

Part	Article-Nr.	L	Material	Colour	Availability
157	15799C	10 ft	AISI 304	green	On request

10 ft

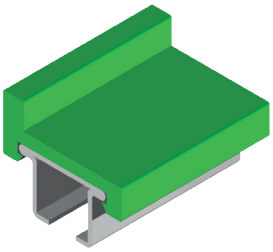

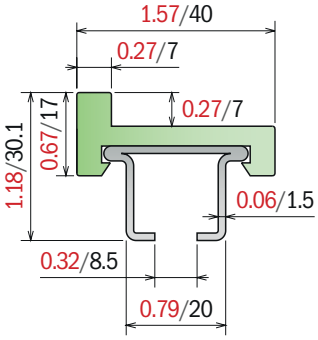

Material:
Polyethylene UHMW-PE with molecular density 5,600,000 g/mol
Linear expansion coefficient: $1.1x10^{-4}$ °F^{-1} ($2x10^{-4}$ °C^{-1})
Operating temperature: -40 to 176°F (-40 to +80°C)

118 *D-Profile*

Part	Article-Nr.	L	Material	Availability
118	11801C	10 ft	AISI 304	Stock item
118	11801	20 ft	AISI 304	On request
118	11802C	10 ft	AISI 430	Stock item
118	11802	20 ft	AISI 430	On request

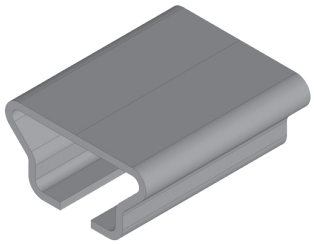

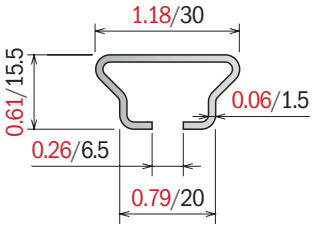

10/20 ft

149 *U-profile with nose*

On request available in white color

Part	Article-Nr.	L	Colour	Availability
149	14950C	10 ft	black	Stock item
149	14950	20 ft	black	On request
149	14952C	10 ft	green	Stock item
149	14952	20 ft	green	On request

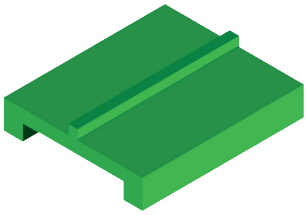

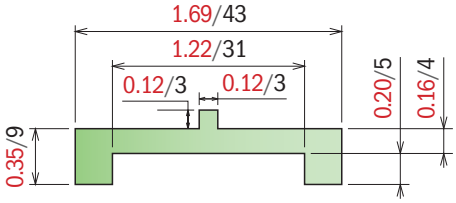

Coils available

10/20 ft

177 *U-profile*

On request available in white color

Part	Article-Nr.	L	Colour	Availability
177	17701C	10 ft	black	Stock item
177	17701	20 ft	black	On request
177	17702C	10 ft	green	Stock item
177	17702	20 ft	green	On request
177	17701BC	10 ft	BluLub	Stock item
177	17701B	20 ft	BluLub	On request
177	17702-30	100 ft	green	On request

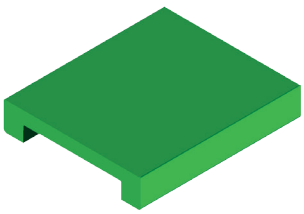

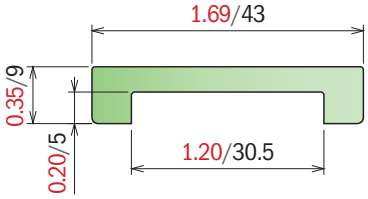

Coils available

10/20 ft

Material:
Polyethylene UHMW-PE with molecular density 5,600,000 g/mol
Linear expansion coefficient: 1.1x10^{-4} °F^{-1} (2x10^{-4} °C^{-1})
Operating temperature: -40 to 176°F (-40 to +80°C)

1059

U-profile

On request available in white color

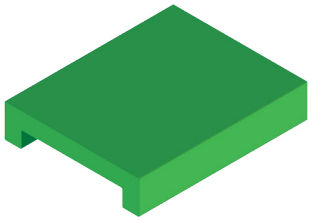

Part	Article-Nr.	L	Colour	Availability
1059	105901C	10 ft	black	Stock item
1059	105901	20 ft	black	On request
1059	105902C	10 ft	green	Stock item
1059	105902	20 ft	green	On request
1059	105901BC	10 ft	BluLub	Stock item
1059	105901B	20 ft	BluLub	On request

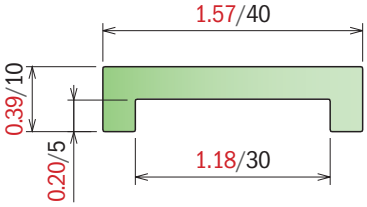

Coils available

10/20 ft

178

U-profile

On request available in white color

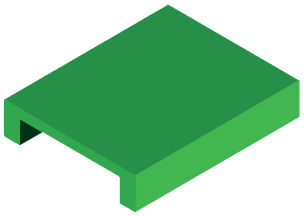

Part	Article-Nr.	L	Colour	Availability
178	17801C	10 ft	black	Stock item
178	17801	20 ft	black	On request
178	17802C	10 ft	green	Stock item
178	17802	20 ft	green	On request
178	17801BC	10 ft	BluLub	Stock item
178	17801B	20 ft	BluLub	On request

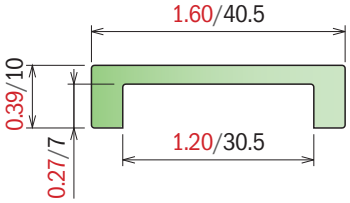

Coils available

10/20 ft

111

U-profile

On request available in white color

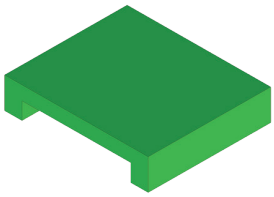

Part	Article-Nr.	L	Colour	Availability
111	11101C	10 ft	black	Stock item
111	11101	20 ft	black	On request
111	11102C	10 ft	green	Stock item
111	11102	20 ft	green	On request
111	11101-60	200 ft	black	On request
111	11102-60	200 ft	green	On request
111	11101BC	10 ft	BluLub	Stock item
111	11101B	20 ft	BluLub	On request

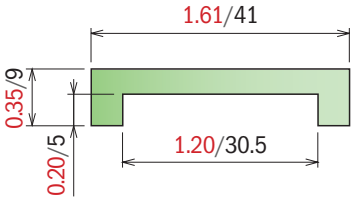

Coils available

10/20 ft

Material:
Polyethylene UHMW-PE with molecular density 5,600,000 g/mol
Linear expansion coefficient: 1.1×10^{-4} °F^{-1} (2×10^{-4} °C^{-1})
Operating temperature: -40 to 176°F (-40 to +80°C)

1060 *U-profile*

On request available in white color

Part	Article-Nr.	L	Colour	Availability
1060	106001C	10 ft	black	Stock item
1060	106001	20 ft	black	On request
1060	106002C	10 ft	green	Stock item
1060	106002	20 ft	green	On request

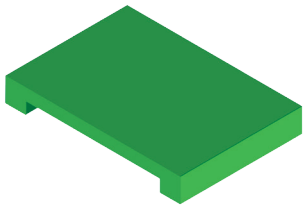

Coils available

10/20 ft

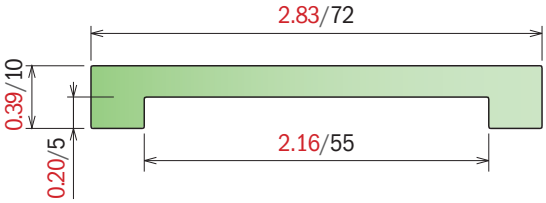

199 *U-profile*

Part	Article-Nr.	L	Colour	Availability
199	19976	10 ft	white	On request

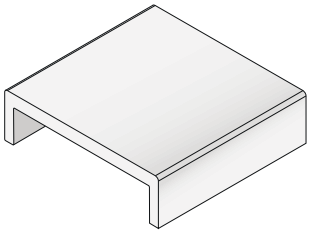

20 ft

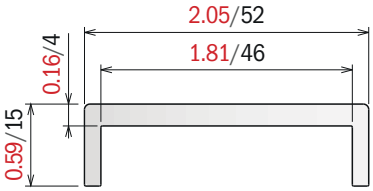

Material:
Polyethylene UHMW-PE with molecular density 5,600,000 g/mol
Linear expansion coefficient: 1.1x10^{-4} °F^{-1} (2x10^{-4} °C^{-1})
Operating temperature: -40 to 176°F (-40 to +80°C)

180 *Bar cover*

Part	Article-Nr.	L	Colour	Availability
180	18003C	10 ft	white	Stock item
180	18003	20 ft	white	On request

10/20 ft

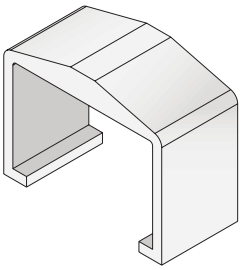

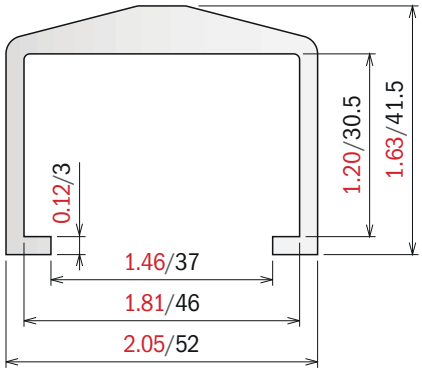

181 *Bar cover 1x1*

Fit on 1x1 Bar (25x25 mm)

Part	Article-Nr.	L	Colour	Availability
181	18103C	10 ft	white	Stock item
181	18103	20 ft	white	On request

10/20 ft

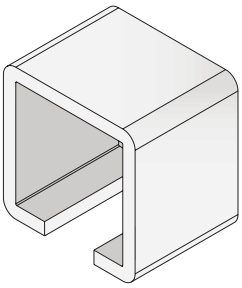

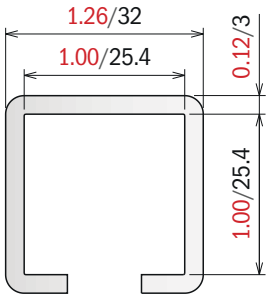

1052 *Bar cover 1.5x2*

Fit on 1½ x 2 Bar

Part	Article-Nr.	L	Colour	Availability
1052	105203C	10 ft	white	Stock item
1052	105203	20 ft	white	On request

10/20 ft

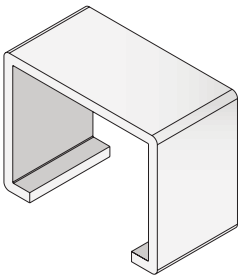

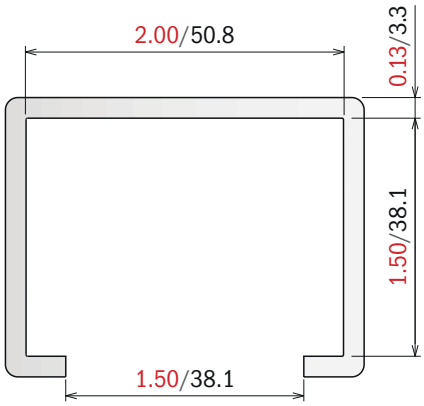

Material:
Polyethylene UHMW-PE with molecular density 5,600,000 g/mol
Linear expansion coefficient: 1.1×10^{-4} °F^{-1} (2×10^{-4} °C^{-1})
Operating temperature: -40 to 176°F (-40 to +80°C)

1000

Bar cover 1/16"

Fit on 1/16 Bar (1.5 mm)

Part	Article-Nr.	L	Colour	Availability
1000	100003-30	100 ft	white	On request

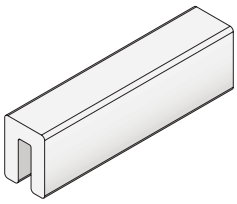

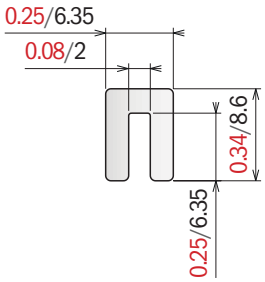

100 ft

1001

Bar cover 1/16"

Fit on 1/16 Bar (1.5 mm)

Part	Article-Nr.	L	Colour	Availability
1001	100103-30	100 ft	white	On request

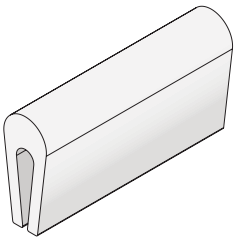

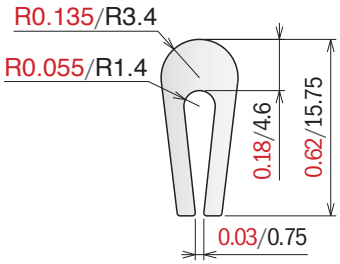

100 ft

1002

Bar cover 1/8"

Fit on 1/8 Bar (3 mm)

Part	Article-Nr.	L	Colour	Availability
1002	100203-30	100 ft	white	On request

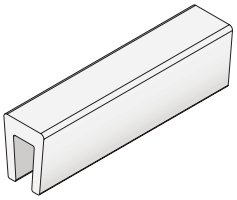

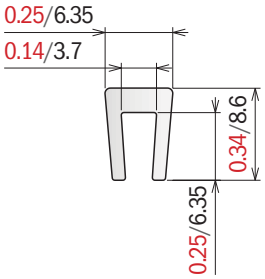

100 ft

1003

Bar cover 1/8"

Fit on 1/8 Bar (3 mm)

Part	Article-Nr.	L	Colour	Availability
1003	100303-30	100 ft	white	On request

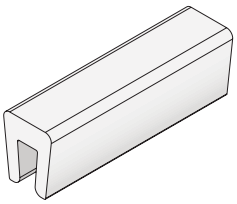

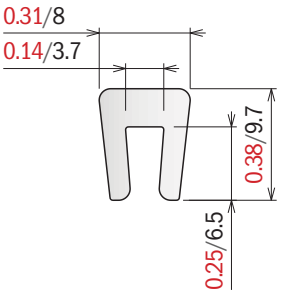

100 ft

1004

Bar cover 1/8"

Fit on 1/8 Bar (3 mm)

Part	Article-Nr.	L	Colour	Availability
1004	100403-30	100 ft	white	On request

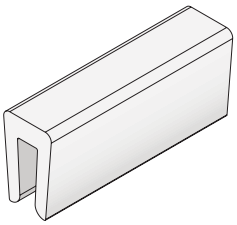

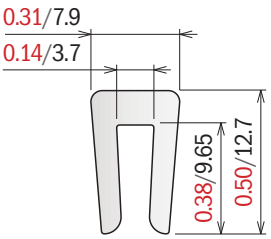

100 ft

Material:
Polyethylene UHMW-PE with molecular density 5,600,000 g/mol
Linear expansion coefficient: 1.1x10^{-4} °F^{-1} (2x10^{-4} °C^{-1})
Operating temperature: -40 to 176°F (-40 to +80°C)

1006

Bar cover 3/16"

Fit on 3/16 Bar (5 mm)

Part	Article-Nr.	L	Colour	Availability
1006	100603-30	100 ft	white	On request

100 ft

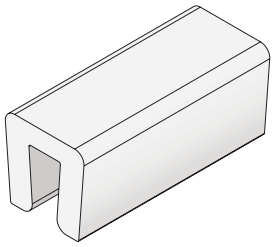

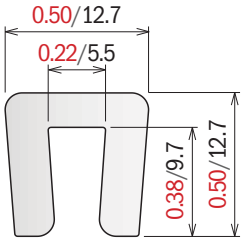

153

Bar cover 3/16"

Fit on 3/16 Bar (5 mm)

Part	Article-Nr.	L	Colour	Availability
153	15302	20 ft	green	On request
153	15302C	10 ft	green	On request
153	15303	20 ft	white	On request
153	15303-30	100 ft	white	Stock item
153	15300	20 ft	BluLub	Stock item
153	15300-30	100 ft	BluLub	Stock item
153	15300C	10 ft	BluLub	On request

100 ft 10/20 ft

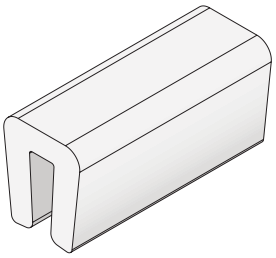

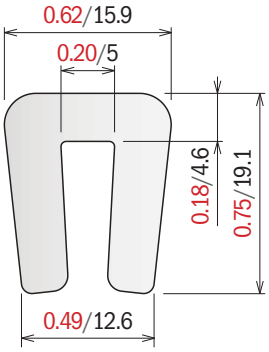

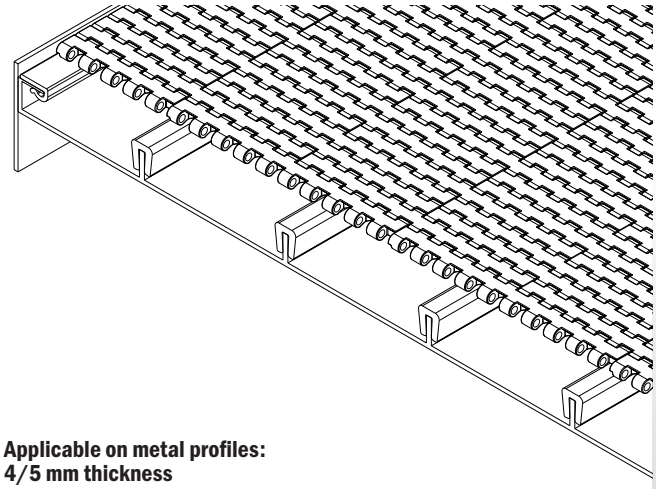

Applicable on metal profiles:
4/5 mm thickness

Material:
Polyethylene UHMW-PE with molecular density 5,600,000 g/mol
Linear expansion coefficient: 1.1×10^{-4} °F^{-1} (2×10^{-4} °C^{-1})
Operating temperature: -40 to 176°F (-40 to +80°C)

1007

Bar cover 3/16"

Fit on 3/16 Bar (5 mm)

Part	Article-Nr.	L	Colour	Availability
1007	100703	20 ft	white	On request
1007	100703B	20 ft	BluLub	On request

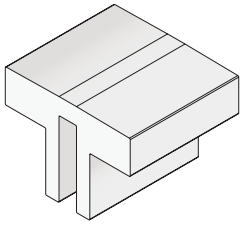

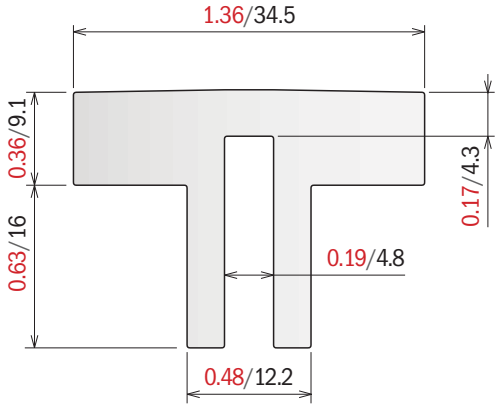

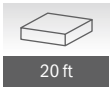
20 ft

1008

Bar cover 3/16"

Fit on 3/16 Bar (5 mm)

Part	Article-Nr.	L	Colour	Availability
1008	100803	20 ft	white	On request
1008	100803B	20 ft	BluLub	On request

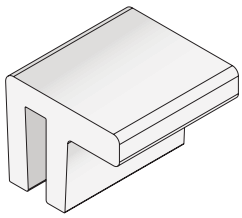

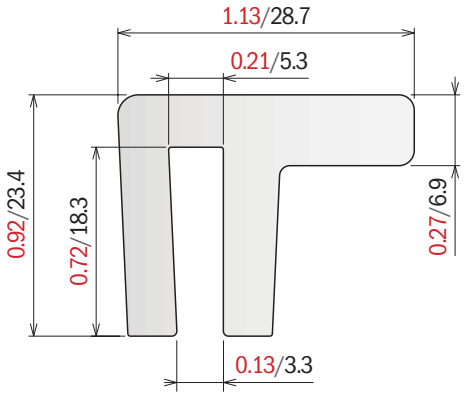

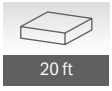
20 ft

1009

Bar cap 1/4"

Fit on 1/4 Bar (6 mm)

Part	Article-Nr.	L	Colour	Availability
1009	100903-30	100 ft	white	On request

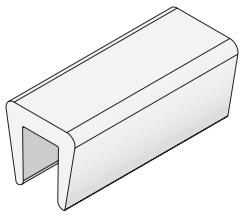

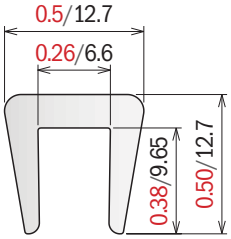

100 ft

Material:
Polyethylene UHMW-PE with molecular density 5,600,000 g/mol
Linear expansion coefficient: 1.1x10^{-4} °F^{-1} (2x10^{-4} °C^{-1})
Operating temperature: -40 to 176°F (-40 to +80°C)

1010

Bar cap 1/4"

Fit on 1/4 Bar (6 mm)

Part	Article-Nr.	L	Colour	Availability
1010	101003-30	100 ft	white	On request

100 ft

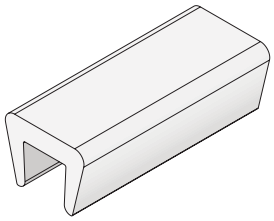

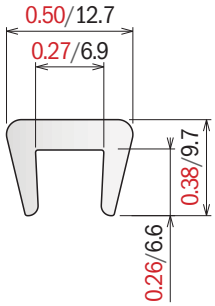

1011

Bar cap 3/8"

Fit on 3/8 Bar (10 mm)

Part	Article-Nr.	L	Colour	Availability
1011	101103-30	100 ft	white	On request
1011	101103-60	200 ft	white	On request

100/200 ft

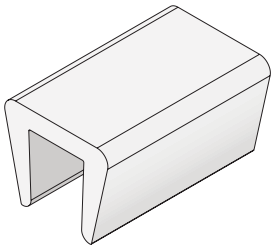

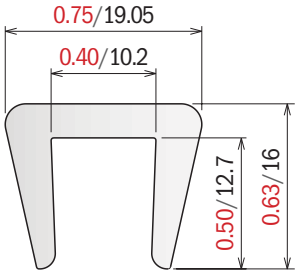

1012

Bar cap 1/2"

Fit on 1/2 Bar (12/13 mm)

Part	Article-Nr.	L	Colour	Availability
1012	101203-30	100 ft	white	On request

100 ft

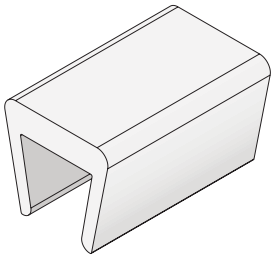

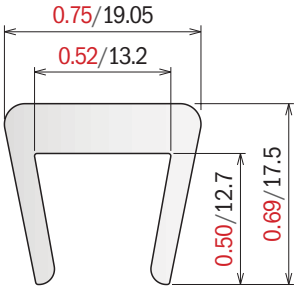

1013

Bar cap 3/8"

Fit on 3/8 Bar (10 mm)

Part	Article-Nr.	L	Colour	Availability
1013	101303	20 ft	white	On request

20 ft

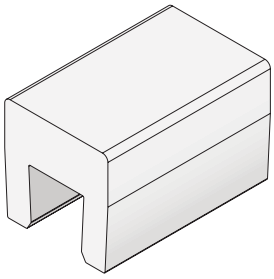

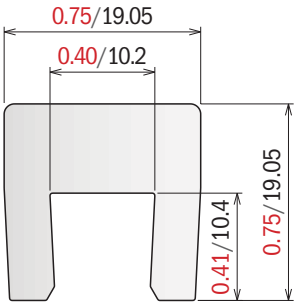

Material:
Polyethylene UHMW-PE with molecular density 5,600,000 g/mol
Linear expansion coefficient: 1.1×10^{-4} °F^{-1} (2×10^{-4} °C^{-1})
Operating temperature: -40 to 176°F (-40 to +80°C)

1040 *Belt side guide*

Fit on 1/8 Bar (3 mm)

Part	Article-Nr.	L	Colour	Availability
1040	104003C	10 ft	white	On request
1040	104003	20 ft	white	On request

10/20 ft

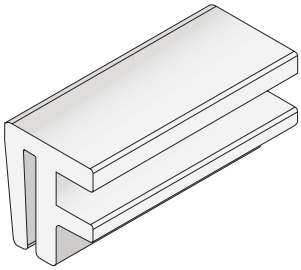

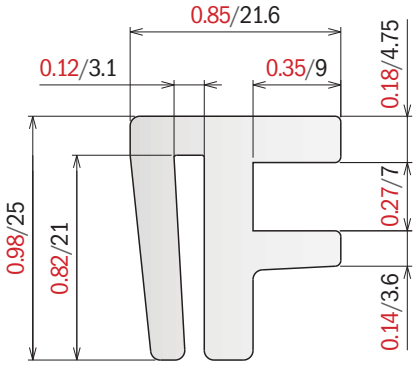

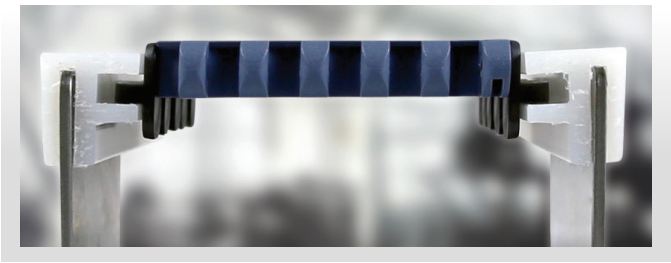

Applicable on metal profiles: 1/8 Bar (3 mm)

Material:
Metal profile: Stainless steel
Plastic profile: UHMW-PE

119 *Guide rail round*

New BluLub

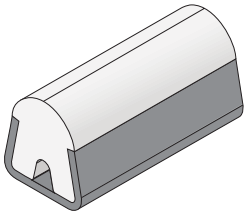

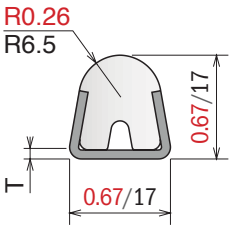

Part	Article-Nr.	L	T	Metal profile	Colour	Availability	Type
119	11963	10 ft	0.075/1.9	AISI 304	white	On request	
119	11967	20 ft	0.075/1.9	AISI 304	white	On request	
119	11963B	10 ft	0.075/1.9	AISI 304	BluLub	On request	
119	11967B	20 ft	0.075/1.9	AISI 304	BluLub	On request	
119	11901C	10 ft	0.059/1.5	AISI 304	white	Stock item	
119	11901	20 ft	0.059/1.5	AISI 304	white	Stock item	
119	11901BC	10 ft	0.059/1.5	AISI 304	BluLub	Stock item	
119	11901B	20 ft	0.059/1.5	AISI 304	BluLub	Stock item	

120 *Guide rail modified*

New BluLub

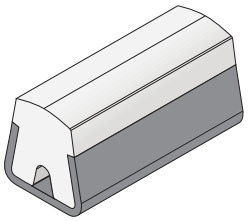

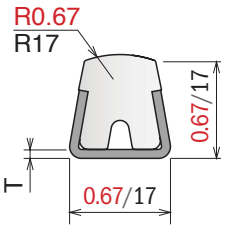

Part	Article-Nr.	L	T	Metal profile	Colour	Availability	Type
120	12063	10 ft	0.075/1.9	AISI 304	white	On request	
120	12067	20 ft	0.075/1.9	AISI 304	white	On request	
120	12063B	10 ft	0.075/1.9	AISI 304	BluLub	On request	
120	12067B	20 ft	0.075/1.9	AISI 304	BluLub	On request	
120	12001C	10 ft	0.059/1.5	AISI 304	white	Stock item	
120	12001	20 ft	0.059/1.5	AISI 304	white	Stock item	
120	12001BC	10 ft	0.059/1.5	AISI 304	BluLub	Stock item	
120	12001B	20 ft	0.059/1.5	AISI 304	BluLub	Stock item	

121 *Guide rail flat*

New BluLub

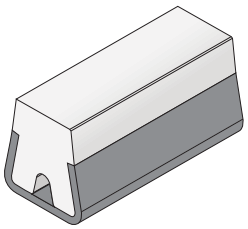

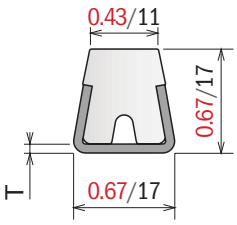

Part	Article-Nr.	L	T	Metal profile	Colour	Availability	Type
121	12163	10 ft	0.075/1.9	AISI 304	white	On request	
121	12167	20 ft	0.075/1.9	AISI 304	white	On request	
121	12163B	10 ft	0.075/1.9	AISI 304	BluLub	On request	
121	12167B	20 ft	0.075/1.9	AISI 304	BluLub	On request	
121	12101C	10 ft	0.059/1.5	AISI 304	white	Stock item	
121	12101	20 ft	0.059/1.5	AISI 304	white	Stock item	
121	12101BC	10 ft	0.059/1.5	AISI 304	BluLub	Stock item	
121	12101B	20 ft	0.059/1.5	AISI 304	BluLub	Stock item	

152 *Guide rail 25°*

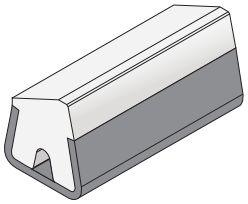

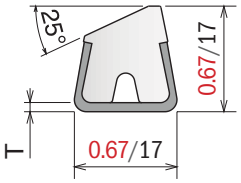

Part	Article-Nr.	L	T	Metal profile	Colour	Availability	Type
152	15263	10 ft	0.075/1.9	AISI 304	white	On request	
152	15201C	10 ft	0.059/1.5	AISI 304	white	Stock item	

10/20 ft

1067 *Guide rail H 18*

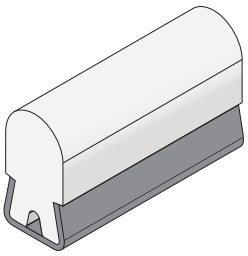

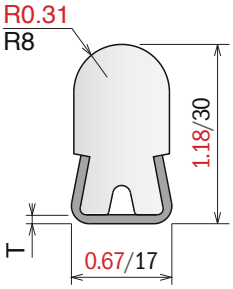

Part	Article-Nr.	L	T	Metal profile	Colour	Availability	Type
1067	106763	10 ft	0.075/1.9	AISI 304	white	On request	
1067	106701C	10 ft	0.059/1.5	AISI 304	white	On request	

10/20 ft

122

Guide rail T-shape 25,4 mm

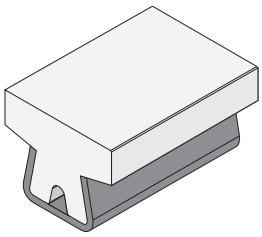

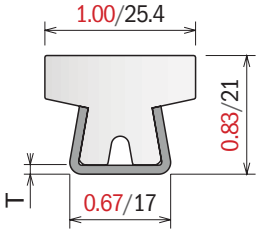

Part	Article-Nr.	L	T	Metal profile	Colour	Availability	Type
122	12263	10 ft	0.075/1.9	AISI 304	white	On request	
122	12201C	10 ft	0.059/1.5	AISI 304	white	Stock item	

10 ft

123

Guide rail T-shape 31,75 mm

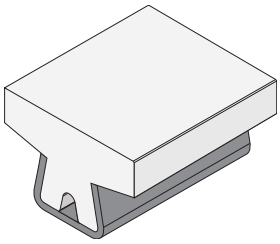

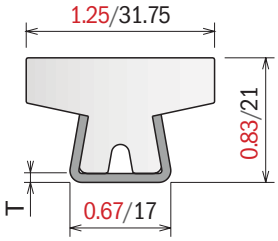

Part	Article-Nr.	L	T	Metal profile	Colour	Availability	Type
123	12363	10 ft	0.075/1.9	AISI 304	white	On request	
123	12301C	10 ft	0.059/1.5	AISI 304	white	Stock item	

10 ft

140

Guide rail T-shape wide flat 1”

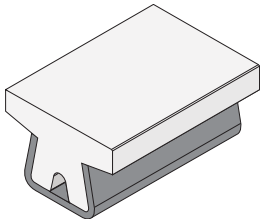

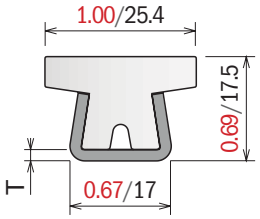

Part	Article-Nr.	L	T	Metal profile	Colour	Availability	Type
140	14063	10 ft	0.075/1.9	AISI 304	white	On request	
140	14001C	10 ft	0.059/1.5	AISI 304	white	Stock item	

10 ft

146

Guide rail T-shape wide flat 1.25”

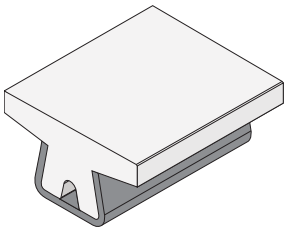

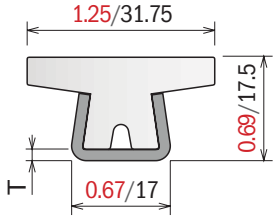

Part	Article-Nr.	L	T	Metal profile	Colour	Availability	Type
146	14663	10 ft	0.075/1.9	AISI 304	white	On request	
146	14601C	10 ft	0.059/1.5	AISI 304	white	Stock item	

10 ft

Material:
Metal profile: Stainless steel
Plastic profile: UHMW-PE

124 Guide rail T-shape 40 mm

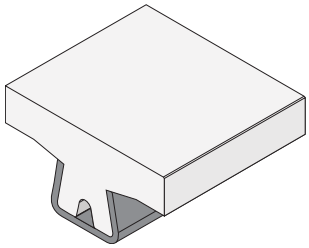

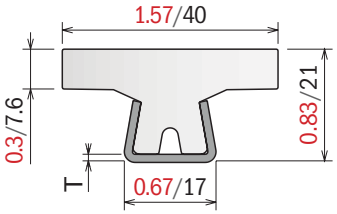

Part	Article-Nr.	L	T	Metal profile	Colour	Availability	Type
124	12463	10 ft	0.075/1.9	AISI 304	white	On request	
124	12401C	10 ft	0.059/1.5	AISI 304	white	Stock item	

10 ft

143 Guide rail T-shape 19,05 mm

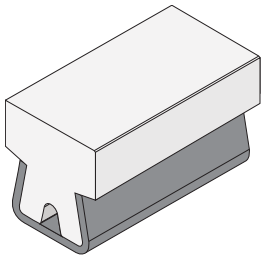

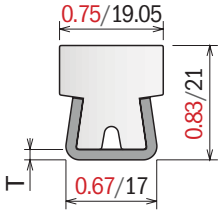

Part	Article-Nr.	L	T	Metal profile	Colour	Availability	Type
143	14363	10 ft	0.075/1.9	AISI 304	white	On request	
143	14301C	10 ft	0.059/1.5	AISI 304	white	Stock item	

10 ft

141 Guide rail T-shape 57,15 mm

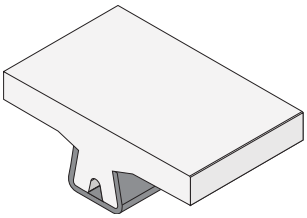

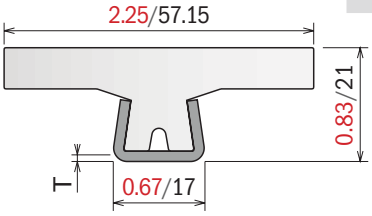

Part	Article-Nr.	L	T	Metal profile	Colour	Availability	Type
141	14163	10 ft	0.075/1.9	AISI 304	white	On request	
141	14101C	10 ft	0.059/1.5	AISI 304	white	Stock item	

10 ft

142 Guide rail T-shape 43,2 mm

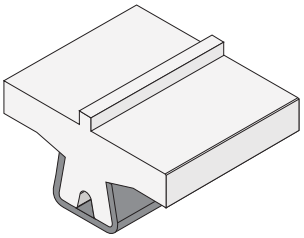

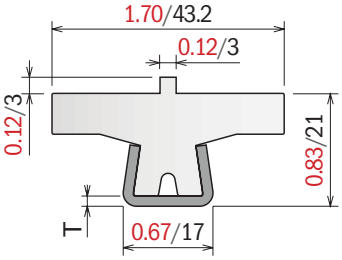

Part	Article-Nr.	L	T	Metal profile	Colour	Availability	Type
142	14263	10 ft	0.075/1.9	AISI 304	white	On request	
142	14201C	10 ft	0.059/1.5	AISI 304	white	Stock item	

10 ft

125

Guide rail L-shape 31,75 mm

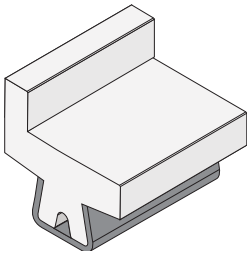

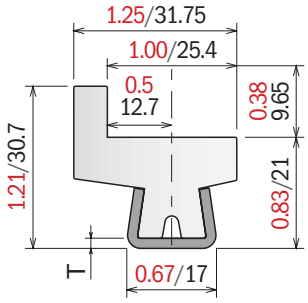

Part	Article-Nr.	L	T	Metal profile	Colour	Availability	Type
125	12563	10 ft	0.075/1.9	AISI 304	white	On request	
125	12501C	10 ft	0.059/1.5	AISI 304	white	Stock item	

10 ft

144

Guide rail L-shape 31,75 mm

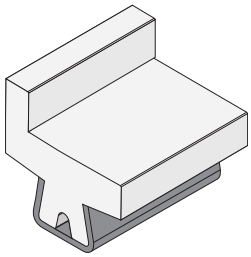

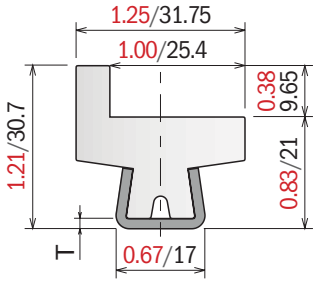

Part	Article-Nr.	L	T	Metal profile	Colour	Availability	Type
144	14463	10 ft	0.075/1.9	AISI 304	white	On request	
144	14401C	10 ft	0.059/1.5	AISI 304	white	Stock item	

10 ft

184

Guide rail for chain

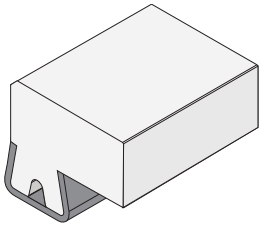

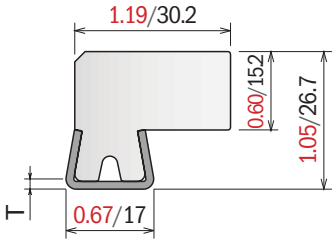

Part	Article-Nr.	L	T	Metal profile	Colour	Availability	Type
184	18463	10 ft	0.075/1.9	AISI 304	white	On request	
184	18401C	10 ft	0.059/1.5	AISI 304	white	Stock item	

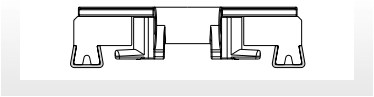

10 ft

145

Belt side guide

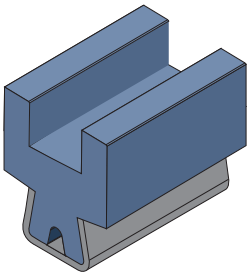

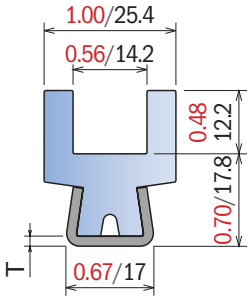

Part	Article-Nr.	L	T	Metal profile	Material	Availability	Type
145	14563	10 ft	0.075/1.9	AISI 304	BluLub	On request	
145	14503C	10 ft	0.059/1.5	AISI 304	BluLub	Stock item	

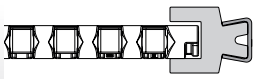

Bendable profile, generally used with sideflexing belt 600 series

10 ft

Material:
Polyethylene UHMW-PE with molecular density 5,600,000 g/mol
Linear expansion coefficient: 1.1x10^{-4} °F^{-1} (2x10^{-4} °C^{-1})
Operating temperature: -40 to 176°F (-40 to +80°C)

130 Aluminum rail for bottle guide

Part	Article-Nr.	L	Material	Type	Availability
130	13001C	10 ft	Aluminium	A	Stock item
130	13001	20 ft	Aluminium	A	On request
130	13002C	10 ft	Aluminium	B	On request

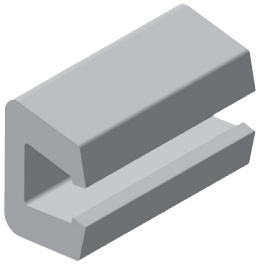

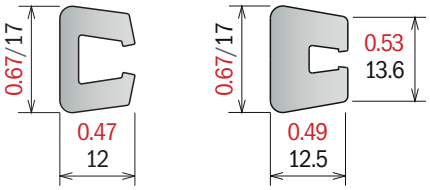

Type A Type B

10/20 ft

188 Aluminum rail for bottle guide

Part	Article-Nr.	L	Material	Availability
188	18801C	10 ft	Aluminium	Stock item
188	18801	20 ft	Aluminium	On request

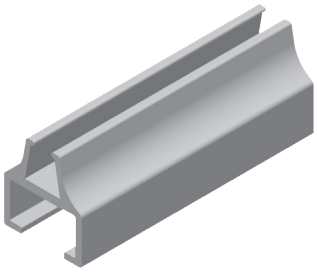

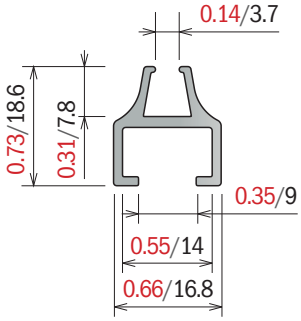

10/20 ft

131 Plastic rail for bottle guide

Part	Article-Nr.	L	Color	Type	Availability
131	13101B	10 ft	BluLub	A	Stock item
131	13101	20 ft	grey	A	Stock item
131	13102	10 ft	grey	B	On request

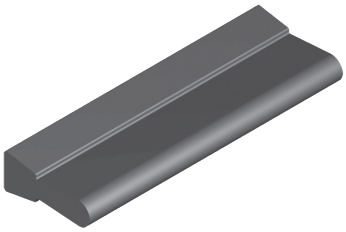

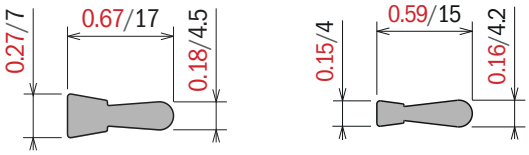

Type A Type B

100 ft

199 Bending machine

Part	Article-Nr.
199	19999

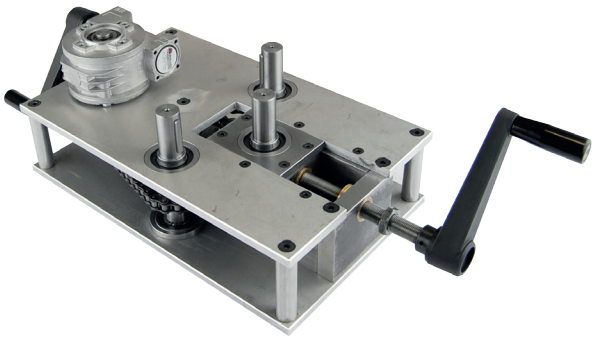

151 Roller for bending machine

Part	Article-Nr.
151	15101

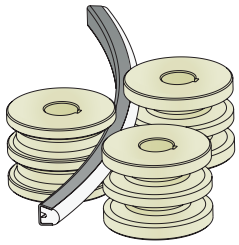

Internal curve

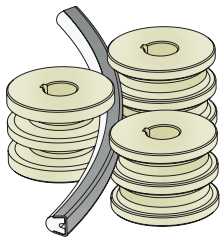

External curve

15101

for part 119-120-121

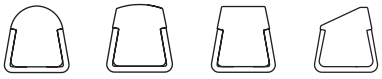

Part	Article-Nr.
151	15102

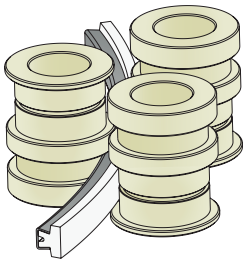

Internal curve

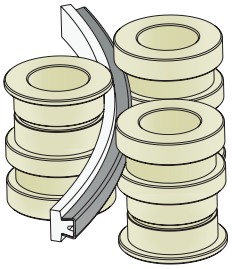

External curve

15102

for part 122-123-124-142-140-146

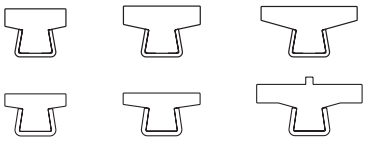

Part	Article-Nr.
151	15103

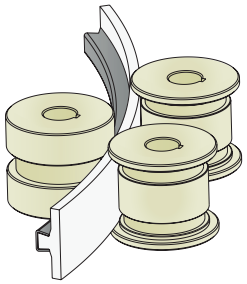

Internal curve

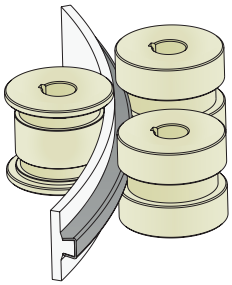

External curve

15103

for part 141

Part	Article-Nr.
151	15104

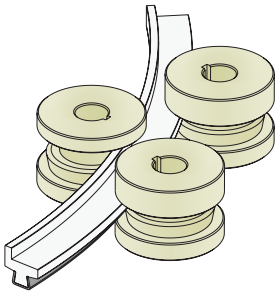

Internal curve

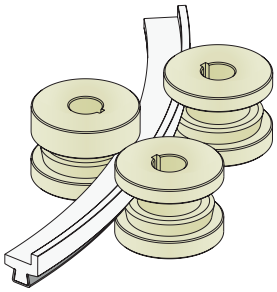

External curve

15104

for part 144

Part	Article-Nr.
151	15105

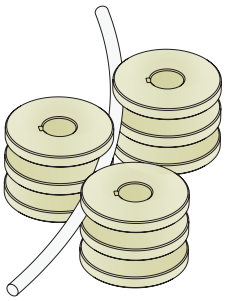

15101

for Ø8-Ø10-Ø12 - Ø1/2”-Ø5/8”

Material: Polyethylene UHMW-PE with molecular density 9,200,000 g/mo. **BluLub**® new material with reduced coefficient of friction and higher wear resistence. BluLub complies with the code of Federal Regulations of FDA. Linear expansion coefficient: $1.1x10^{-4}$ °F^{-1} ($2x10^{-4}$ °C^{-1}) Operating temperature: -40 to 176°F (-40 to +80°C)

170 Neck guide

Part	Article-Nr.	L	Material	Availability
170	17001B	10 ft	BluLub	Stock item
170	17002B	20 ft	BluLub	On request

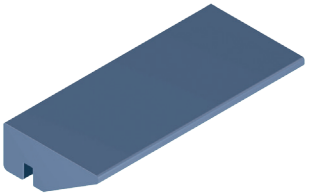

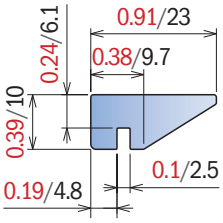

10/20 ft

168 Neck guide

Part	Article-Nr.	L	Material	Availability
168	16801B	10 ft	BluLub	Stock item
168	16802B	20 ft	BluLub	On request

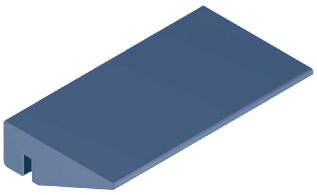

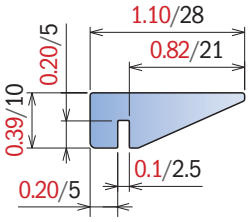

10/20 ft

169 Neck guide

Part	Article-Nr.	L	Material	Availability
169	16901B	10 ft	BluLub	Stock item
169	16902B	20 ft	BluLub	On request

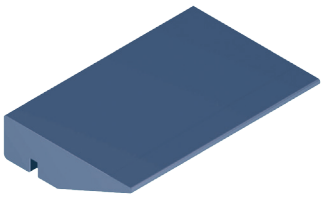

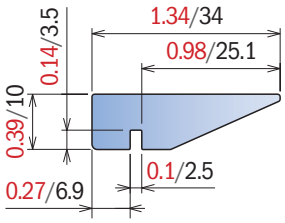

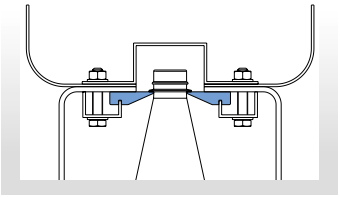

10/20 ft

1036 Neck guide

Fit on 13 ga (0.09”-2 mm) 14 ga (0.073”-1.8 mm)

Part	Article-Nr.	L	Material	Availability
1036	103600B	100 ft	BluLub	Stock item

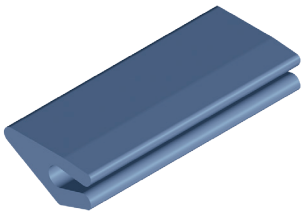

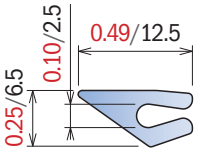

100 ft

1037 Neck guide

Fit on 11 ga (0.12”-3 mm)

Part	Article-Nr.	L	Material	Availability
1037	103700B	100 ft	BluLu	Stock item

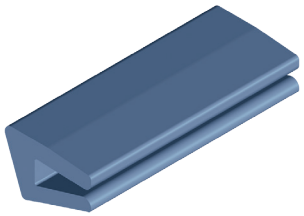

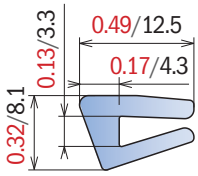

100 ft

Material: Polyethylene UHMW-PE with molecular density 9,200,000 g/mo. **BluLub**® new material with reduced coefficient of friction and higher wear resistence. BluLub complies with the code of Federal Regulations of FDA. Linear expansion coefficient: $1.1x10^{-4}$ °F^{-1} ($2x10^{-4}$ °C^{-1}) Operating temperature: -40 to 176°F (-40 to +80°C)

167 Neck guide

Fit on 13 ga (0.09”-2 mm) 14 ga (0.073”-1.8 mm)

Part	Article-Nr.	L	Material	Availability
167	16700B	20 ft	BluLub	Stock item
167	16700B-30	100 ft	BluLub	Stock item
167	16700B-75	250 ft	BluLub	Stock item

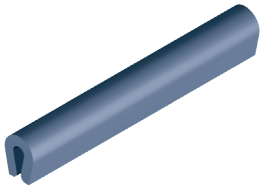

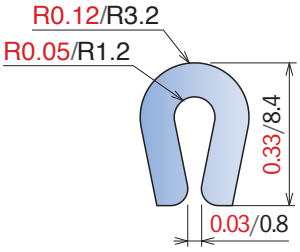

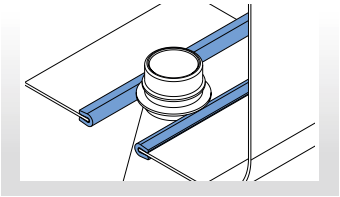

20 ft

100/250 ft

171 Neck guide

Fit on 11ga (0.12”-3 mm)

Part	Article-Nr.	L	Material	Availability
171	17100B	100 ft	BluLub	Stock item

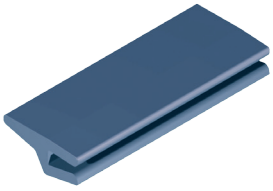

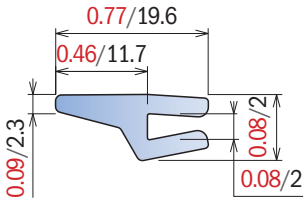

100 ft

172 Neck guide

Part	Article-Nr.	L	Material	Availability
172	17200B	100 ft	BluLub	Stock item

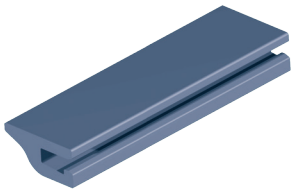

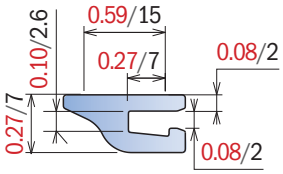

100 ft

173 Neck guide

Fit on 13 ga (0.09”-2 mm) 14 ga (0.073”-1.8 mm)

Part	Article-Nr.	L	Material	Availability
173	17300B	100 ft	BluLub	Stock item

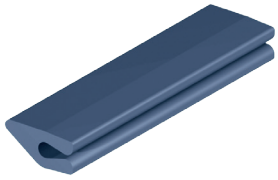

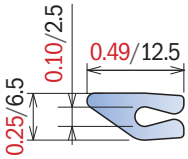

100 ft

192 Neck guide

Fit on 13 ga (0.09”-2 mm) 14 ga (0.073”-1.8 mm)

Part	Article-Nr.	L	Material	Availability
192	19200B	100 ft	BluLub	Stock item

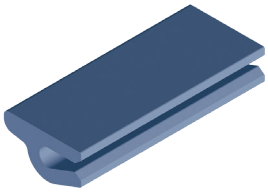

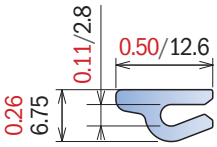

100 ft

1062 Neck guide

Fit on 13 ga (0.09”-2 mm) 14 ga (0.073”-1.8 mm)

Part	Article-Nr.	L	Material	Availability
1062	106200B	100 ft	BluLub	Stock item

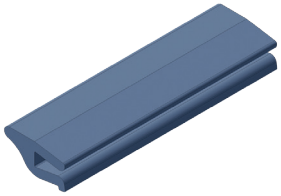

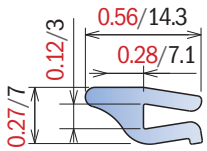

100 ft

Material:
Polyethylene UHMW-PE with molecular density 5,600,000 g/mol
Linear expansion coefficient: 1.1x10^{-4} °F^{-1} (2x10^{-4} °C^{-1})
Operating temperature: -40 to 176°F (-40 to +80°C)

163

Profile for aluminum guide

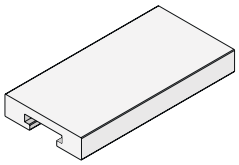

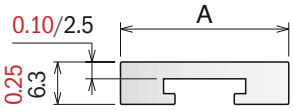

Coils available | 10/20 ft

Part	Article-Nr.	A in-mm	L	Colour	Availability
163	16303C	1.00/25,4	10 ft	white	Stock item
163	16303	1.00/25,4	20 ft	white	On request
163	16313C	1.25/31,75	10 ft	white	Stock item
163	16313	1.25/31,75	20 ft	white	On request
163	16323C	1.39/35,0	10 ft	white	Stock item
163	16323	1.39/35,0	20 ft	white	On request
163	16324C	1.50/38,1	10 ft	white	Stock item
163	16324	1.50/38,1	20 ft	white	On request

160

Profile 20 mm for aluminum guide

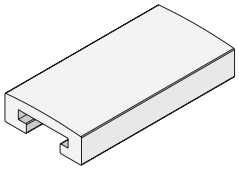

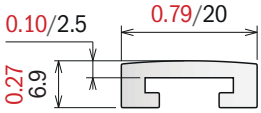

Part	Article-Nr.	L	Colour	Availability
160	16003C	10 ft	white	Stock item
160	16003	20 ft	white	On request

Coils available | 10/20 ft

161

Profile 20 mm for aluminum

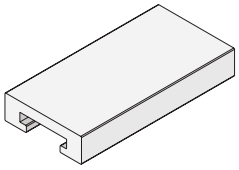

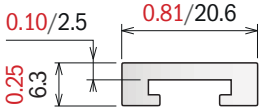

Part	Article-Nr.	L	Colour	Availability
161	16103C	10 ft	white	Stock item
161	16103	20 ft	white	On request

Coils available | 10/20 ft

162

Round profile for aluminum guide

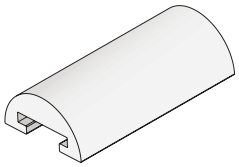

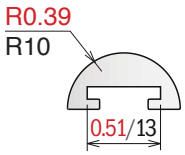

Part	Article-Nr.	L	Colour	Availability
162	16202C	10 ft	green	Stock item
162	16202	20 ft	green	On request
162	16203C	10 ft	white	Stock item
162	16203	20 ft	white	On request

Coils available | 10/20 ft

164

Aluminum guide

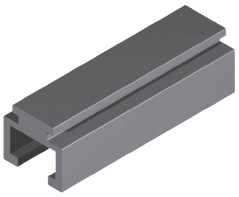

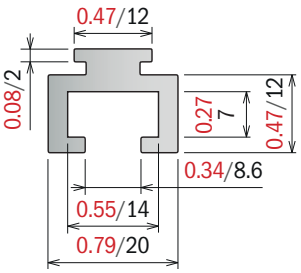

Part	Article-Nr.	L	Material	Availability
164	16401C	10 ft	Aluminium	Stock item
164	16401	20 ft	Aluminium	On request

Fixing screw: M8 hex.head or **PART 362**

10/20 ft

165

Aluminum guide

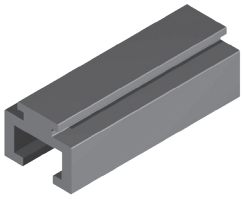

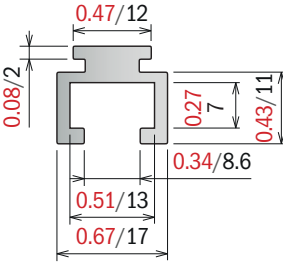

Part	Article-Nr.	L	Material	Availability
165	16501C	10 ft	Aluminium	Stock item
165	16501	20 ft	Aluminium	On request

Fixing screw: M8 hex.head or **PART 362**

10/20 ft

Material: Polyethylene UHMW-PE with molecular density 9,200,000 g/mo. ***BluLub®*** *new material with reduced coefficient of friction and higher wear resistence. BluLub complies with the code of Federal Regulations of FDA. Linear expansion coefficient: 1.1x10⁻⁴ °F⁻¹ (2x10⁻⁴ °C⁻¹) Operating temperature: -40 to 176°F (-40 to +80°C)*

154 *Side guide rail*

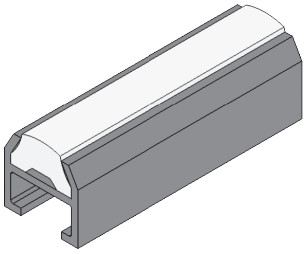

Part	Article-Nr.	L	Colour	Availability
154	15401C	10 ft	white	Stock item
154	15401	20 ft	white	On request
154	15401BC	10 ft	BluLub	Stock item
154	15401B	20 ft	BluLub	On request

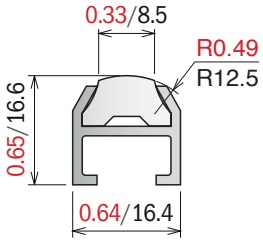

10/20 ft

155 *Side guide rail*

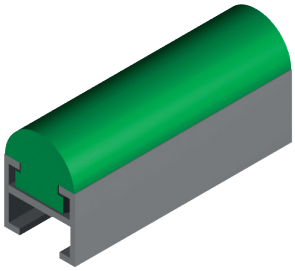

Part	Article-Nr.	L	Colour	Availability
155	15501C	10 ft	green	Stock item
155	15501	20 ft	green	On request

Fixing screw: M8 hex.head or **PART 362**

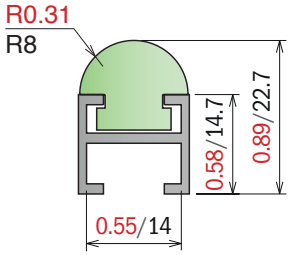

10/20 ft

134 *Standard guide rail*

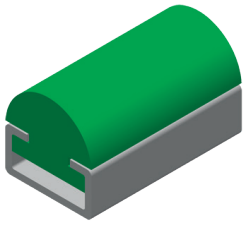

Part	Article-Nr.	L	Colour	Availability
134	13401C	10 ft	green	Stock item
134	13401	20 ft	green	On request

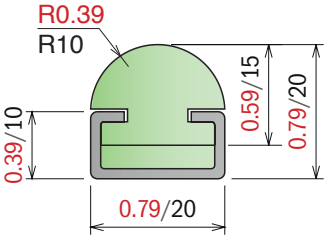

10/20 ft

Material:
Polyethylene UHMW-PE with molecular density 5,600,000 g/mol
Linear expansion coefficient: 1.1x10^{-4} °F^{-1} (2x10^{-4} °C^{-1})
Operating temperature: -40 to 176°F (-40 to +80°C)

1041

C-Profile

Fit on 3/16x1 Bar (5x25 mm)

Part	Article-Nr.	L	Colour	Availability
1041	104103C	10 ft	white	On request
1041	104103	20 ft	white	On request

10/20 ft

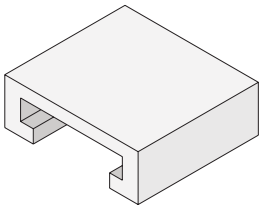

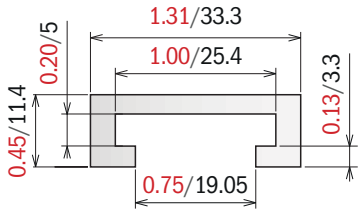

1042

C-Profile

Fit on ¼ x 2 Bar (6x50 mm)

Part	Article-Nr.	L	Colour	Availability
1042	104203C	10 ft	white	On request
1042	104203	20 ft	white	On request

10/20 ft

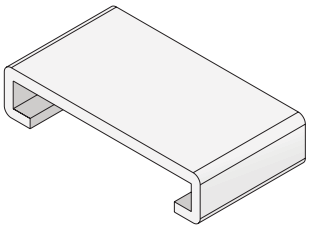

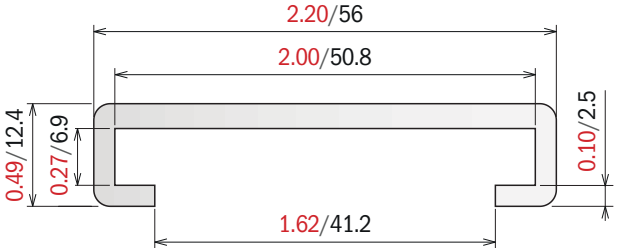

1043

C-Profile

Fit on ¼ x 2 Bar (6x50 mm)

Part	Article-Nr.	L	Colour	Availability
1043	104303C	10 ft	white	On request
1043	104303	20 ft	white	On request

10/20 ft

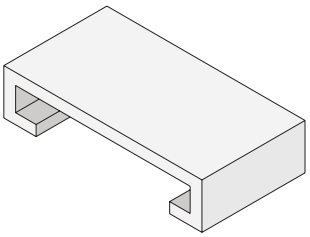

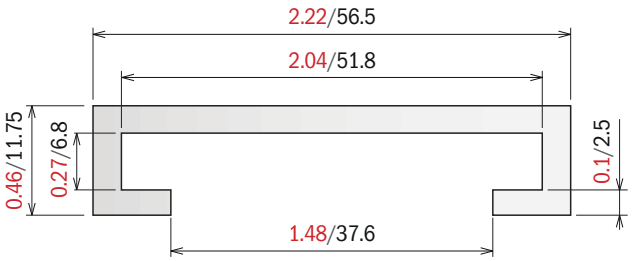

Material:
Polyethylene UHMW-PE with molecular density 5,600,000 g/mol
Linear expansion coefficient: 1.1×10^{-4} °F^{-1} (2×10^{-4} °C^{-1})
Operating temperature: -40 to 176°F (-40 to +80°C)

1044 C-Profile

Fit on ½ x 1½ Bar

Part	Article-Nr.	L	Colour	Availability
1044	104403C	10 ft	white	On request
1044	104403	20 ft	white	On request

10/20 ft

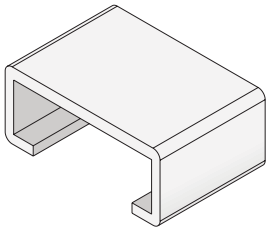

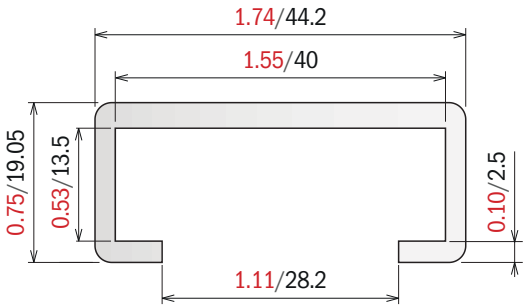

1045 C-Profile

Fit on ½ x 2 Bar

Part	Article-Nr.	L	Colour	Availability
1045	104503C	10 ft	white	On request
1045	104503	20 ft	white	On request

10/20 ft

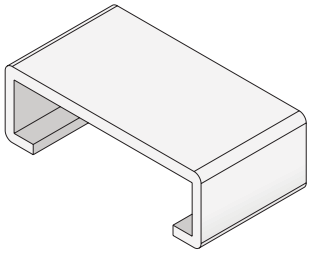

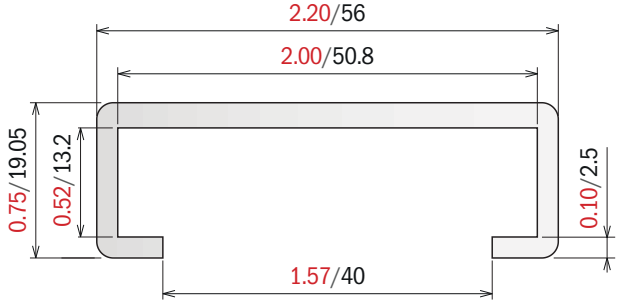

1053 Bar cover

Fit on ¼ x 1½ Bar

Part	Article-Nr.	L	Colour	Availability
1053	105303C	10 ft	white	On request
1053	105303	20 ft	white	On request

10/20 ft

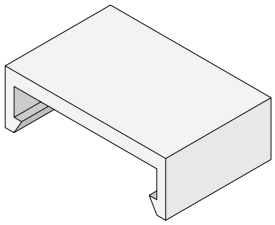

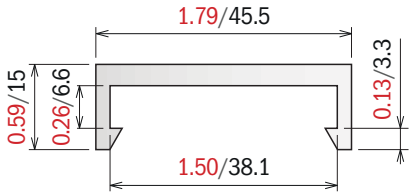

1054 Bar cover

Fit on ¼ x 1½ Bar

Part	Article-Nr.	L	Colour	Availability
1054	105403C	10 ft	white	On request
1054	105403	20 ft	white	On request

10/20 ft

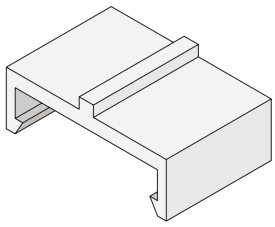

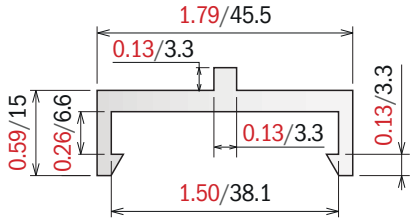

Material:
Polyethylene UHMW-PE with molecular density 5,600,000 g/mol
Linear expansion coefficient: 1.1x10^{-4} °F^{-1} (2x10^{-4} °C^{-1})
Operating temperature: -40 to 176°F (-40 to +80°C)

135

Side guide H.78 mm

Part	Article-Nr.	L	Colour	Availability
135	13501C	10 ft	black	Stock item
135	13501	20 ft	black	On request
135	13502C	10 ft	blue	Stock item
135	13502	20 ft	blue	On request

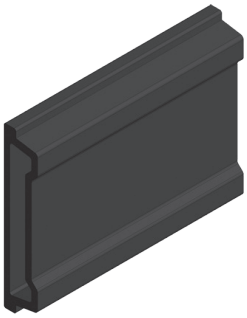

Used with:
PART 394
PART 331

10/20 ft

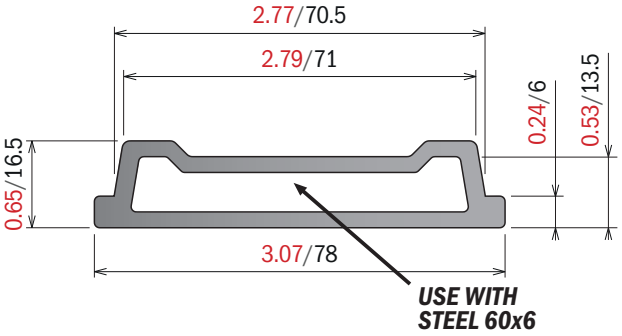

136

Side guide H.87 mm

Part	Article-Nr.	L	Colour	Availability
136	13601C	10 ft	black	Stock item
136	13601	20 ft	black	On request
136	13602C	10 ft	blue	Stock item
136	13602	20 ft	blue	On request

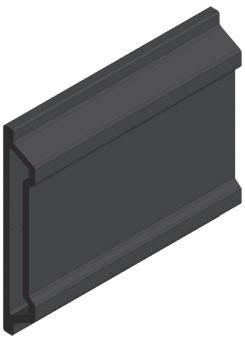

Used with:
PART 394
PART 345

10/20 ft

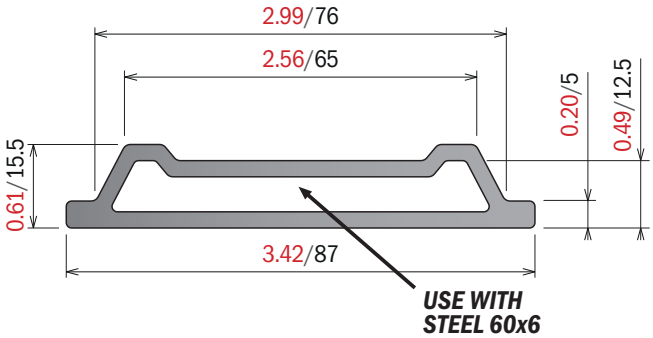

Material:
Polyethylene UHMW-PE with molecular density 5,600,000 g/mol
Linear expansion coefficient: 1.1x10^{-4} °F^{-1} (2x10^{-4} °C^{-1})
Operating temperature: -40 to 176°F (-40 to +80°C)

137 C-Profile

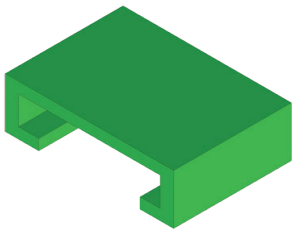

Part	Article-Nr.	L	A in-mm	B in-mm	Colour	Availability
137	13701C	10 ft	0.33/8,5	0.55/14	green	Stock item
137	13701	20 ft	0.33/8,5	0.55/14	green	On request
137	13701BC	10 ft	0.33/8,5	0.55/14	BluLub	Stock item
137	13701B	20 ft	0.33/8,5	0.55/14	BluLub	On request
137	13702C	10 ft	0.33/8,5	0.55/14	black	Stock item
137	13702	20 ft	0.33/8,5	0.55/14	black	On request
137	13711C	10 ft	0.41/10,5	0.63/16	green	Stock item
137	13711	20 ft	0.41/10,5	0.63/16	green	On request
137	13711BC	10 ft	0.41/10,5	0.63/16	BluLub	Stock item
137	13711B	20 ft	0.41/10,5	0.63/16	BluLub	On request

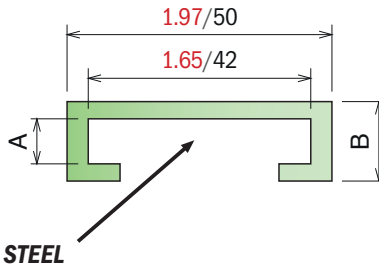

USE WITH STEEL 40x8 or 40x10

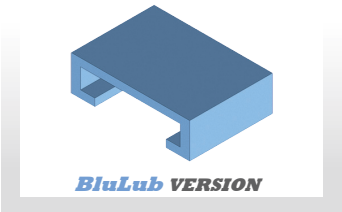

10/20 ft

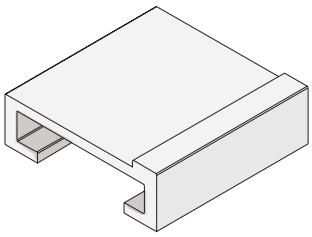

Part	Article-Nr.	L	Colour	Availability
137	13720	20 ft	white	On request

20 ft

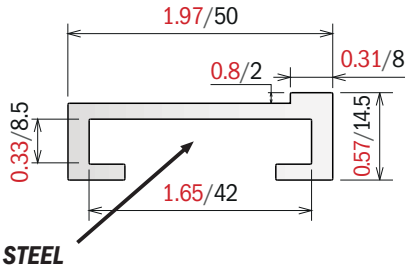

USE WITH STEEL 40x8

Material:
Stainless Steel or Aluminum

117 M-Profile

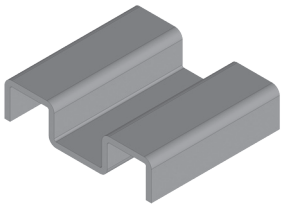

Part	Article-Nr.	L	A in-mm	Material	Availability
117	11701C	10 ft	0.31/8	AISI 304	Stock item
117	11701	20 ft	0.31/8	AISI 304	On request
117	11702C	10 ft	0.39/10	AISI 304	Stock item
117	11702	20 ft	0.39/10	AISI 304	On request
117	11703C	10 ft	0.23/6	AISI 304	Stock item
117	11703	20 ft	0.23/6	AISI 304	On request

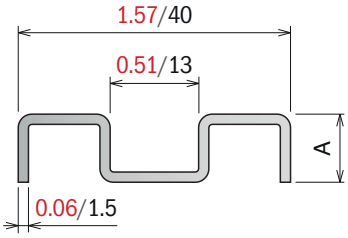

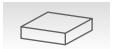
10/20 ft

1055 Stainless steel guide

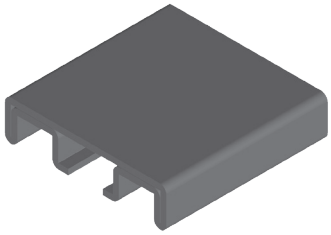

Part	Article-Nr.	L	A in-mm	B in-mm	Material	Availability
1055	105501C	10 ft	1.57/40	0.31/8	AISI 304	Stock item
1055	105501	20 ft	1.57/40	0.31/8	AISI 304	On request

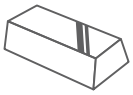
Stainless steel AISI 304

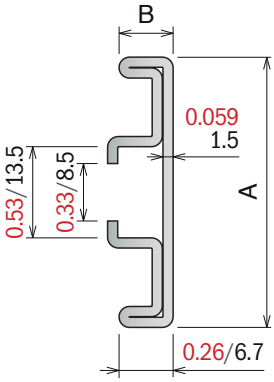

1.57x0.31/40x8

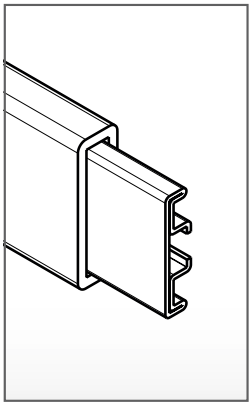

Used with part:
13701C / 13701BC
18914C / 18914
18301C / 18301

159 Aluminum guide

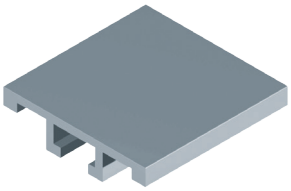

Part	Article-Nr.	L	Material	Availability
159	15901C	10 ft	Aluminium	Stock item
159	15901	20 ft	Aluminium	On request

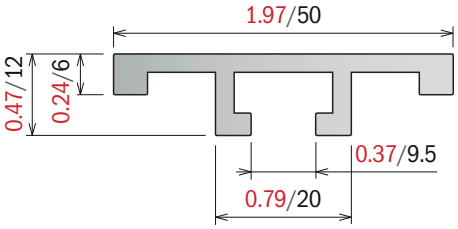

Fixing screw:
M8 hex.head
or **PART 362**

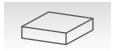
10/20 ft

Material:
Polyethylene UHMW-PE with molecular density 5,600,000 g/mol
Linear expansion coefficient: 1.1×10^{-4} °F^{-1} (2×10^{-4} °C^{-1})
Operating temperature: -40 to 176°F (-40 to +80°C)

1063

Side guide rail

Part	Article-Nr.	L	For plate	Colour	Availability
1063	106301C	10 ft	1.18x0.16/30x4	black	Stock item

10 ft

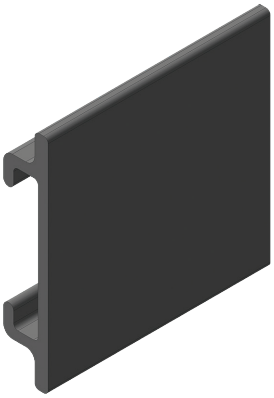

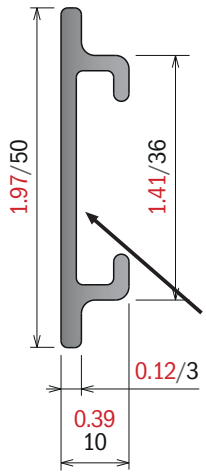

USE WITH STEEL 30x4

1064

Side guide rail

Part	Article-Nr.	L	For plate	Colour	Availability
1064	106401C	10 ft	2.16x0.16/55x4	black	Stock item

10 ft

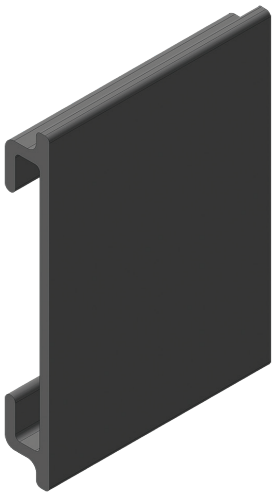

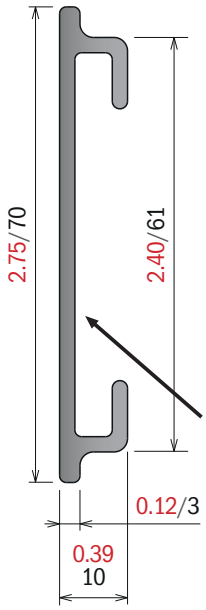

USE WITH STEEL 55x4

Material: Polyethylene UHMW-PE with molecular density 9,200,000 g/mo. **BluLub**® new material with reduced coefficient of friction and higher wear resistence. BluLub complies with the code of Federal Regulations of FDA. Linear expansion coefficient: $1.1x10^{-4}$ °F^{-1} ($2x10^{-4}$ °C^{-1}) Operating temperature: -40 to 176°F (-40 to +80°C)

158 Side guide rail

Part	Article-Nr.	L	A in-mm	Material	Availability
158	15800C	10 ft	2.36/60	grey	Stock item
158	15800	20 ft	2.36/60	grey	On request
158	15800BC	10 ft	2.36/60	BluLub	Stock item
158	15800B	20 ft	2.36/60	BluLub	On request

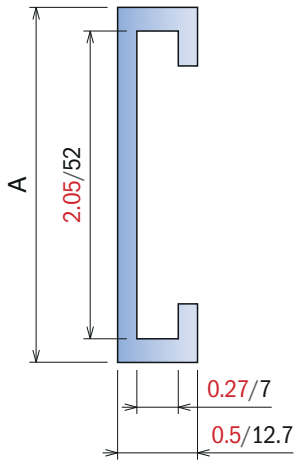

Fixing with:

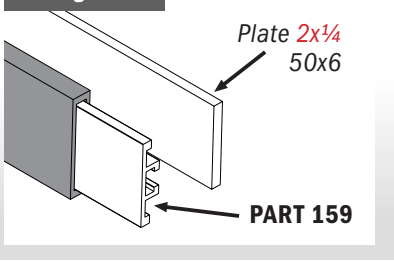

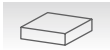

10/20 ft

Side guide rail

Part	Article-Nr.	L	A in-mm	Material	Availability
158	15801C	10 ft	3.54/90	grey	On request
158	15801	20 ft	3.54/90	grey	On request
158	15801BC	10 ft	3.54/90	BluLub	Stock item
158	15801B	20 ft	3.54/90	BluLub	On request
158	15802C	10 ft	3.94/100	grey	On request
158	15802	20 ft	3.94/100	grey	On request
158	15802BC	10 ft	3.94/100	BluLub	Stock item
158	15802B	20 ft	3.94/100	BluLub	On request
158	15803C	10 ft	4.72/120	grey	On request
158	15803	20 ft	4.72/120	grey	On request
158	15803BC	10 ft	4.72/120	BluLub	Stock item
158	15803B	20 ft	4.72/120	BluLub	On request

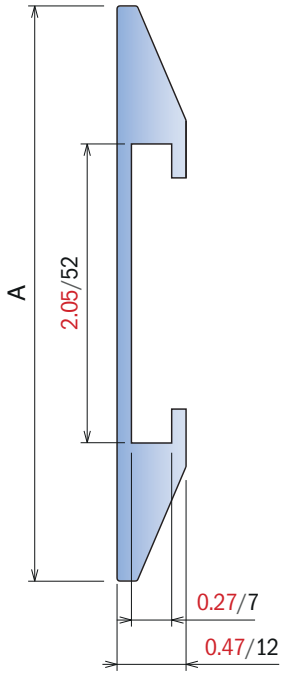

Fixing with:

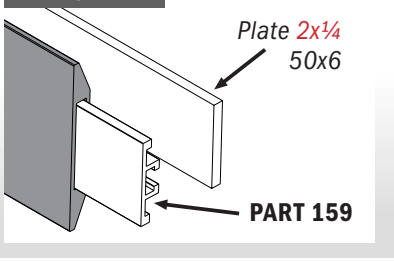

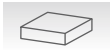

10/20 ft

182 Side guide rail

Part	Article-Nr.	L	For plate	Material	Availability
182	18204C	10 ft	2x¼/50x6	grey	On request
182	18214C	10 ft	1⅝ x5/16/40x8	grey	On request
182	18200BC	10 ft	2x¼/50x6	BluLub	On request
182	18210BC	10 ft	1⅝ x5/16/40x8	BluLub	On request

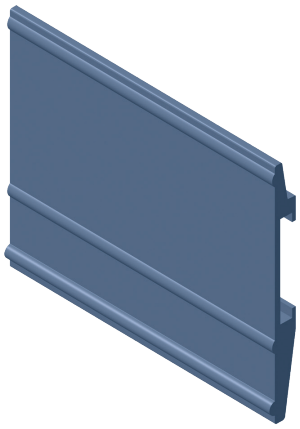

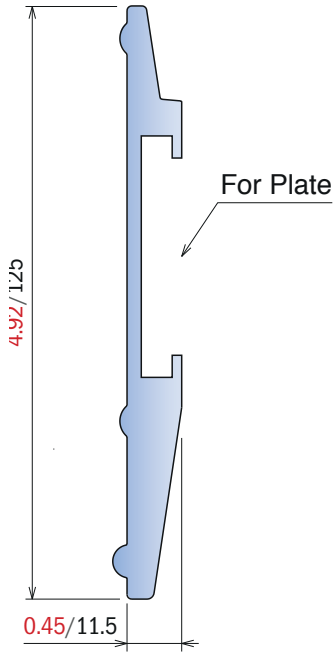

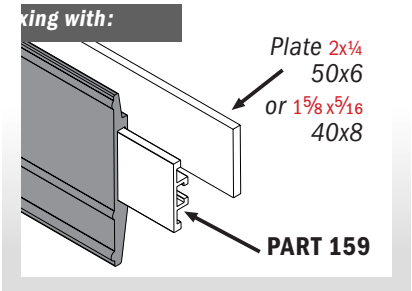

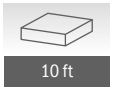
10 ft

1065 Side guide rail

Part	Article-Nr.	L	For plate	Material	Availability
1065	106504C	10 ft	2x¼/50x6	grey	On request
1065	106500BC	10 ft	2x¼/50x6	BluLub	On request

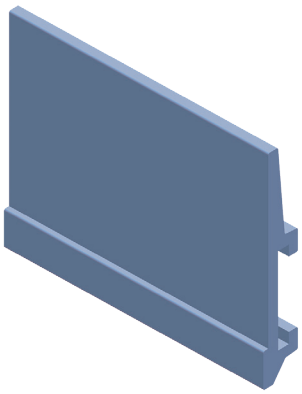

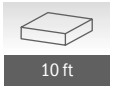
10 ft

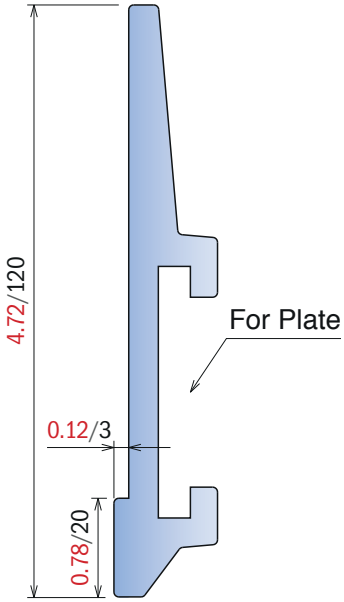

Material: Polyethylene UHMW-PE with molecular density 9,200,000 g/mo. **BluLub**® new material with reduced coefficient of friction and higher wear resistence. BluLub complies with the code of Federal Regulations of FDA. Linear expansion coefficient: $1.1x10^{-4}$ °F^{-1} ($2x10^{-4}$ °C^{-1}) Operating temperature: -40 to 176°F (-40 to +80°C)

189 Side guide rail

Part	Article-Nr.	L	For plate	Material	Availability
189	18904C	10 ft	2x¼/50x6	grey	On request
189	18900BC	10 ft	2x¼/50x6	BluLub	Stock item
189	18914C	10 ft	1⅝ x5⁄16/40x8	grey	On request
189	18910BC	10 ft	1⅝ x5⁄16/40x8	BluLub	Stock item

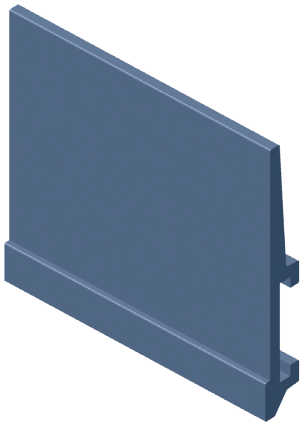

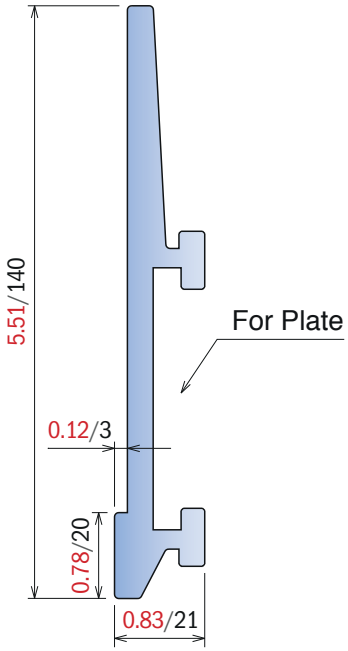

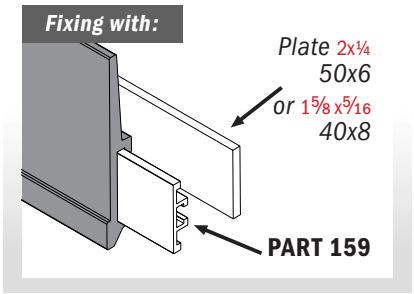

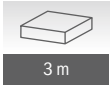
3 m

Side guide rail

Part	Article-Nr.	L	A in-mm	For plate	Material	Availability
189	18964C	10 ft	0.79/20	2.5x ¼/60x6	grey	Stock item
189	18960BC	10 ft	0.79/20	2.5x ¼/60x6	BluLub	Stock item
189	18974C	10 ft	1.57/40	2.5x ¼/60x6	grey	Stock item
189	18970BC	10 ft	1.57/40	2.5x ¼/60x6	BluLub	Stock item
189	18944C	10 ft	1.57/40	2.5x ⅕/60x5	grey	Stock item
189	18940BC	10 ft	1.57/40	2.5x ⅕/60x5	BluLub	Stock item

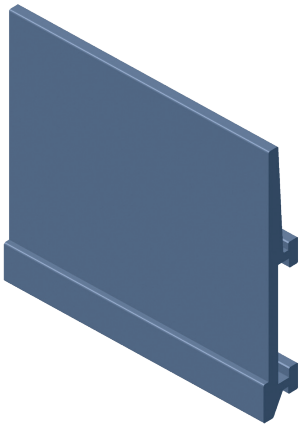

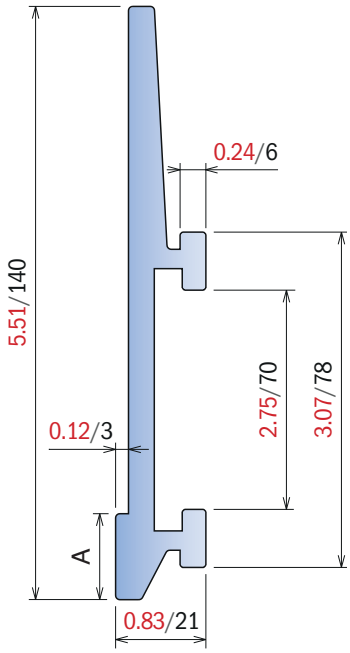

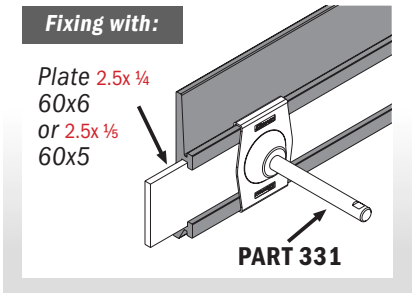

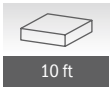
10 ft

Material: Polyethylene UHMW-PE with molecular density 9,200,000 g/mo. ***BluLub®*** *new material with reduced coefficient of friction and higher wear resistence. BluLub complies with the code of Federal Regulations of FDA. Linear expansion coefficient: 1.1x10⁻⁴ °F⁻¹ (2x10⁻⁴ °C⁻¹) Operating temperature: -40 to 176°F (-40 to +80°C)*

193

Side guide rail

Part	Article-Nr.	L	For plate	Material	Availability
193	19364C	10 ft	2 5x ¼/60x6	grey	Stock item
193	19360BC	10 ft	2 5x ¼/60x6	BluLub	Stock item

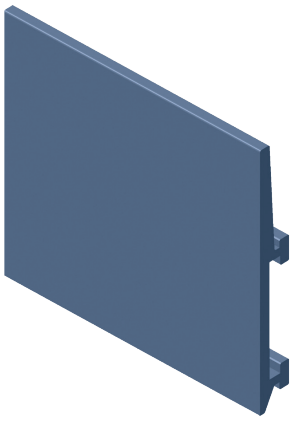

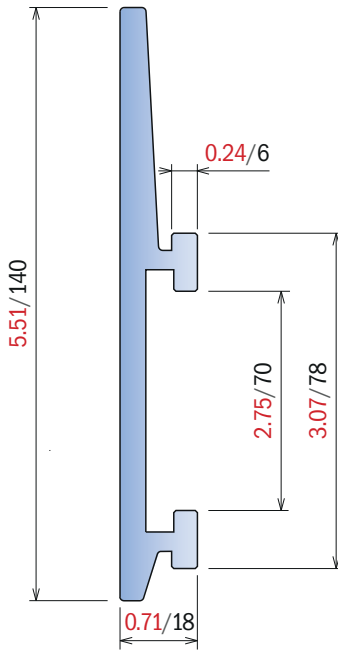

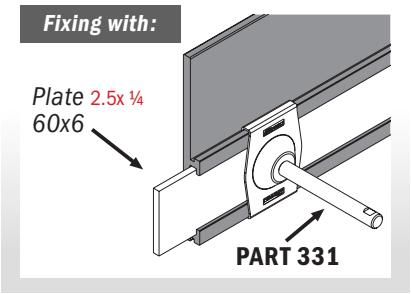

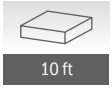

187

Side guide rail

Part	Article-Nr.	L	A in-mm	For plate	Material	Availability
187	18764C	10 ft	0.47/12	2 5x ¼/60x6	grey	Stock item
187	18760BC	10 ft	0.47/12	2 5x ¼/60x6	BluLub	Stock item
187	18774C	10 ft	0.79/20	2 5x ¼/60x6	grey	Stock item
187	18770BC	10 ft	0.79/20	2 5x ¼/60x6	BluLub	Stock item
187	18784C	10 ft	1.57/40	2 5x ¼/60x6	grey	Stock item
187	18780BC	10 ft	1.57/40	2 5x ¼/60x6	BluLub	Stock item

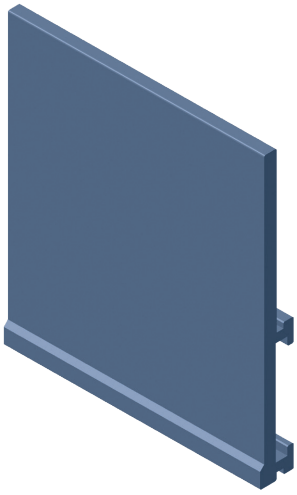

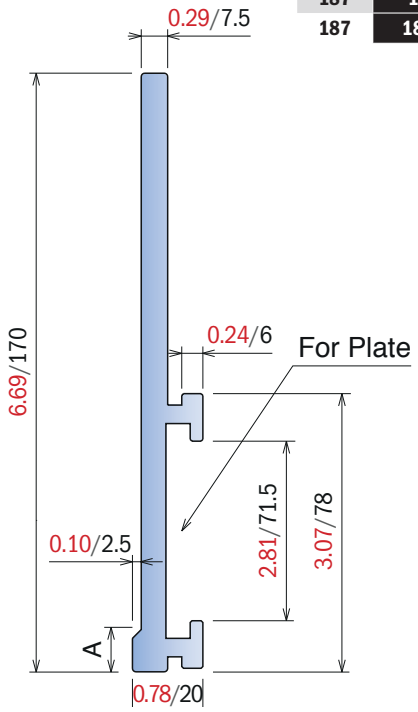

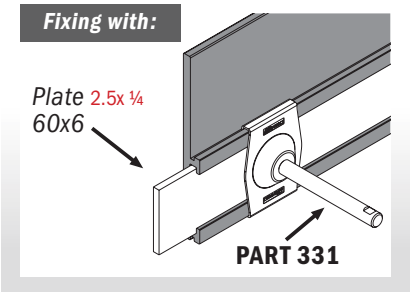

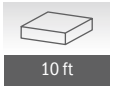

Material: Polyethylene UHMW-PE with molecular density 9,200,000 g/mo. **BluLub**® new material with reduced coefficient of friction and higher wear resistence. BluLub complies with the code of Federal Regulations of FDA. Linear expansion coefficient: $1.1x10^{-4}$ °F^{-1} ($2x10^{-4}$ °C^{-1}) Operating temperature: -40 to 176°F (-40 to +80°C)

1056

Side guide rail

Part	Article-Nr.	L	A in-mm	For plate	Material	Availability
1056	105664C	10 ft	0.39/10	2.5x ¼/60x6	grey	Stock item
1056	105660BC	10 ft	0.39/10	2.5x ¼/60x6	BluLub	Stock item
1056	105674C	10 ft	1.57/40	2.5x ¼/60x6	grey	Stock item
1056	105670BC	10 ft	1.57/40	2.5x ¼/60x6	BluLub	Stock item

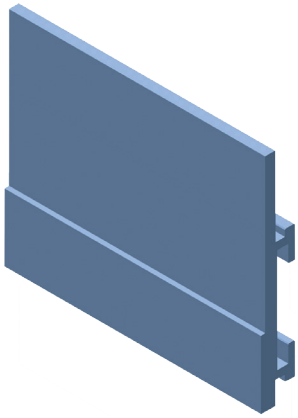

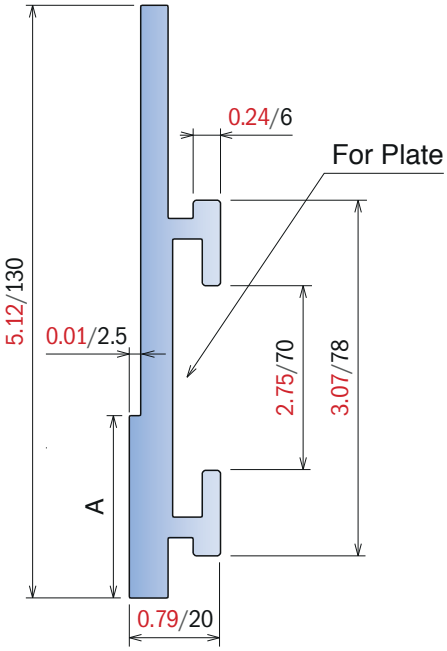

Fixing with:

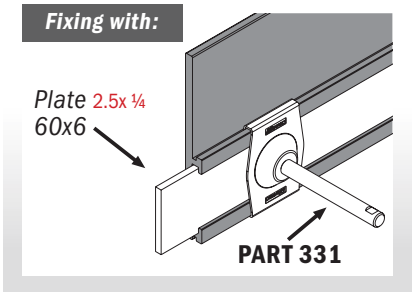

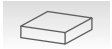

10 ft

1057

Side guide rail

Part	Article-Nr.	L	For plate	Material	Availability
1057	105764C	10 ft	2.5x ¼/60x6	grey	Stock item
1057	105760BC	10 ft	2.5x ¼/60x6	BluLub	Stock item

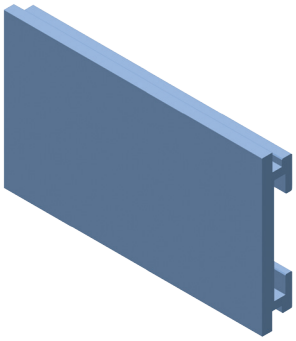

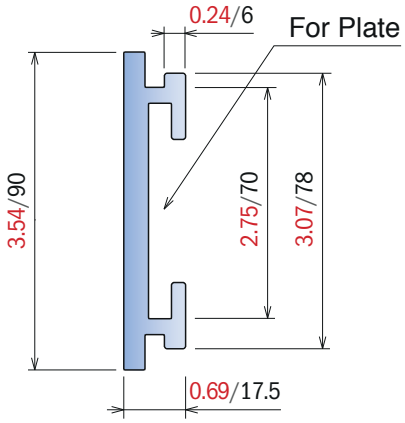

Fixing with:

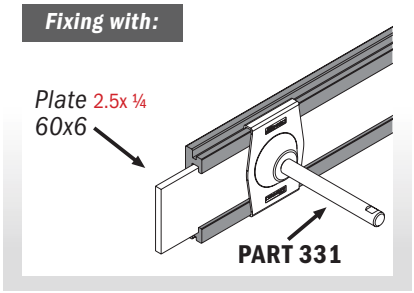

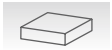

10 ft

Material: Polyethylene UHMW-PE with molecular density 9,200,000 g/mo. ***BluLub®*** *new material with reduced coefficient of friction and higher wear resistence. BluLub complies with the code of Federal Regulations of FDA. Linear expansion coefficient: 1.1x10⁻⁴ °F⁻¹ (2x10⁻⁴ °C⁻¹) Operating temperature: -40 to 176°F (-40 to +80°C)*

186 *Side guide rail*

Part	Article-Nr.	L	For plate	Material	Availability
186	18604C	10 ft	2x¼/50x6	grey	On request
186	18600BC	10 ft	2x¼/50x6	BluLub	On request

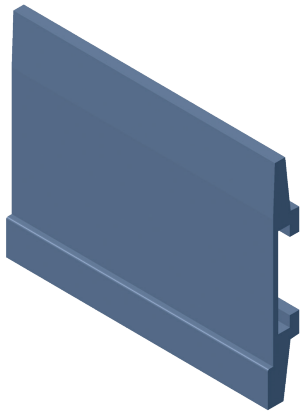

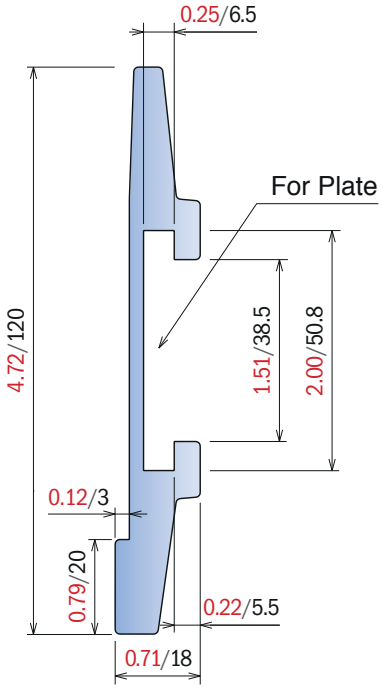

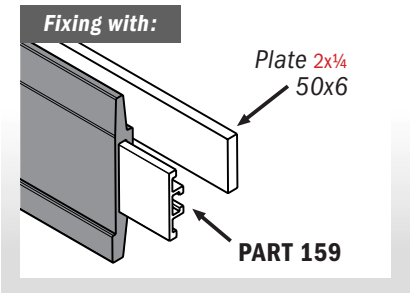

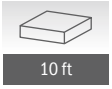
10 ft

1061 *Side guide rail*

Part	Article-Nr.	L	For plate	Material	Availability
1061	106104C	10 ft	2.5x ¼/60x6	grey	On request
1061	106104BC	10 ft	2.5x ¼/60x6	BluLub	On request

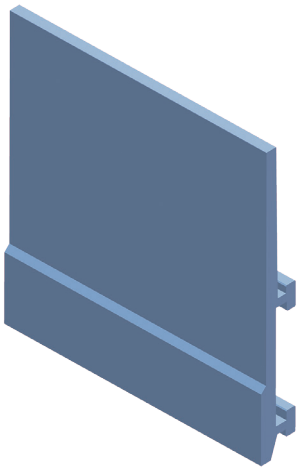

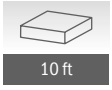
10 ft

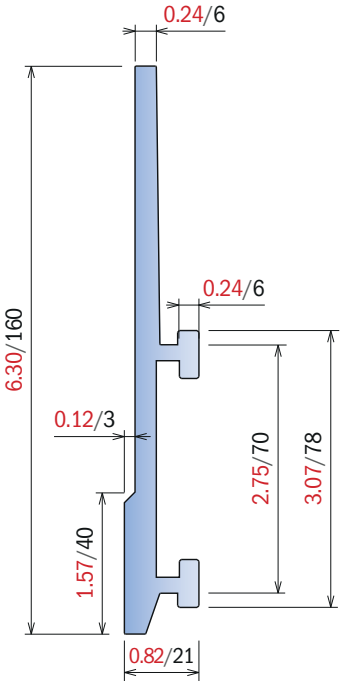

Material: Polyethylene UHMW-PE with molecular density 9,200,000 g/mo. **BluLub**® new material with reduced coefficient of friction and higher wear resistence. BluLub complies with the code of Federal Regulations of FDA. Linear expansion coefficient: $1.1x10^{-4}$ °F^{-1} ($2x10^{-4}$ °C^{-1}) Operating temperature: -40 to 176°F (-40 to +80°C)

166 Round profile for steel rods

Part	Article-Nr.	A in	B in	C in	Colour	Availability
166	16651	0.15	0.25	0.02	white	Stock item
166	16652	0.18	0.28	0.02	white	Stock item
166	16653	0.24	0.34	0.04	white	Stock item
166	16654	0.30	0.42	0.06	white	Stock item

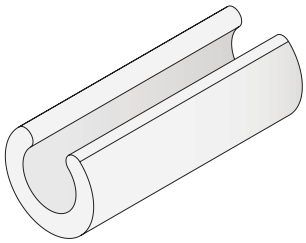

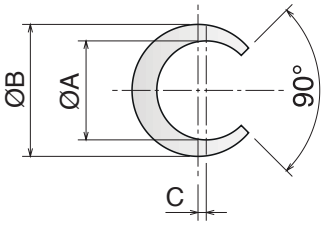

100 ft

1039 Half round profile for steel rods

Part	Article-Nr.	L	A in	B in	Colour	Availability
1039	103903C	10 ft	0.26	0.34	white	Stock item
1039	103903	20 ft	0.26	0.34	white	On request
1039	103913C	10 ft	0.33	0.41	white	Stock item
1039	103913	20 ft	0.33	0.41	white	On request

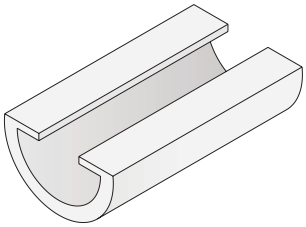

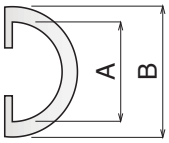

10/20 ft

100 ft

183 Side guide rail

Part	Article-Nr.	L	Colour	Availability
183	18301C	10 ft	black	Stock item
183	18301	20 ft	black	On request
183	18301BC	10 ft	BluLub	Stock item
183	18301B	20 ft	BluLub	On request

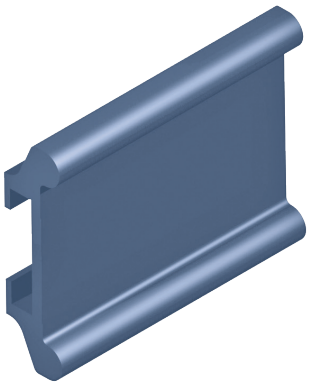

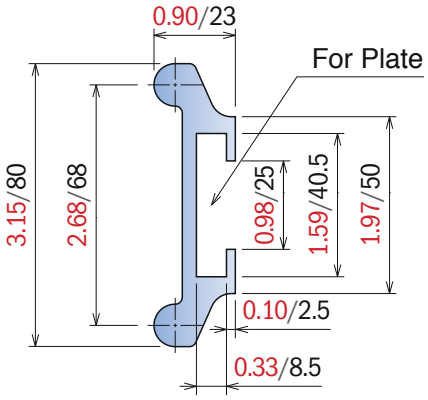

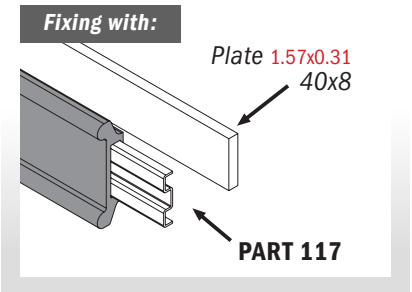

10/20 ft

113

Central wear strip shoe

Part	Article-Nr.	Colour	Availability
113	11301	black	On request

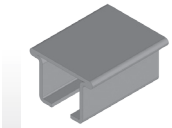

Used with SS Profile:
PART 112
Pag 211

WITHOUT NOSE

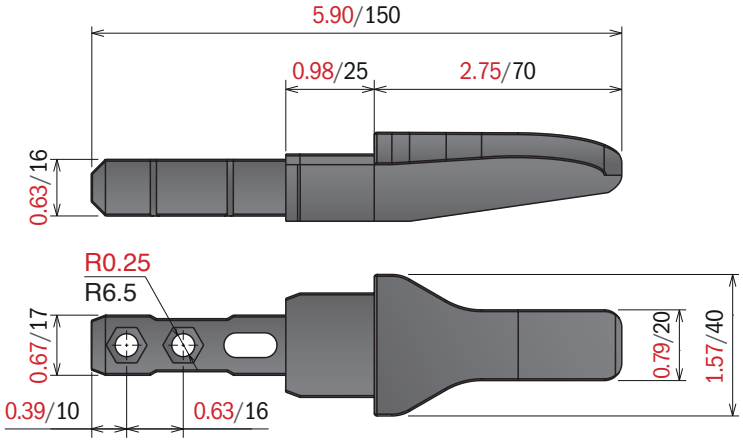

Part	Article-Nr.	Colour	Availability
113	11302	black	On request

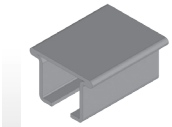

Used with SS Profile:
PART 112
Pag 211

WITH NOSE

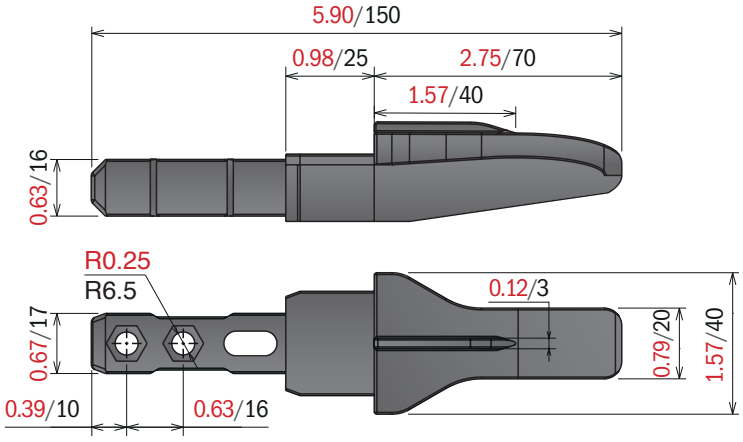

114

Fixing clamp

Part	Article-Nr.	A in-mm	B in-mm	C in-mm	Colour	Availability
114	11401	0.39/10	0.24/6,2	0.18/4,5	black	On request
114	11402	0.51/13	0.32/8,2	0.24/6	black	On request

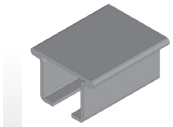

Used with SS Profile:
PART 112
Pag 211

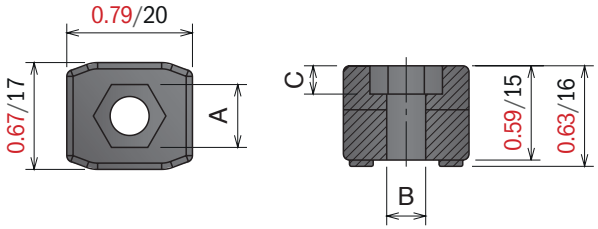

Material:
Polyamide reinforced

116 Side transfer guide shoe

Part	Article-Nr.	Colour	Availability
116	11601	black	On request

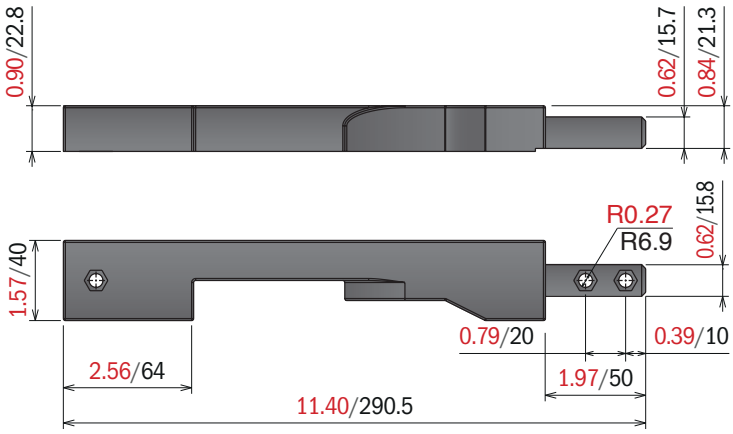

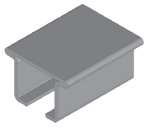

Used with SS Profile:
PART 112
Pag 211

LEFT VERSION

Part	Article-Nr.	Colour	Availability
116	11602	black	On request

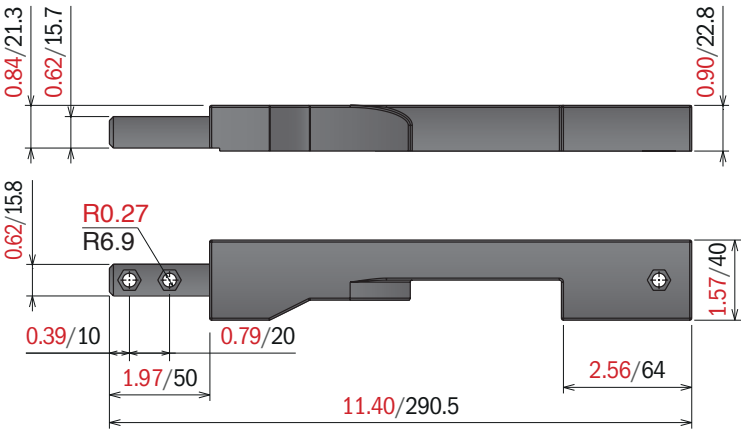

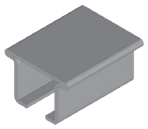

Used with SS Profile:
PART 112
Pag 211

RIGHT VERSION

115 Connecting element

Part	Article-Nr.	A in-mm	B in-mm	C in-mm	Colour	Availability
115	11501	0.39/10	0.24/6,2	0.18/4,5	black	On request
115	11502	0.51/13	0.32/8,2	0.24/6	black	On request

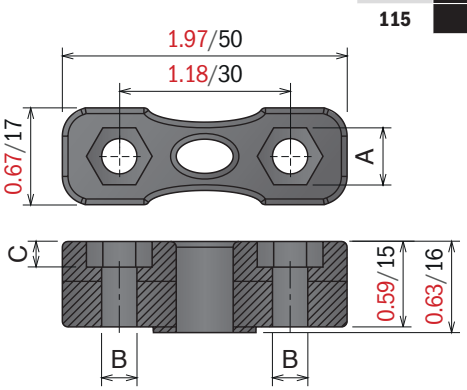

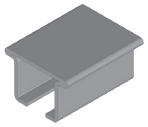

Used with SS Profile:
PART 112
Pag 211

Movex

247

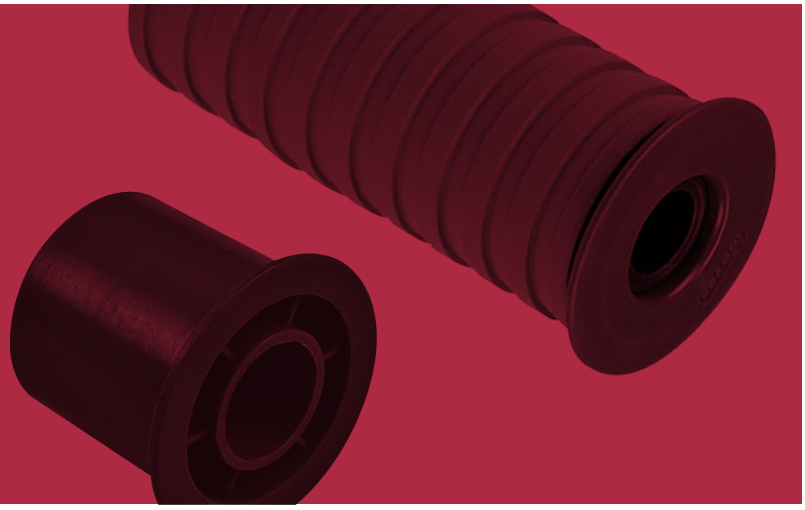

Return components

219 - Ø1.57”

Pag 248

220 - Ø1.85”

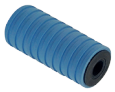

Pag 248

201 - Ø1.97”

Pag 249

203 - Ø2.24

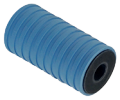

Pag 249

202 - Ø2.36

Pag 250

204 - Ø2.64

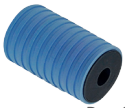

Pag 250

222 - Ø1.57”

Pag 251

223 - Ø1.85”

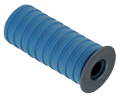

Pag 251

224 - Ø1.97”

Pag 252

225 - Ø2.24

Pag 252

226 - Ø2.36

Pag 253

227 - Ø2.64

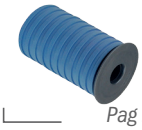

Pag 253

208

Pag 254

209

Pag 254

232

Pag 255

210

Pag 255

211

Pag 255

207

Pag 256

233

Pag 256

213

Pag 256

221

Pag 257

215

Pag 257

230

Pag 258

231

Pag 258

Material:
Rullino: *Polyethylene (PE)*
Rubber: TPR

219

Return roller D= 1.57" / 40 mm

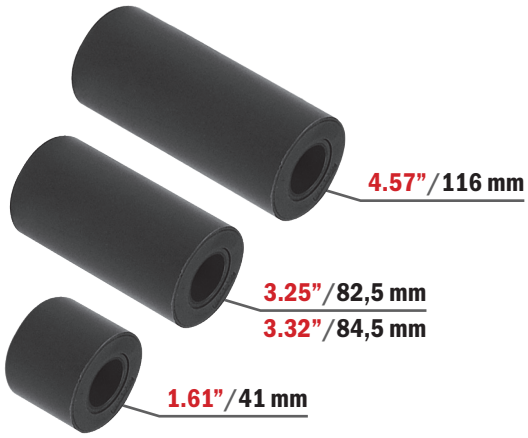

Part	Article-Nr.	L in-mm	ØA
219	21951Y	1.61/41	5/8
219	21953Y	1.61/41	3/4
219	21901Y	3.25/82,5	5/8
219	21903Y	3.25/82,5	3/4
219	21911Y	3.32/84,5	5/8
219	21913Y	3.32/84,5	3/4
219	21961Y	4.57/116	5/8
219	21963Y	4.57/116	3/4

Watertight

Range Extension

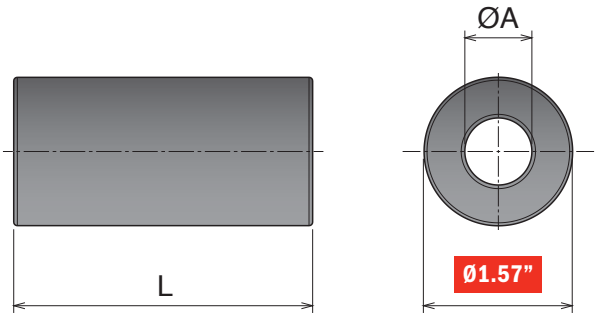

220

Return roller with rubber D= 1.85"/ 47 mm

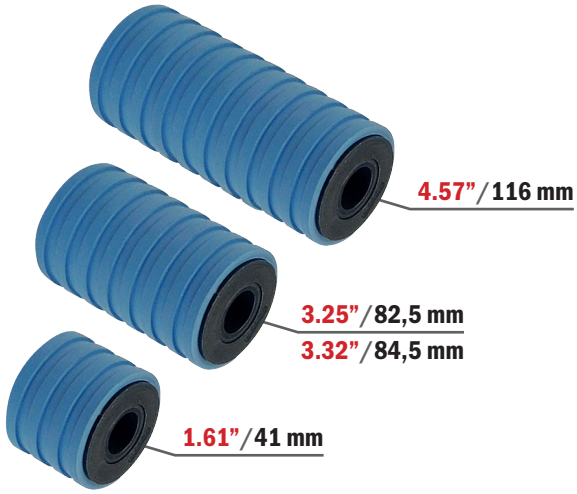

Part	Article-Nr.	L in-mm	ØA
220	22051Y	1.61/41	5/8
220	22053Y	1.61/41	3/4
220	22001Y	3.25/82,5	5/8
220	22003Y	3.25/82,5	3/4
220	22011Y	3.32/84,5	5/8
220	22013Y	3.32/84,5	3/4
220	22061Y	4.57/116	5/8
220	22063Y	4.57/116	3/4

Watertight

Range Extension

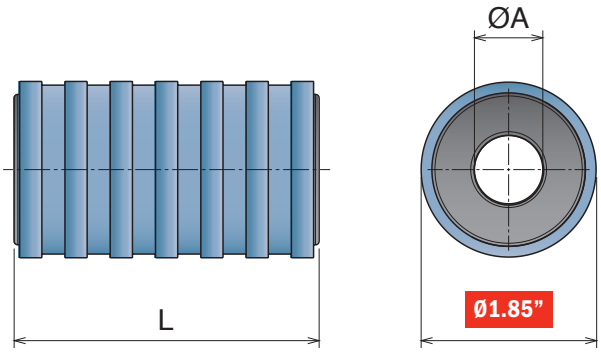

201

Return roller D= 1.97"/ 50 mm

Part	Article-Nr.	L in-mm	ØA
201	20151Y	1.61/41	5/8
201	20153Y	1.61/41	3/4
201	20101Y	3.25/82,5	5/8
201	20103Y	3.25/82,5	3/4
201	20111Y	3.32/84,5	5/8
201	20113Y	3.32/84,5	3/4
201	20161Y	4.57/116	5/8
201	20163Y	4.57/116	3/4

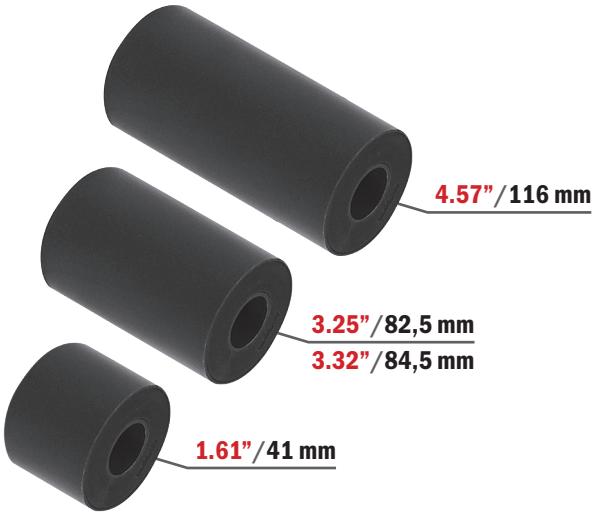

Watertight

Range Extension

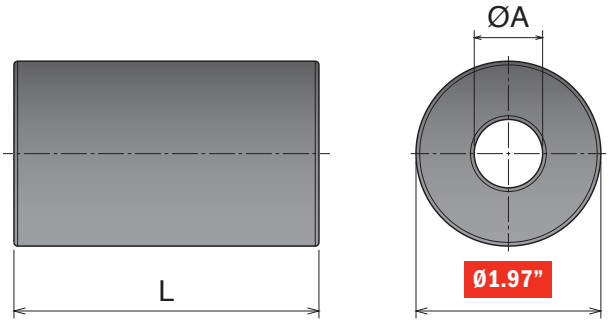

203

Return roller with rubber D= 2.24"/ 57 mm

Part	Article-Nr.	L in-mm	ØA
203	20351Y	1.61/41	5/8
203	20353Y	1.61/41	3/4
203	20301Y	3.25/82,5	5/8
203	20303Y	3.25/82,5	3/4
203	20311Y	3.32/84,5	5/8
203	20313Y	3.32/84,5	3/4
203	20361Y	4.57/116	5/8
203	20363Y	4.57/116	3/4

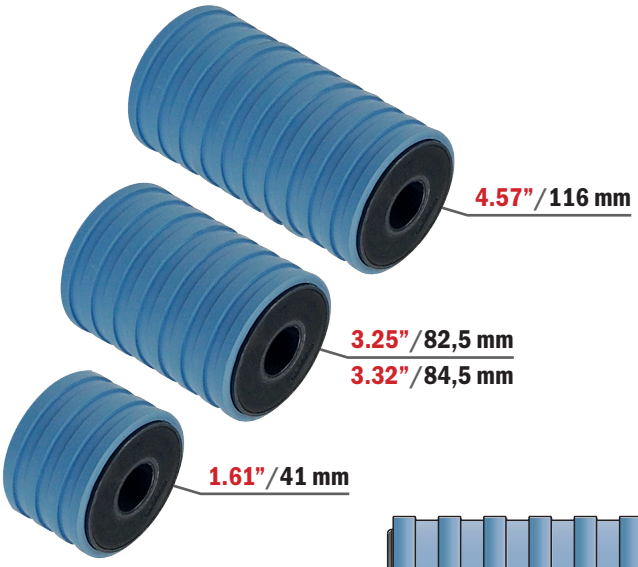

Watertight

Range Extension

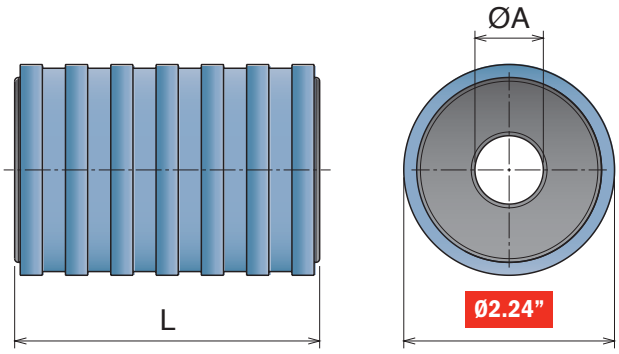

Material:
Rullino: *Polyethylene (PE)*
Rubber: TPR

202

Return roller D=2.36”/ 60 mm

Part	Article-Nr.	L in-mm	ØA
202	20251Y	1.61/41	5/8
202	20253Y	1.61/41	3/4
202	20201Y	3.25/82,5	5/8
202	20203Y	3.25/82,5	3/4
202	20261Y	4.57/116	5/8
202	20263Y	4.57/116	3/4

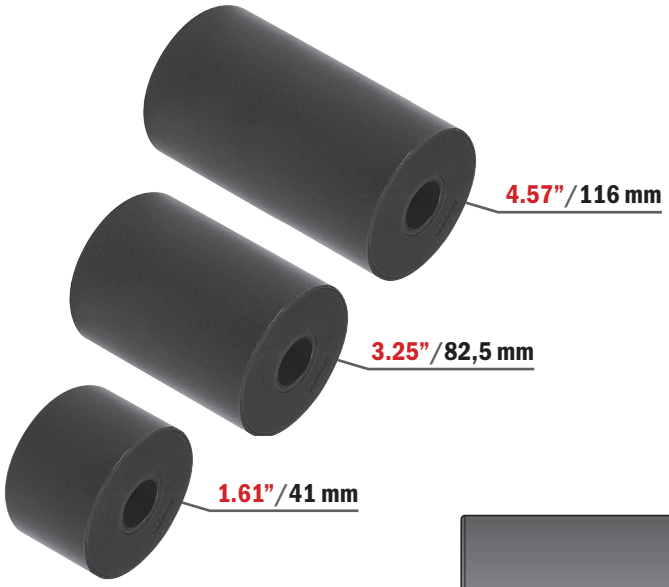

Watertight

Range Extension

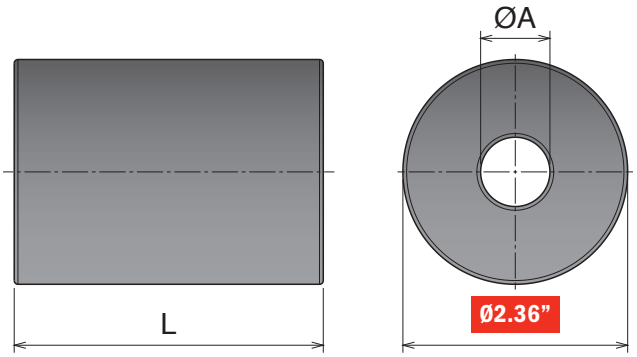

204

Return roller with rubber D=2.64”/ 67 mm

Part	Article-Nr.	L in-mm	ØA
204	20451Y	1.61/41	5/8
204	20453Y	1.61/41	3/4
204	20401Y	3.25/82,5	5/8
204	20403Y	3.25/82,5	3/4
204	20461Y	4.57/116	5/8
204	20463Y	4.57/116	3/4

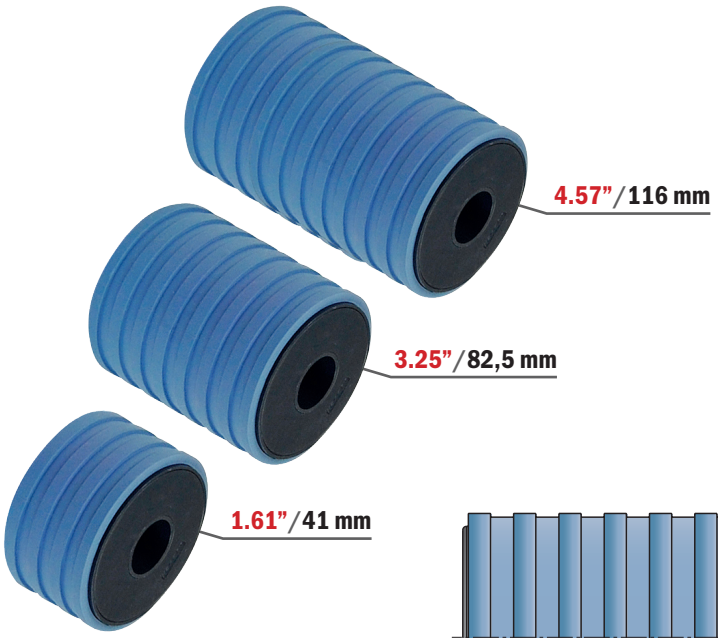

Watertight

Range Extension

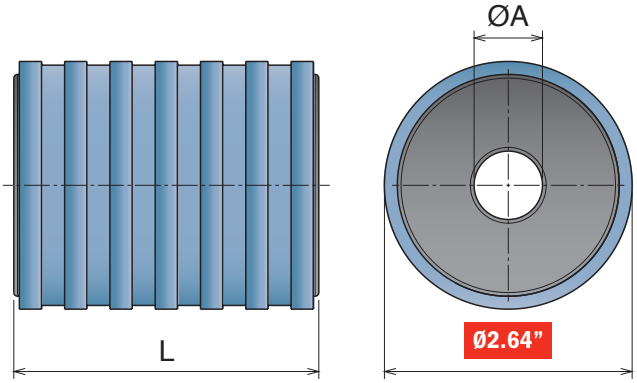

222

Return roller with flange D=1.57”/ 40 mm

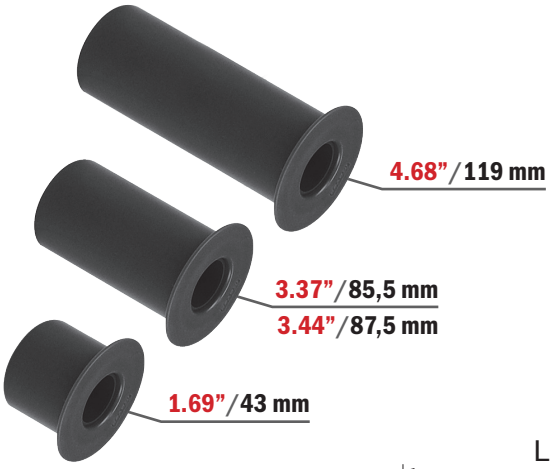

Part	Article-Nr.	L in-mm	ØA
222	22251Y	1.69/43	5/8
222	22253Y	1.69/43	3/4
222	22201Y	3.37/85,5	5/8
222	22203Y	3.37/85,5	3/4
222	22211Y	3.44/87,5	5/8
222	22213Y	3.44/87,5	3/4
222	22261Y	4.68/119	5/8
222	22263Y	4.68/119	3/4

Watertight

Range Extension

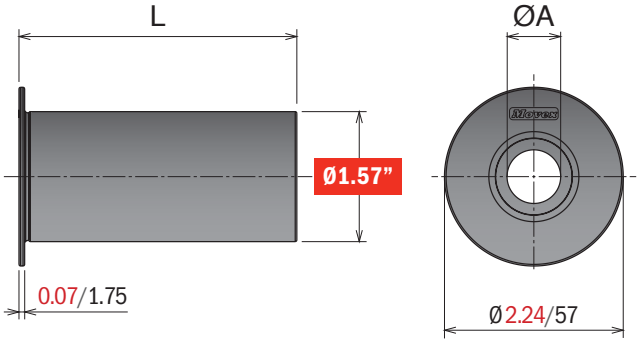

223

Return roller with flange and rubber D=1.85”/ 47 mm

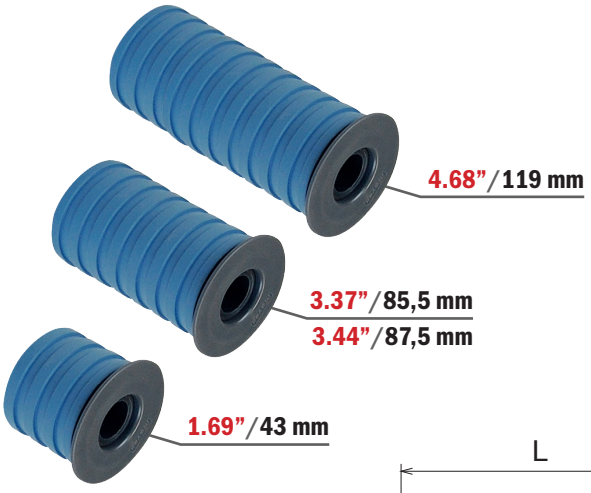

Part	Article-Nr.	L in-mm	ØA
223	22351Y	1.69/43	5/8
223	22353Y	1.69/43	3/4
223	22301Y	3.37/85,5	5/8
223	22303Y	3.37/85,5	3/4
223	22311Y	3.44/87,5	5/8
223	22313Y	3.44/87,5	3/4
223	22361Y	4.68/119	5/8
223	22363Y	4.68/119	3/4

Watertight

Range Extension

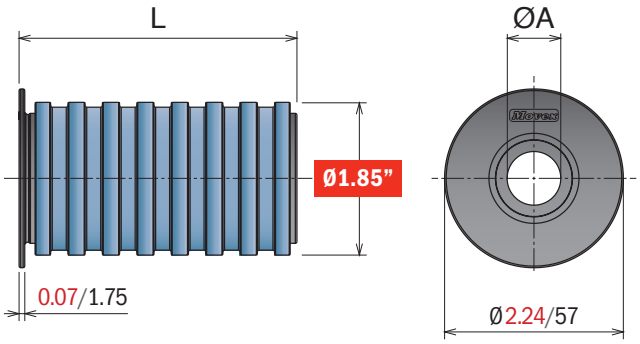

Material:
Rullino: *Polyethylene (PE)*
Rubber: TPR

224

Return roller with flange D=1.97”/ 50 mm

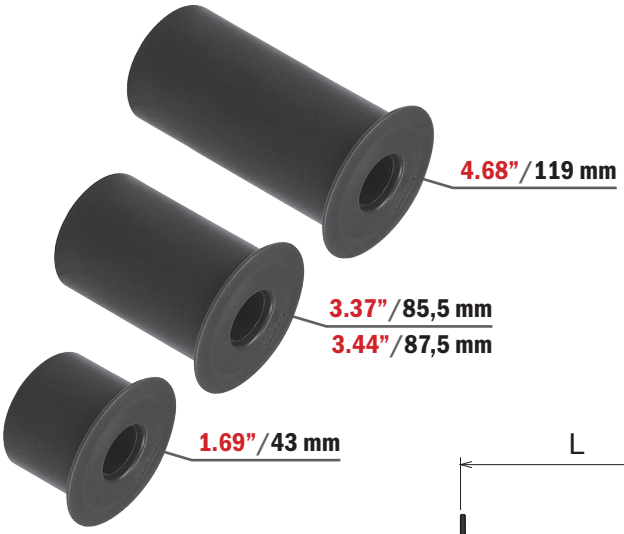

Part	Article-Nr.	L in-mm	ØA
224	22451Y	1.69/43	5/8
224	22453Y	1.69/43	3/4
224	22401Y	3.37/85,5	5/8
224	22403Y	3.37/85,5	3/4
224	22411Y	3.44/87,5	5/8
224	22413Y	3.44/87,5	3/4
224	22461Y	4.68/119	5/8
224	22463Y	4.68/119	3/4

Watertight

Range Extension

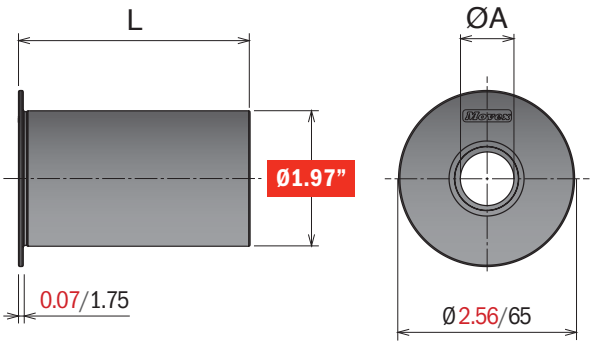

225

Return roller with flange and rubber D=2.24”/ 57 mm

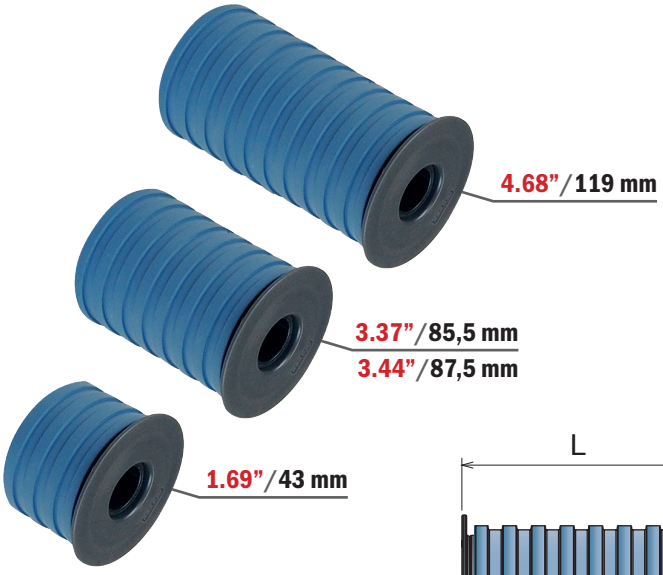

Part	Article-Nr.	L in-mm	ØA
225	22551Y	1.69/43	5/8
225	22553Y	1.69/43	3/4
225	22501Y	3.37/85,5	5/8
225	22503Y	3.37/85,5	3/4
225	22511Y	3.44/87,5	5/8
225	22513Y	3.44/87,5	3/4
225	22561Y	4.68/119	5/8
225	22563Y	4.68/119	3/4

Watertight

Range Extension

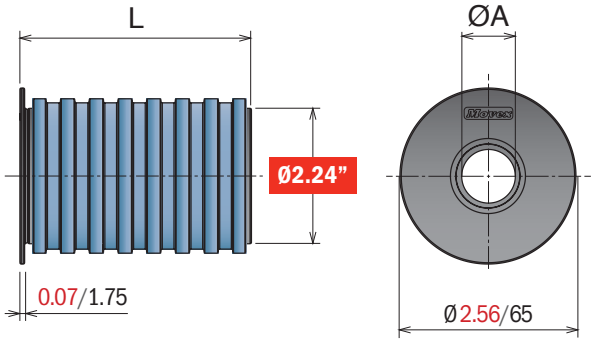

Material:
Rullino: *Polyethylene (PE)*
Rubber: TPR

226

Return roller with flange D=2.36”/ 60 mm

Part	Article-Nr.	L in-mm	ØA
226	22651Y	1.69/43	5/8
226	22653Y	1.69/43	3/4
226	22601Y	3.37/85,5	5/8
226	22603Y	3.37/85,5	3/4
226	22661Y	4.68/119	5/8
226	22663Y	4.68/119	3/4

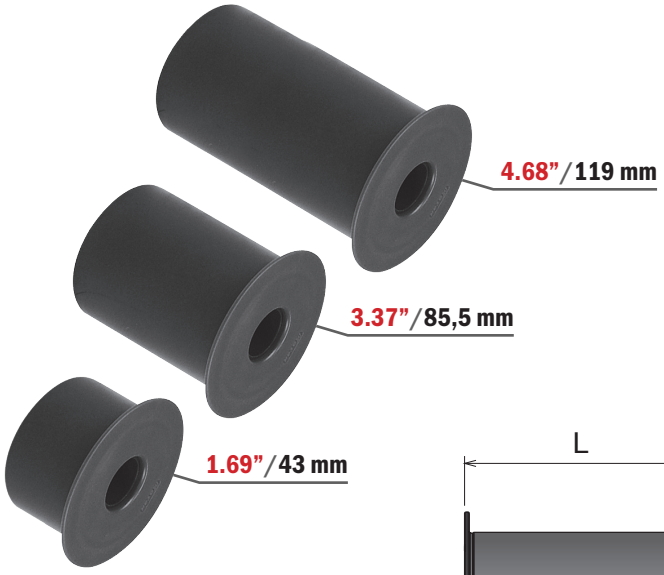

Watertight

Range Extension

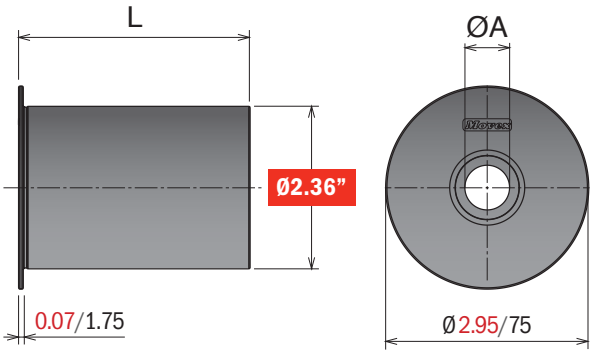

227

Return roller with flange and rubber D=2.64”/ 67 mm

Part	Article-Nr.	L in-mm	ØA
227	22751Y	1.69/43	5/8
227	22753Y	1.69/43	3/4
227	22701Y	3.37/85,5	5/8
227	22703Y	3.37/85,5	3/4
227	22761Y	4.57/116	5/8
227	22763Y	4.57/116	3/4

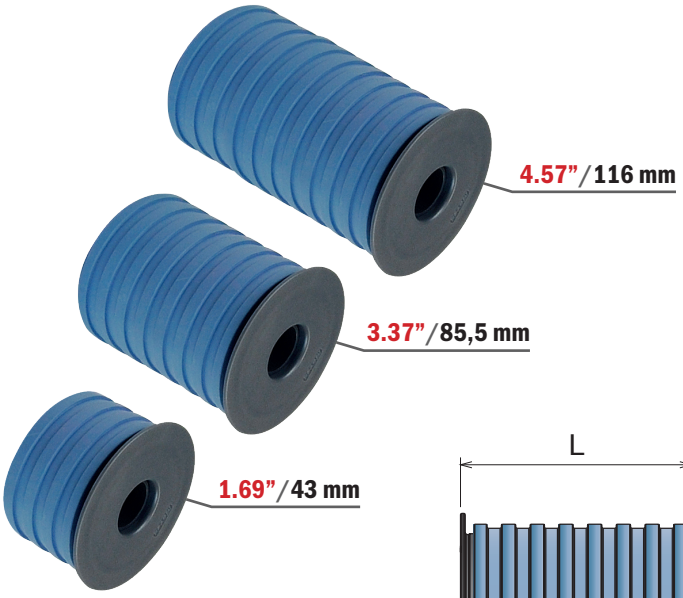

Watertight

Range Extension

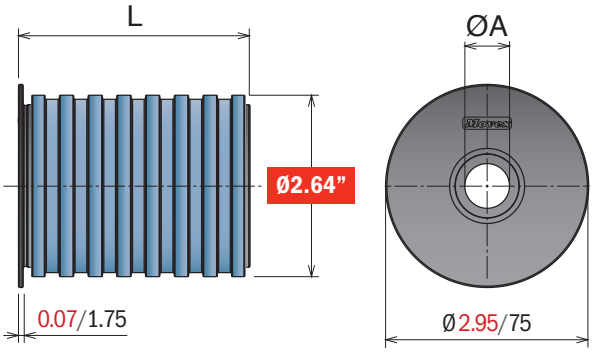

Material:
Rullino: *Polyethylene (PE)*

208

Return roller with flange D=1.67"/ 42.5 mm

Part	Article-Nr.	ØA
208	20801	5/8
208	20803	3/4

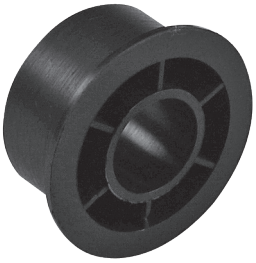

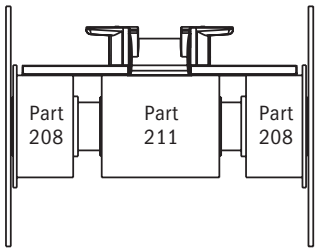

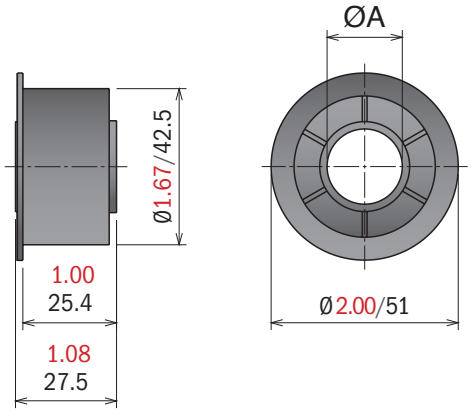

209

Return roller with flange D=1.69"/ 43 mm

Part	Article-Nr.	ØA
209	20901	5/8
209	20903	3/4

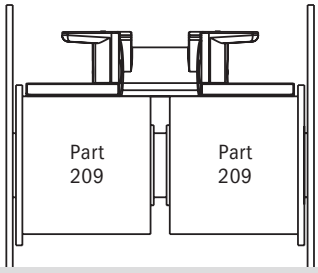

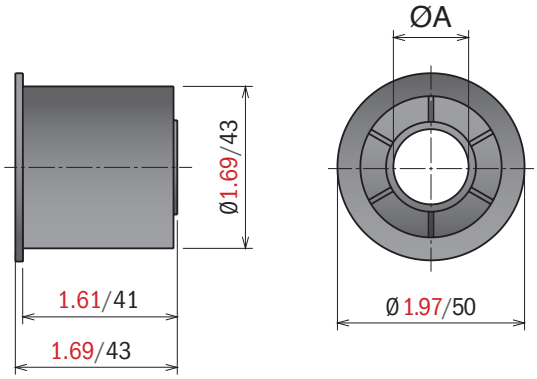

232

Return roller with flange Ø68

Max recommended tightening torque: 0,3 N mt

Part	Article-Nr.	ØA
232	23202	5/8
232	23204	3/4

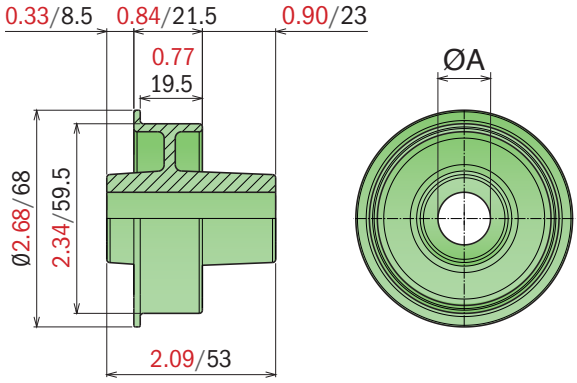

210

Double return roller

Part	Article-Nr.	ØA
210	21001	5/8
210	21003	3/4

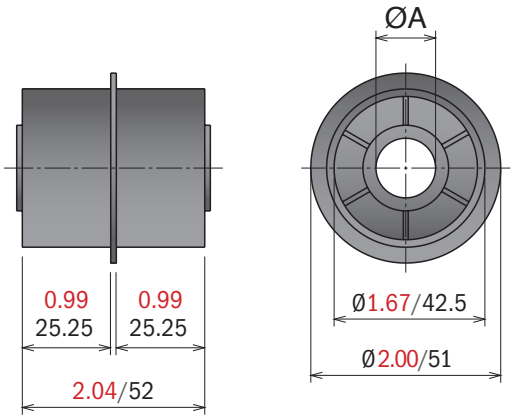

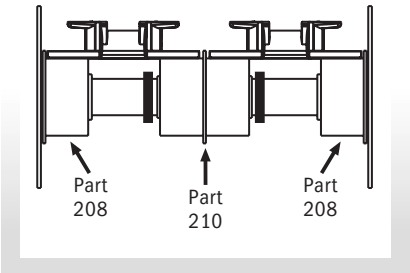

211

Return roller D=1.67"/ 42.5 mm

Part	Article-Nr.	ØA
211	21101	5/8
211	21103	3/4

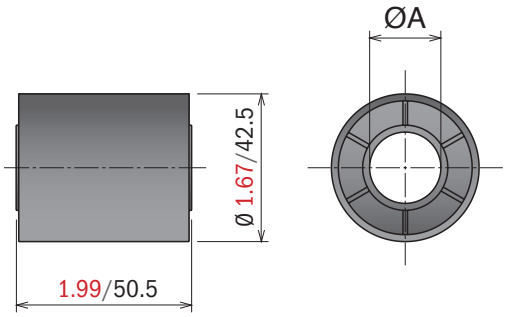

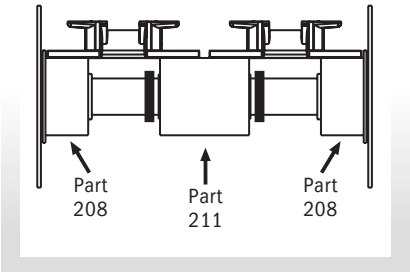

Material:
Rullino: *Polyethylene (PE)*

207 *Flange*

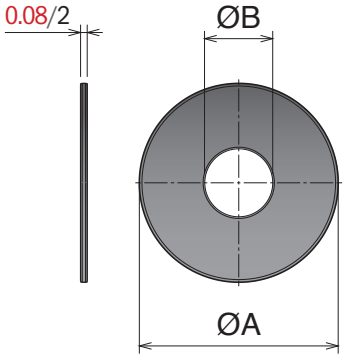

Part	Article-Nr.	ØA	ØB
207	20712	1.97/50	5/8
207	20714	1.97/50	3/4
207	20701	2.36/60	5/8
207	20703	2.36/60	3/4
207	20704	2.75/70	5/8
207	20706	2.75/70	3/4
207	20707	3.15/80	5/8
207	20709	3.15/80	3/4

233 *Guide Flange*

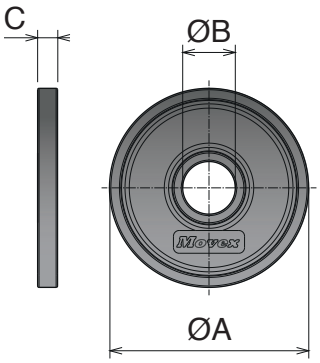

Part	Article-Nr.	ØA	ØB	C
233	23303	1.00/25,5	3/4	0.28/7,25
233	23304	2.36/60	3/4	0.28/7,25
233	23305	2.75/70	5/8	0.27/7
233	23307	2.75/70	3/4	0.27/7
233	23302	3.54/90	3/4	0.19/5

213 *Snap-on sliding shoe*

Part	Article-Nr.	for HUB
213	21303	3/4

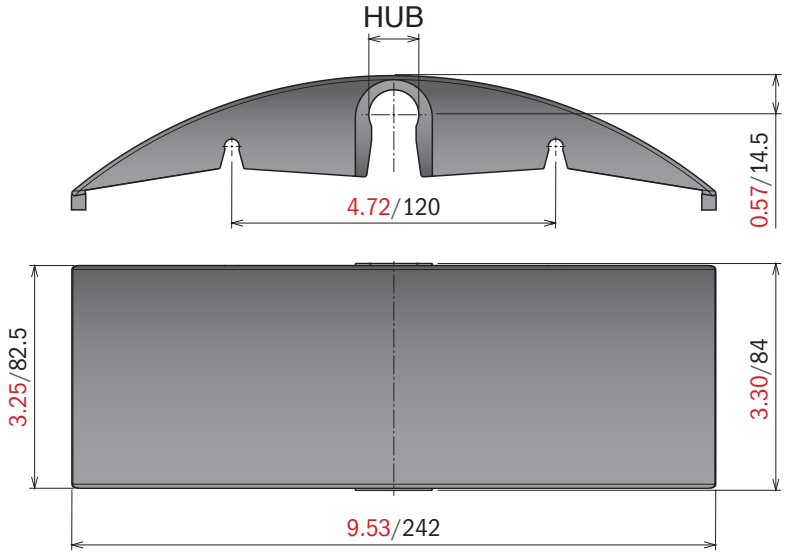

Material:
Clamps: Polyamide
Screws and nuts: Stainless steel

221

Split collar with keyway

Max recommended tightening torque: 0,3 N mt

Part	Article-Nr.	A in-mm	B in-mm	C in-mm	ØD	X
221	22101Y	¼/6,85	1.14/29,1	0.55/14	1	1.81/46
221	22102Y	¼/6,85	1.40/35,5	0.62/16	1 ¼	2.04/52
221	22104Y	⅜/10,025	1.7/43,2	0.70/18	1 ½	2.51/64

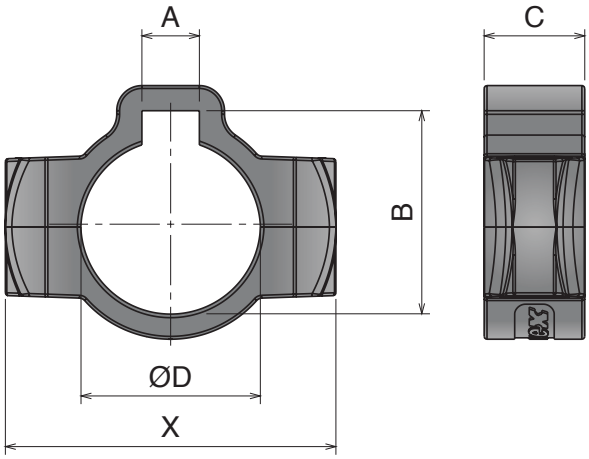

215

Split collar

Max recommended tightening torque: 0,3 N mt

Part	Article-Nr.	ØA in-mm	ØB	C in-mm	X in-mm
215	21501Y	0.79/20	½	0.47/12	1.24/31,5
215	21503Y	1.02/26	¼	0.55/14	1.65/42
215	21505Y	1.22/32	1	0.55/14	1.81/46
215	21506Y	1.46/38	1 ¼	0.62/16	2.00/51
215	21508Y	1.85/48	1 ½	0.70/18	2.51/64

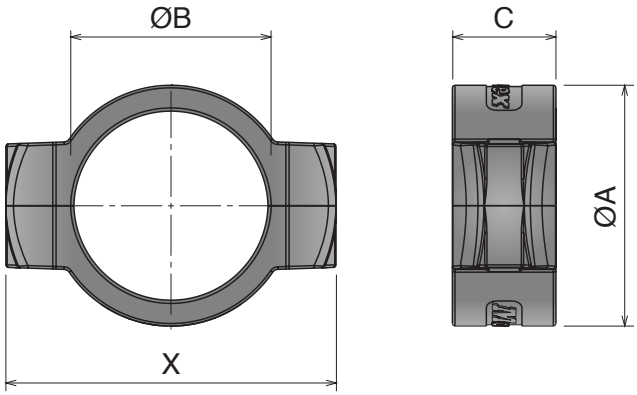

Material:
Polyamide (PA)

230 Spacer for round profile

Part	Article-Nr.
230	23001

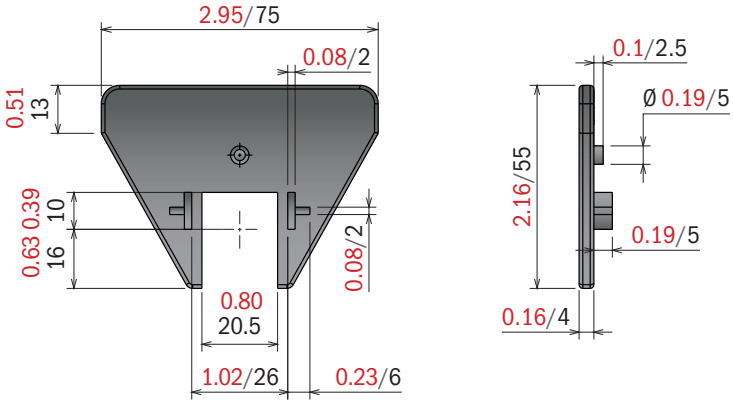

231 Striker

Part	Article-Nr.	W in-mm
231	23101	3.30/84
231	23102	3.46/88
231	23103	4.25/108
231	23104	4.57/116

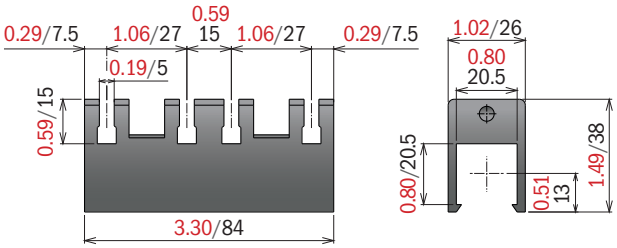

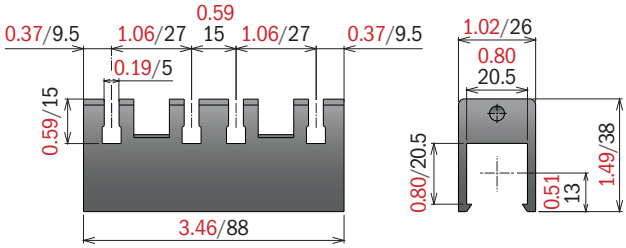

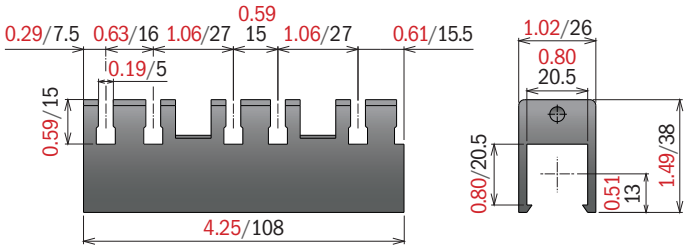

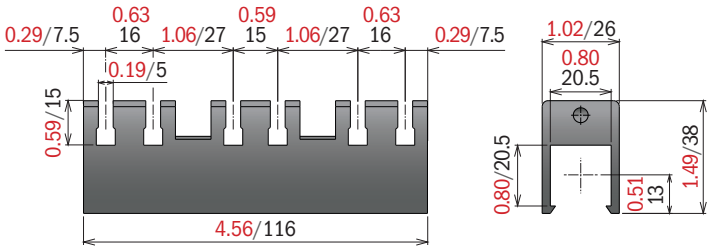

259

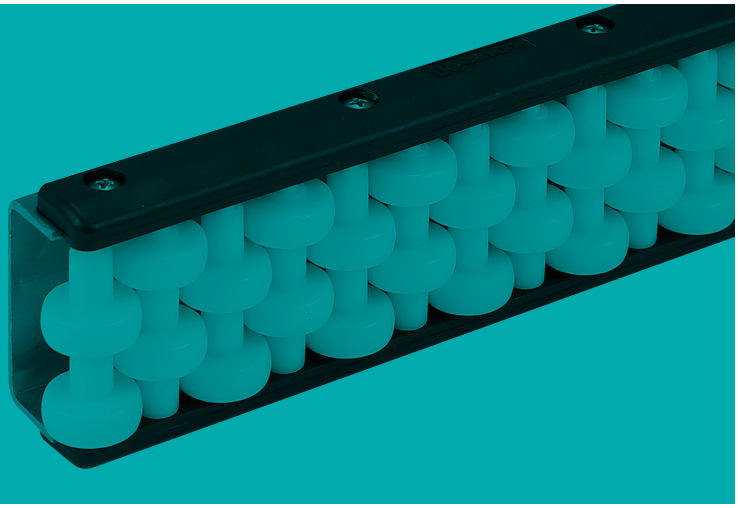

Conveyor components

301 Pag 261

302 Pag 261

305 Pag 262

306 Pag 262

307 Pag 263

308 Pag 263

309 Pag 264

310 Pag 264

311 Pag 265

312 Pag 265

398 Pag 266

398 Pag 266

313 Pag 267

314 Pag 267

314 Pag 267

315 Pag 268

316 Pag 268

317 Pag 269

317 Pag 269

318 Pag 269

319 Pag 270

320 Pag 270

321 Pag 271

322 Pag 271

323 Pag 271

324 Pag 272

325 Pag 272

326 Pag 272

327 Pag 272

328 Pag 273

329 Pag 273

330 Pag 273

390 Pag 273

392 Pag 274

393 Pag 274

336 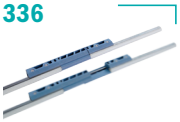 Pag 274

394 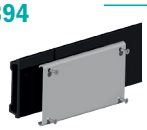 Pag 275

341 Pag 275

331 Pag 276

345 Pag 276

337 Pag 277

338 Pag 277

339 Pag 277

349 Pag 278

350 Pag 278

351 Pag 278

352 Pag 278

347 Pag 279

movexii.com

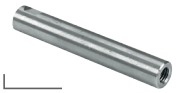

348 Pag 279

346 Pag 280

356 Pag 280

357 Pag 280

335 Pag 281

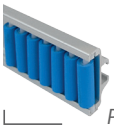

358 Pag 282

364 Pag 282

359 Pag 283

365 Pag 283

360 Pag 284

366 Pag 284

361 Pag 285

367 Pag 285

366 Pag 286

367 Pag 286

364 Pag 287

365 Pag 287

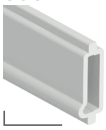

395 Pag 288

362 Pag 288

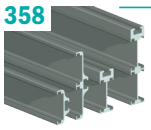

358 Pag 288

333 Pag 288

353 Pag 289

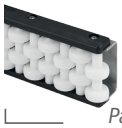

354 Pag 289

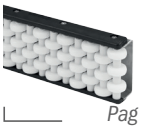

355 Pag 289

363 Pag 290

396 Pag 291

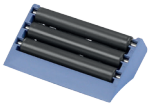

368 Pag 292

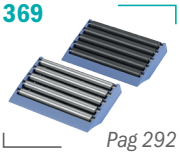

369 Pag 292

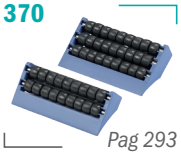

370 Pag 293

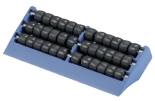

371 Pag 293

199 Pag 294

372 Pag 295

373 Pag 295

383 Pag 296

384 Pag 296

385 Pag 297

386 Pag 297

397 Pag 297

374 Pag 298

375 Pag 298

378 Pag 299

379 Pag 300

380 Pag 300

381 Pag 301

382 Pag 301

376 Pag 302

376 Pag302

376 Pag 302

391 Pag 303

387 Pag 304

388 Pag 304

Movex®

Material:
Support: PA
Knob: PA+nickel plated brass
Eyebolt: Stainless steel

301

Side bracket -small-

Part	Article-Nr.	ØA in-mm	B in-mm
301	30101	½/12	0.35/9
301	30102	⅝/16	0.35/9
301	30103	½/12	0.41/10,5
301	30104	⅝/16	0.41/10,5

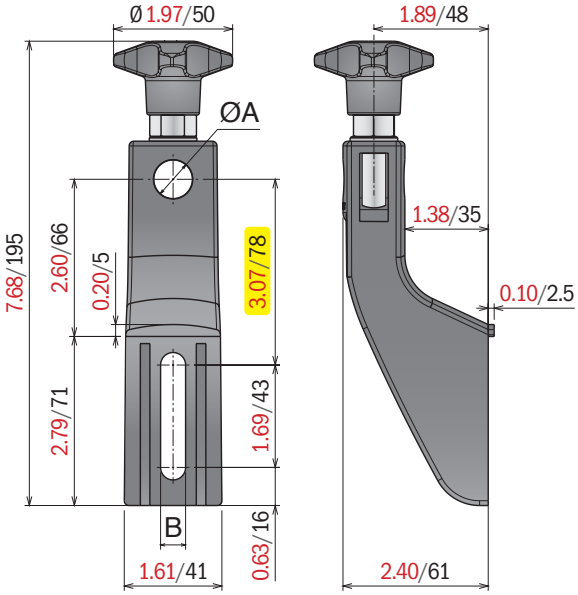

302

Side bracket -small- high knob

Part	Article-Nr.	ØA in-mm	B in-mm
302	30201	½/12	0.35/9
302	30202	⅝/16	0.35/9
302	30203	½/12	0.41/10,5
302	30204	⅝/16	0.41/10,5

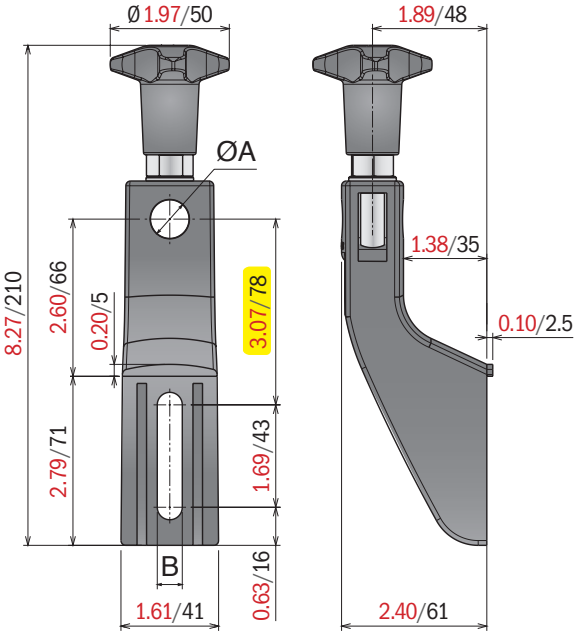

Material:
Support: PA
Knob: PA+nickel plated brass
Eyebolt: Stainless steel

305 *Side bracket -medium-*

Part	Article-Nr.	ØA in-mm	B in-mm
305	30501	½/12	0.35/9
305	30502	⅝/16	0.35/9
305	30503	½/12	0.41/10,5
305	30504	⅝/16	0.41/10,5

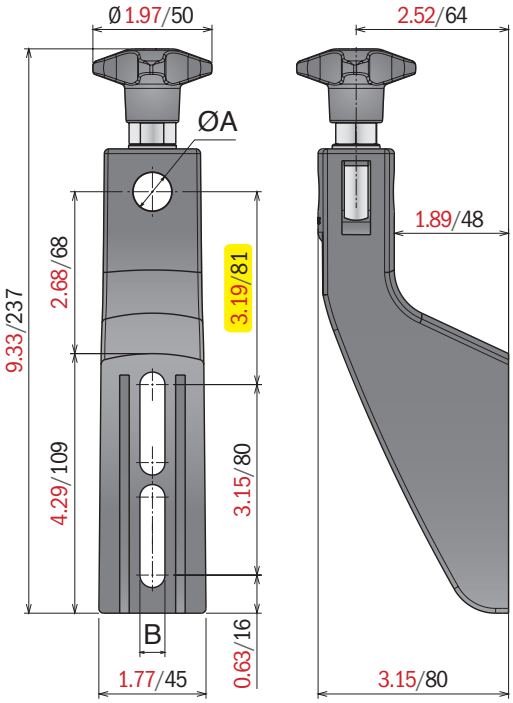

306 *Side bracket -medium- high knob*

Part	Article-Nr.	ØA in-mm	B in-mm
306	30601	½/12	0.35/9
306	30602	⅝/16	0.35/9
306	30603	½/12	0.41/10,5
306	30604	⅝/16	0.41/10,5

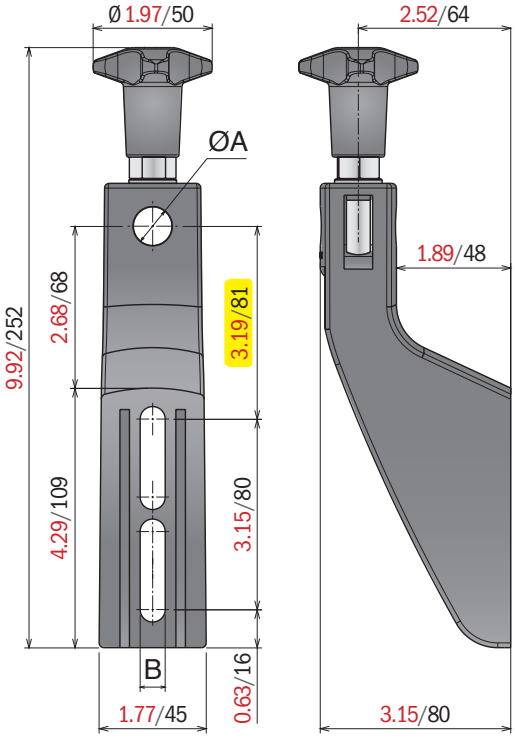

Material:
Support: PA / Knob: PA+nickel plated brass
Eyebolt: Stainless steel / Heads: PA or stainless steel
Screw, washers and nut: Stainless steel

307

Side bracket -medium- adjustable

Part	Article-Nr.	ØA in-mm	B in-mm
307	30701	½/12	0.35/9
307	30705	0.55/14	0.35/9
307	30702	⅝/16	0.35/9
307	30703	½/12	0.41/10,5
307	30706	0.55/14	0.41/10,5
307	30704	⅝/16	0.41/10,5
307	30709	bracket	0.35/9
307	30710	bracket	0.41/10,5

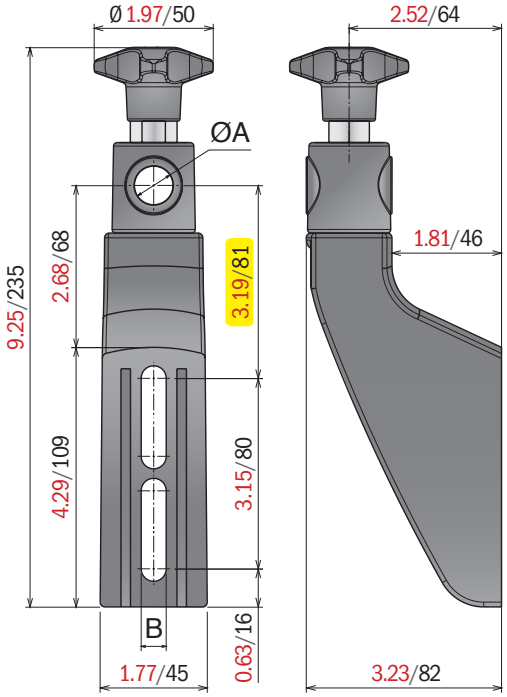

308

Side bracket -medium- adjustable SS

Part	Article-Nr.	ØA in-mm	B in-mm
308	30801	½/12	0.35/9
308	30802	⅝/16	0.35/9
308	30803	½/12	0.41/10,5
308	30804	⅝/16	0.41/10,5

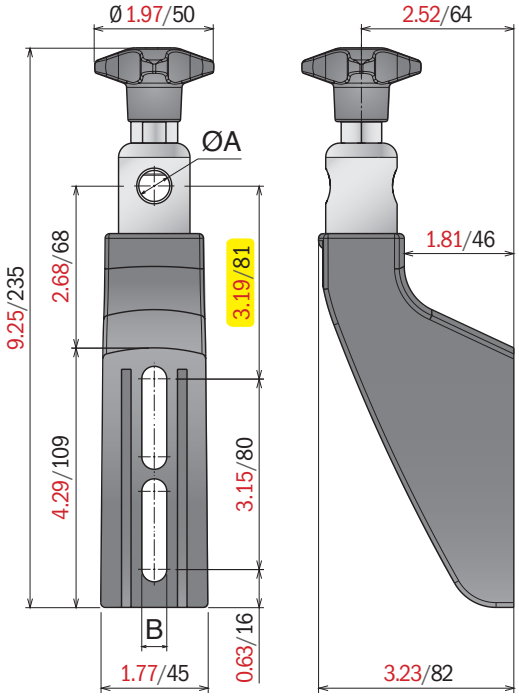

Material:
Support: PA
Knob: PA+nickel plated brass
Eyebolt: Stainless steel

309 *Side bracket -large-*

Part	Article-Nr.	ØA in-mm	B in-mm
309	30901	½/12	0.35/9
309	30902	⅝/16	0.35/9
309	30903	½/12	0.41/10,5
309	30904	⅝/16	0.41/10,5

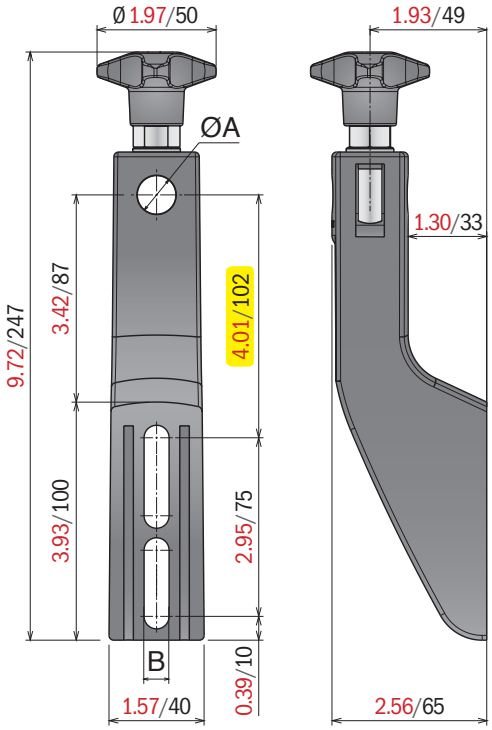

310 *Side bracket -large- high knob*

Part	Article-Nr.	ØA in-mm	B in-mm
310	31001	½/12	0.35/9
310	31002	⅝/16	0.35/9
310	31003	½/12	0.41/10,5
310	31004	⅝/16	0.41/10,5

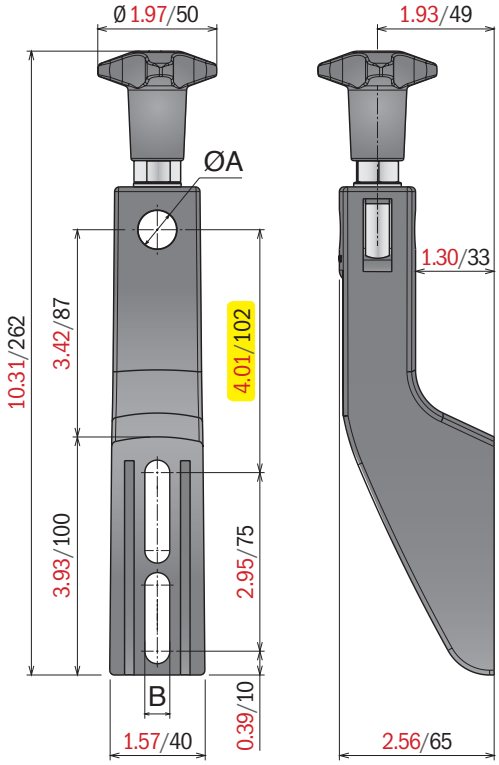

Material:
Support: PA / Knob: PA+nickel plated brass
Eyebolt: Stainless steel / Heads: PA or stainless steel
Screw, washers and nut: Stainless steel

311

Side bracket -large- adjustable

Part	Article-Nr.	ØA in-mm	B in-mm
311	31101	½/12	0.35/9
311	31102	⅝/16	0.35/9
311	31103	½/12	0.41/10,5
311	31104	⅝/16	0.41/10,5
311	31109	bracket	0.35/9
311	31110	bracket	0.41/10,5

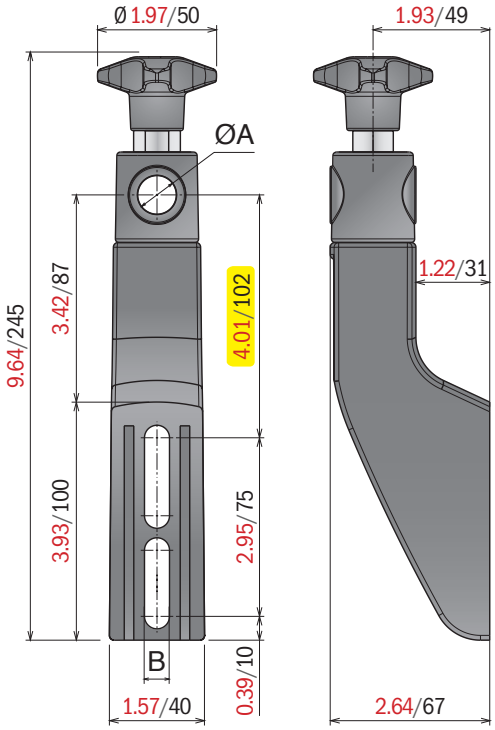

312

Side bracket -large-, adjustable SS

Part	Article-Nr.	ØA in-mm	B in-mm
312	31201	½/12	0.35/9
312	31202	⅝/16	0.35/9
312	31203	½/12	0.41/10,5
312	31204	⅝/16	0.41/10,5

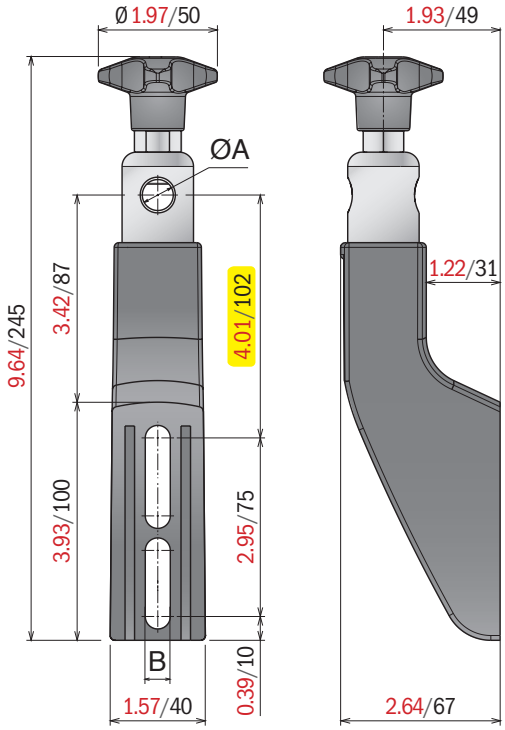

Material:
Support: Stainless steel
Knob: PA+nickel plated brass

398 *SS bracket -medium- adjustable*

Part	Article-Nr.	ØA in-mm
398	39860	½/12
398	39861	⅝/16

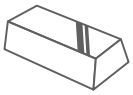

Stainless steel AISI 304

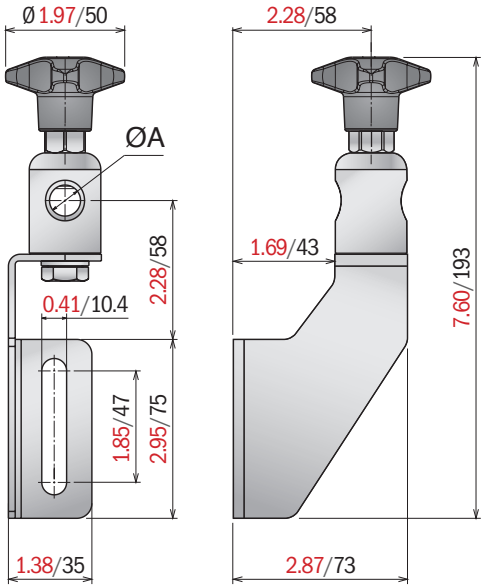

SS bracket -large- adjustable

Part	Article-Nr.	ØA in-mm
398	39870	½/12
398	39871	⅝/16

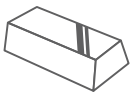

Stainless steel AISI 304

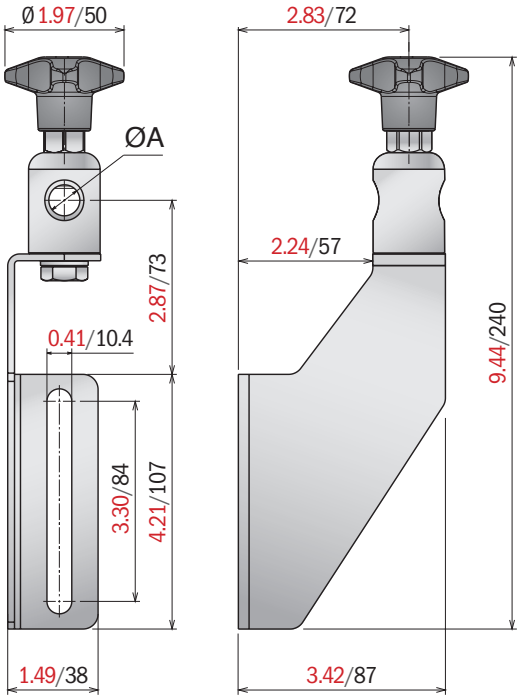

Material:
Knob: PA+nickel plated brass
Eyebolt: Stainless steel / Heads: PA or stainless steel
Screw, washers and nut: Stainless steel

313 *Adjustable head*

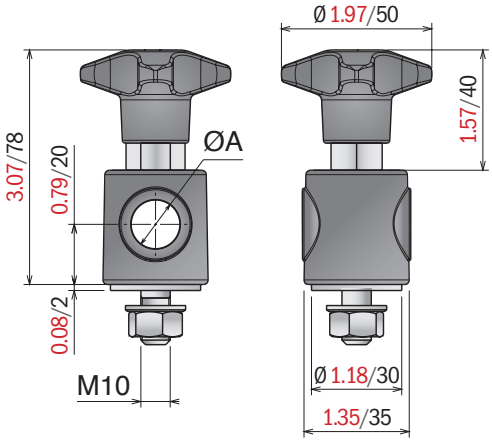

Part	Article-Nr.	ØA in-mm
313	31301	½/12
313	31302	⅝/16
313	31311	½/12-without knob
313	31312	⅝/16-without knob

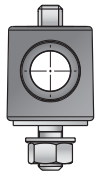

Without knob

Spacer 31330

314 *Adjustable head - SS-*

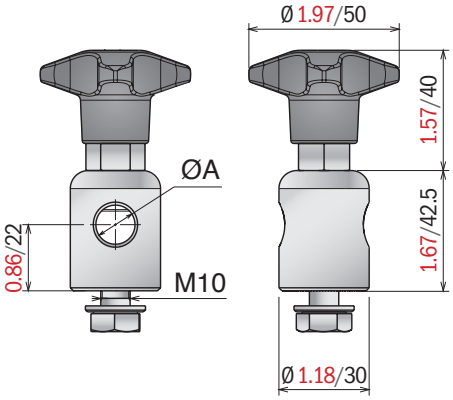

Part	Article-Nr.	ØA in-mm
314	31401	½/12
314	31402	⅝/16
314	31411	½/12-without knob
314	31412	⅝/16-without knob

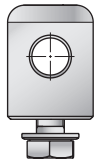

Without knob

Adjustable head - SS-

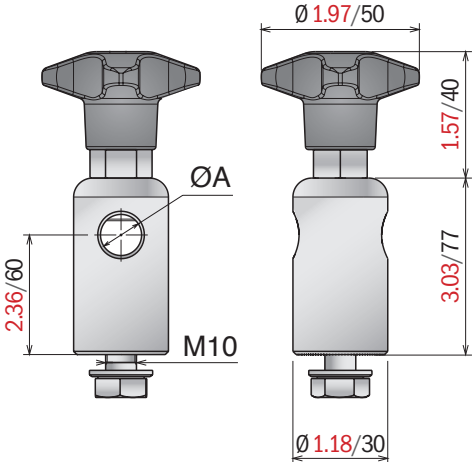

Part	Article-Nr.	ØA in-mm
314	31409	½/12
314	31410	⅝/16
314	31419	½/12-without knob
314	31420	⅝/16-without knob

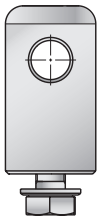

Without knob

Material:
Stainless steel

315 *L-bracket*

Part	Article-Nr.	Type
315	31501	A
315	31502	B

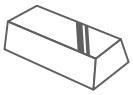

Stainless steel AISI 304

Type A - without nose

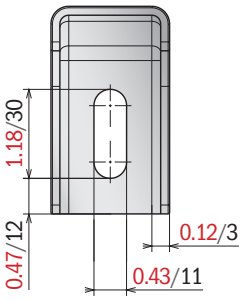

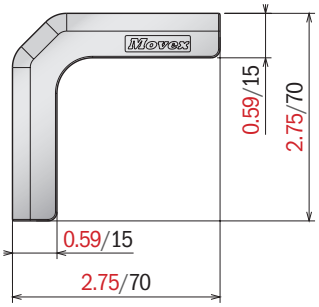

Type B - with nose

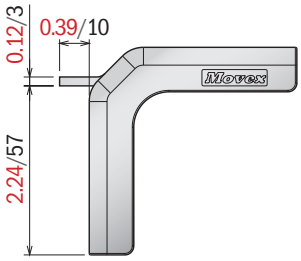

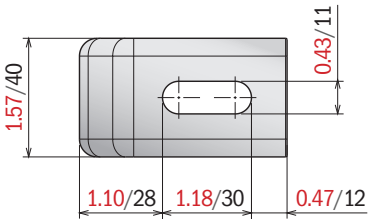

316 *L-bracket*

Part	Article-Nr.	Type
316	31601	A
316	31602	B

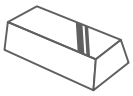

Stainless steel AISI 304

Type A - without nose

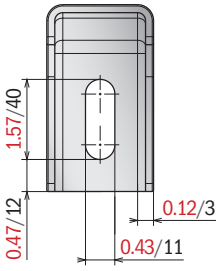

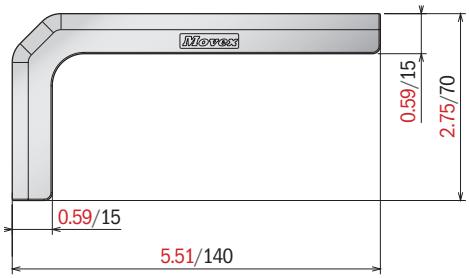

Type A - with nose

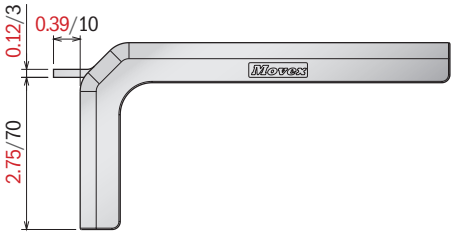

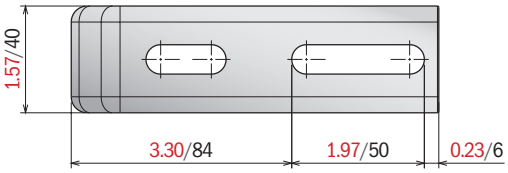

317 *Star knob*

Part	Article-Nr.	Ø in-mm
317	31701	1.97/50
317	31702	1.57/40

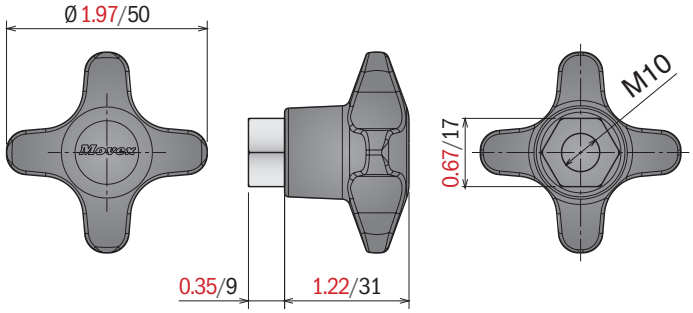

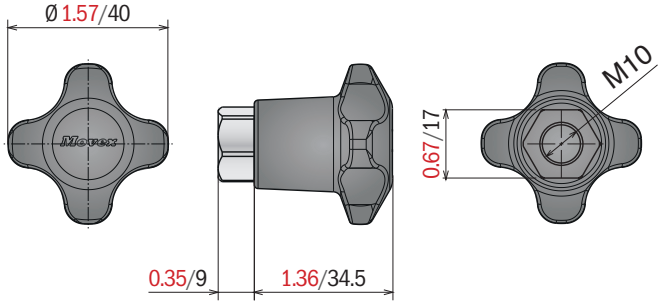

Star knob with eye-bolt

Part	Article-Nr.	ØA in-mm
317	31799	½/12
317	31798	⅝/16

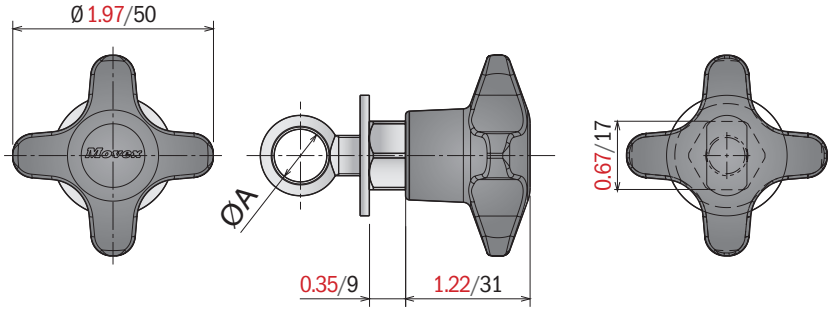

318 *Star knob*

Part	Article-Nr.	
318	31801	

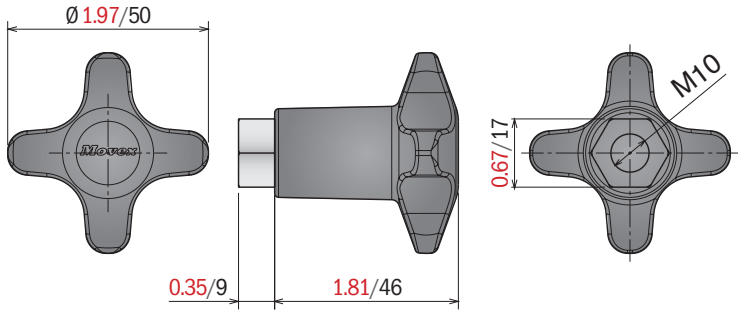

Material:
Polyamide + nickel plated brass

319 *Star knob*

Part	Article-Nr.	Ø in-mm
319	31901	1.97/50

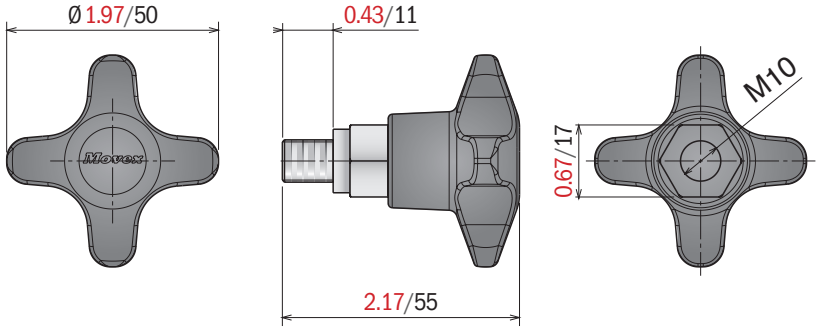

320 *Star knob Ø3.15*

Part	Article-Nr.	A
320	32001	M12
320	32002	M16

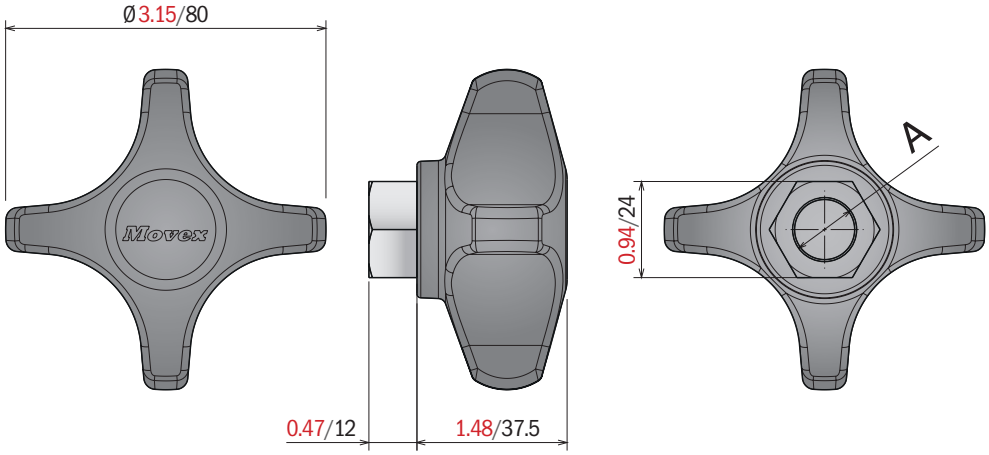

321 *Spacer for bracket -small-*

Part	Article-Nr.
321	32101

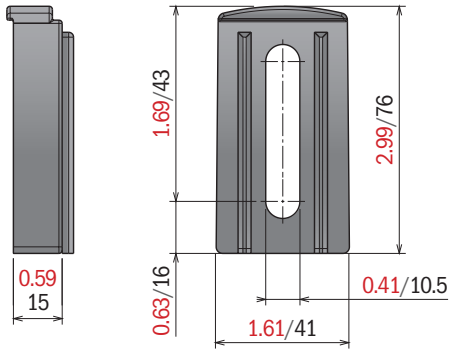

Use with bracket
part. 301-302
page 261

322 *Spacer for bracket -medium-*

Part	Article-Nr.
322	32201

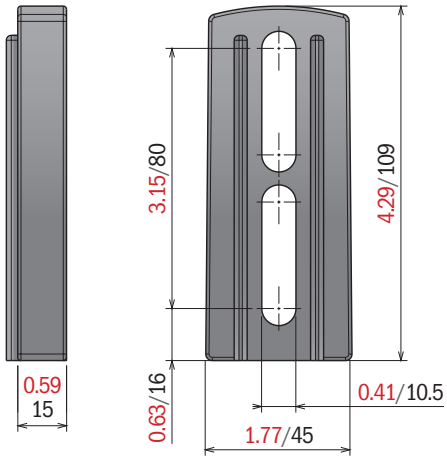

Use with bracket
part. 305-306-307-308
pages 262-263

323 *Spacer for bracket -large-*

Part	Article-Nr.
323	32301

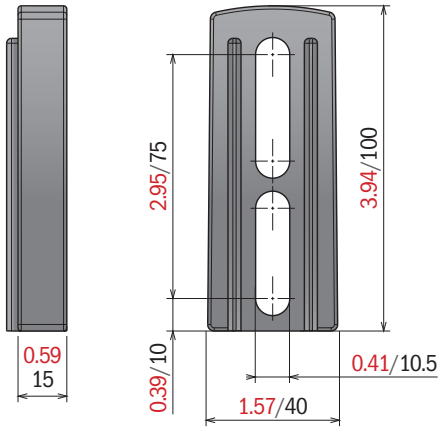

Use with bracket
part. 309-310-311-312
pages 264-265

Material:
Clamp: PA
Screw, pin and washer: Stainless steel
Nut: nickel plated brass

324 *Single clamp for guide rail*

Part	Article-Nr.
324	32401

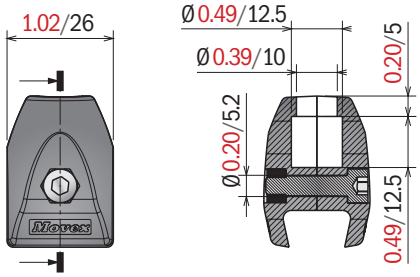

Consult pag 278 for pin design

325 *Single clamp for guide rail*

Part	Article-Nr.
325	32501Y

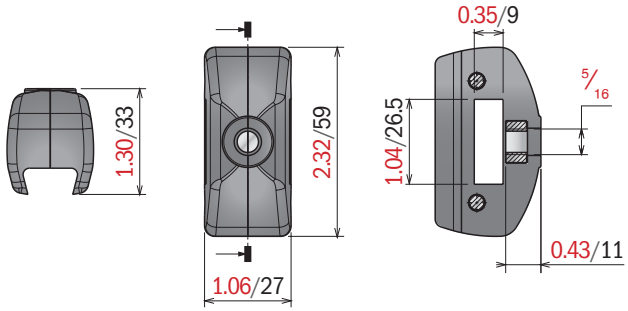

326 *Single clamp for guide rail*

Part	Article-Nr.
326	32601

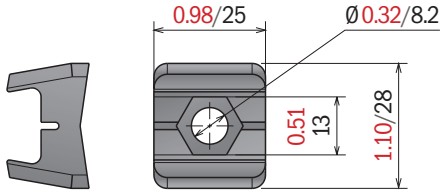

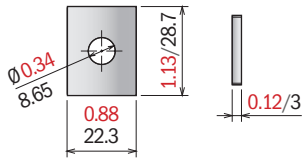

Reinforcement plate Art-Nr. 33201

327 *Single clamp for guide rail*

Part	Article-Nr.	ØA
327	32701Y	without pin
327	32702Y	12
327	32703Y	16

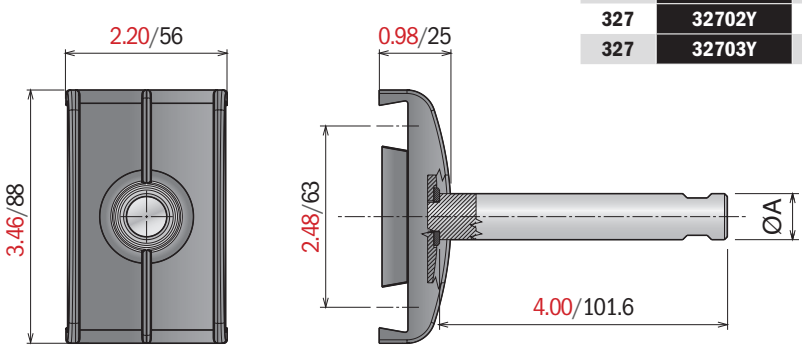

328

Single clamp for conical side guide

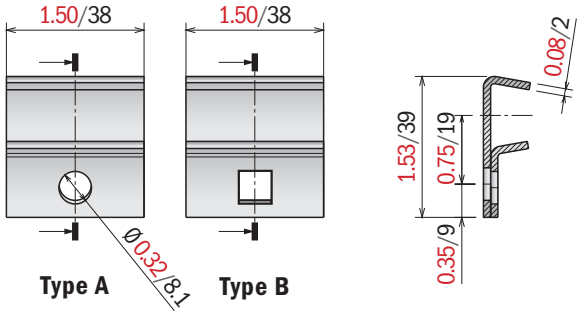

Part	Article-Nr.	Material	Type
328	32801	AISI 304	A
328	32802	AISI 304	B
328	32811	AISI 316	A

329

Double clamp for conical side guide

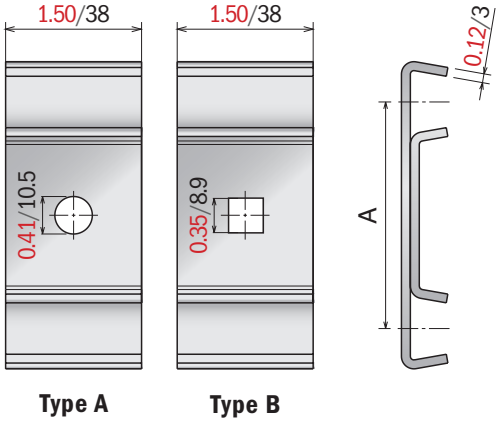

Part	Article-Nr.	A in-mm	Type
329	32904	2/50,8	A
329	32901	2.5/63,5	A
329	32902	3.25/82,55	A
329	32903	3.75/95,25	A
329	32911	2.5/63,5	B
329	32912	3.25/82,55	B
329	32913	3.75/95,25	B

Type A used with 3/8 or M10 fastener
Type B used with 5/16 or M8 fastener

330

Single clamp for conical side guide

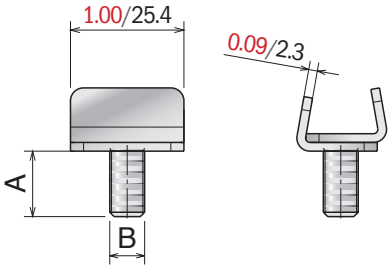

Part	Article-Nr.	A in-mm	B in-mm
330	33011	0.59/15	M8
330	33013	0.78/20	M8
330	33012	0.98/25	M8
330	33014	1.18/30	M8
330	33021	0.675	5/16-18
330	33022	0.75	5/16-18
330	33023	1	5/16-18
330	33024	1.25	5/16-18

390

Connecting element

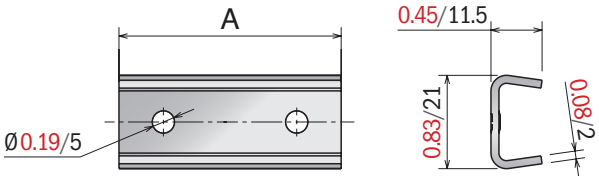

Part	Article-Nr.	ØA in-mm
390	39011	2/50,8
390	33012	3/76,2
390	33013	4/101,6

Material: Stainless steel
Clamp: Acetal resin
Screw, pin and washer: Stainless steel

392 *Connecting clamp*

Part	Article-Nr.	A in-mm
392	39201Y	3/76.2
392	39202Y	4/102.6
392	39203Y	6/152.4

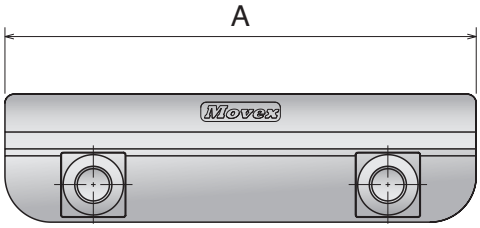

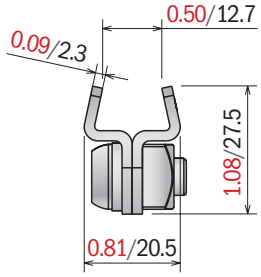

393 *Connecting clamp*

Part	Article-Nr.	A in-mm
393	39302	4/101,6

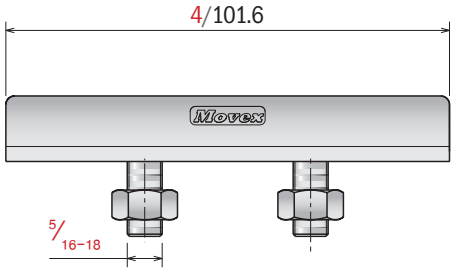

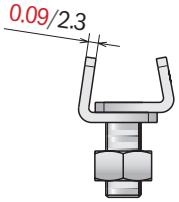

336 *Adjustable clamp for conical guide*

Part	Article-Nr.
336	33601

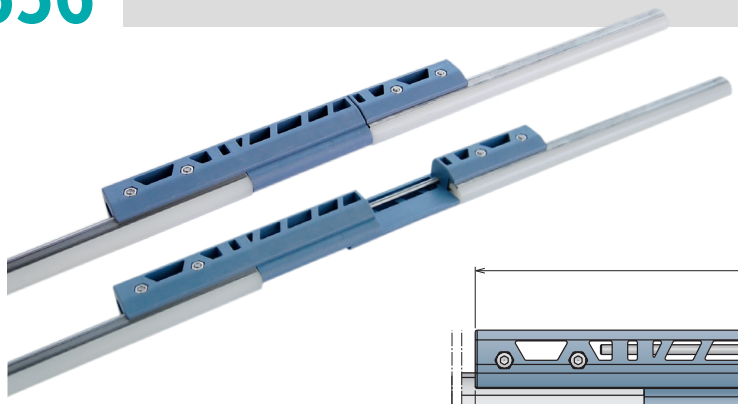

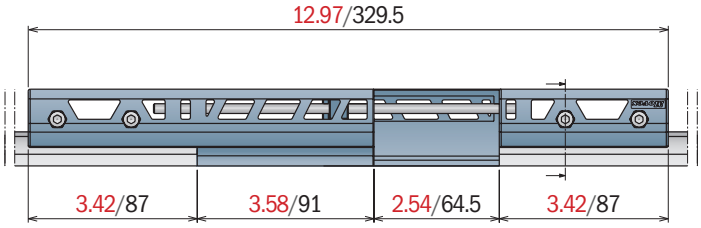

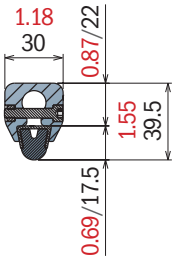

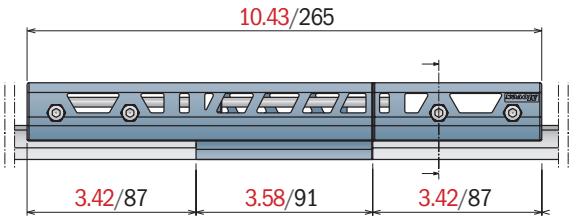

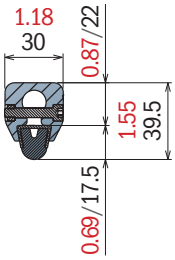

394 *Joint clamp*

Part	Article-Nr.	A in-mm	B in-mm	C in-mm	Specific
394	39401	3.2/81,5	0.35/9	0.70/18	used with part 135
394	39402	3.54/90	0.31/8	0.67/17	used with part 136

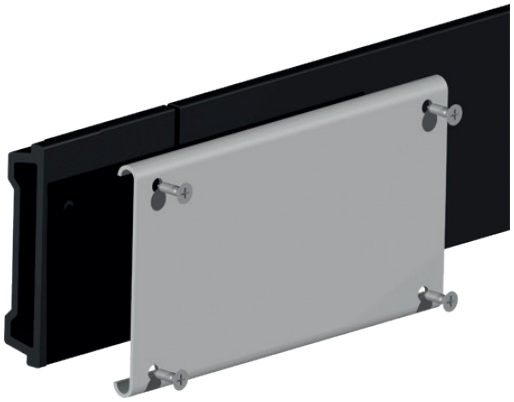

Used with Part 135 page 234

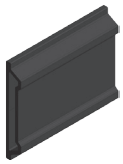

Used with Part 136 page 234

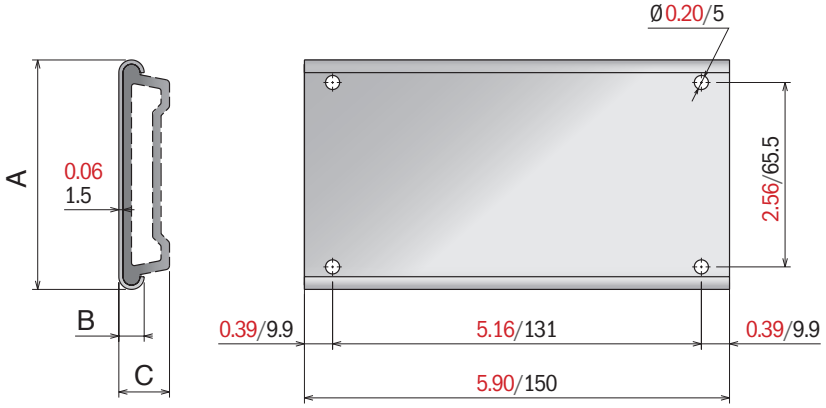

341 *Clamp*

Part	Article-Nr.	ØA	Type
341	34101	without pin	A
341	34102	0.47/12	A
341	34103	0.63/16	A

Type A

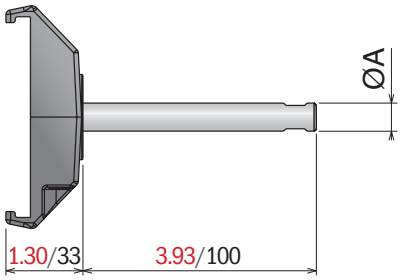

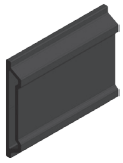

Used with Part 136 page 234

Part	Article-Nr.	ØA	Type
341	34151	without pin	B
341	34152	0.47/12	B
341	34153	0.63/16	B

Type B

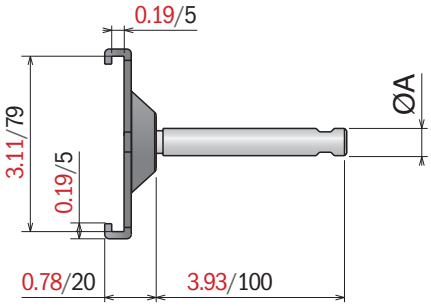

Used with Part 135 page 234

Material:
Clamp: *Stainless steel*
Screw, pin and washer: Stainless steel
Nuts: Nickel plated brass

331

Clamp, stainless steel

Part	Article-Nr.	ØA in-mm	B in-mm	C in-mm
331	33101	without pin	3.11/79	0.24/6
331	33102	0.47/12	3.11/79	0.24/6
331	33103	0.63/16	3.11/79	0.24/6

Used with
Part 135
page 234

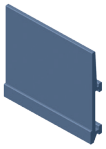

Used with
Part 189 page 240
Part 187 page 241
Part 1056 page 242
Part 1057 page 242

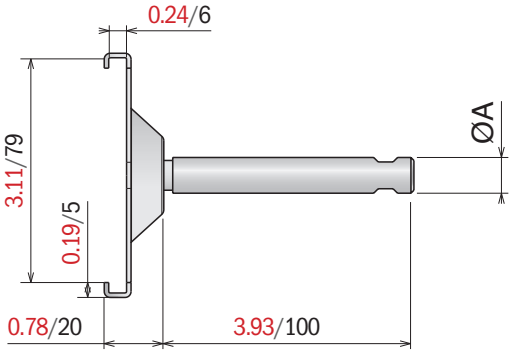

345

Clamp, stainless steel

Part	Article-Nr.	ØA in-mm	B in-mm	C in-mm
345	34501	without pin	3.47/88	0.19/5
345	34502	0.47/12	3.47/88	0.19/5
345	34503	0.63/16	3.47/88	0.19/5

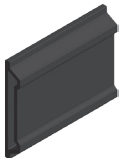

Used with
Part 136
page 234

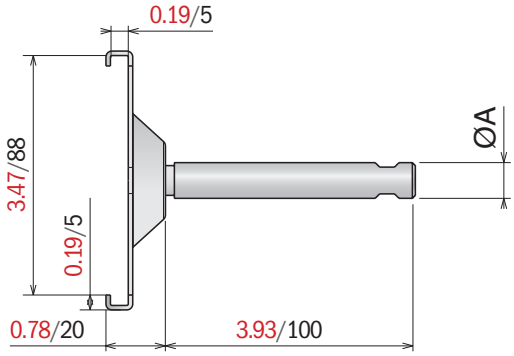

337 Single clamp for round bar

Part	Article-Nr.	ØA
337	33702Y	½/12.7

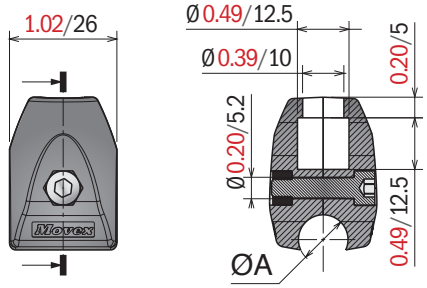

Consult pag 278 for pin design

338 Single clamp for round bar

Part	Article-Nr.	ØA
338	33802Y	½/12.7

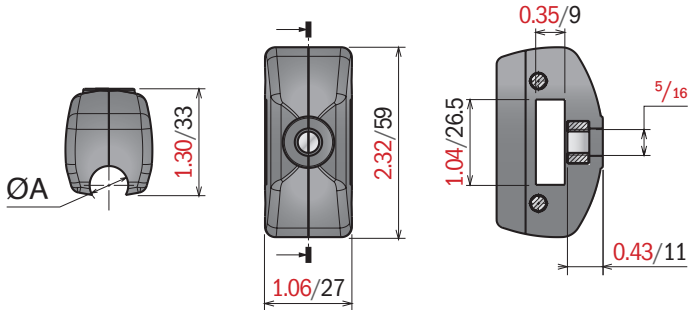

339 Double clamp for round bar

Part	Article-Nr.	ØA
339	33901Y	without pin
339	33902Y	½/12.7
339	33903Y	⅝/15.875

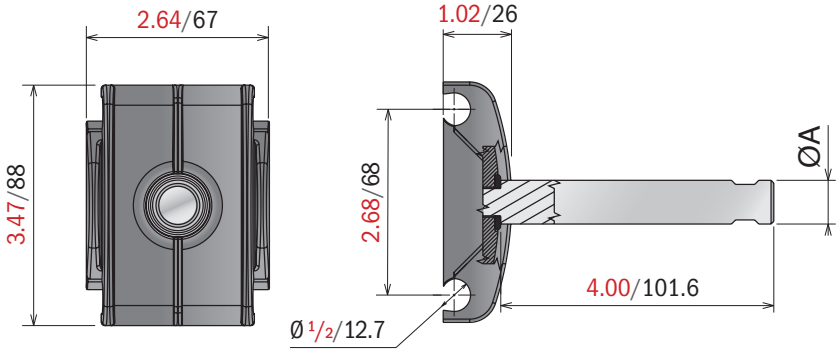

Material: Stainless steel

349 *Rod*

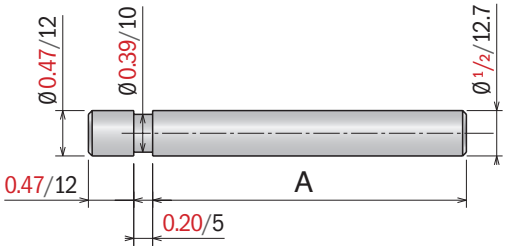

Part	Article-Nr.	A in-mm
349	34911	3/76.2
349	34912	5/12.7
349	34913	7/177.8
349	34914	9/228.6

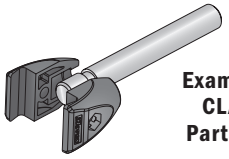

Example: CLAMP Part 268

350 *Rod*

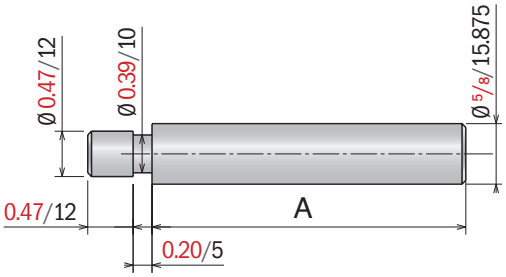

Part	Article-Nr.	A in-mm
350	35011	3/76.2
350	35012	5/12.7
350	35013	7/177.8
350	35014	9/228.6

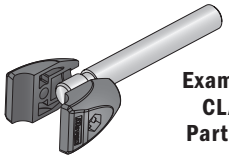

Example: CLAMP Part 268

351 *Rod*

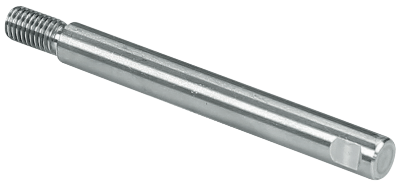

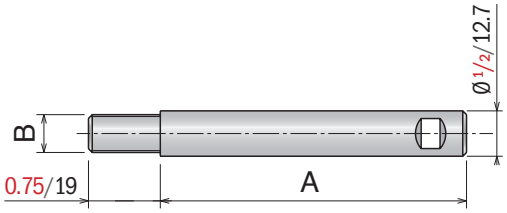

Part	Article-Nr.	A in-mm	B in-mm
351	35111	3/76.2	3/8-16
351	35112	5/12.7	3/8-16
351	35113	7/177.8	3/8-16
351	35114	9/228.6	3/8-16
351	35161	3/76.2	5/16-18
351	35162	5/12.7	5/16-18
351	35163	7/177.8	5/16-18
351	35164	9/228.6	5/16-18

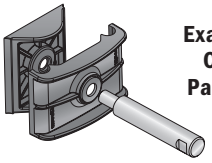

Example: CLAMP Part 268

352 *Rod*

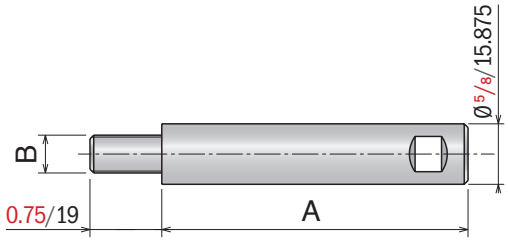

Part	Article-Nr.	A in-mm	B in-mm
352	35211	3/76.2	3/8-16
352	35212	5/12.7	3/8-16
352	35213	7/177.8	3/8-16
352	35214	9/228.6	3/8-16
352	35261	3/76.2	5/16-18
352	35262	5/12.7	5/16-18
352	35263	7/177.8	5/16-18
352	35264	9/228.6	5/16-18

347 Rod

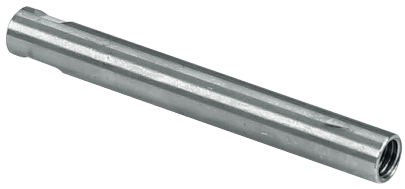

Part	Article-Nr.	A in-mm	B in-mm
347	34711	3/76.2	3/8-16
347	34712	5/12.7	3/8-16
347	34713	7/177.8	3/8-16
347	34714	9/228.6	3/8-16
347	34761	3/76.2	5/16-18
347	34762	5/12.7	5/16-18
347	34763	7/177.8	5/16-18
347	34764	9/228.6	5/16-18

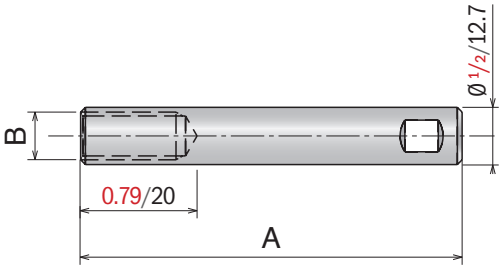

348 Rod

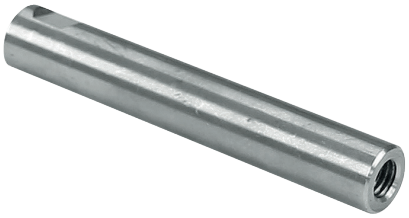

Part	Article-Nr.	A in-mm	B in-mm
348	34811	3/76.2	3/8-16
348	34812	5/12.7	3/8-16
348	34813	7/177.8	3/8-16
348	34814	9/228.6	3/8-16
348	34861	3/76.2	5/16-18
348	34862	5/12.7	5/16-18
348	34863	7/177.8	5/16-18
348	34864	9/228.6	5/16-18

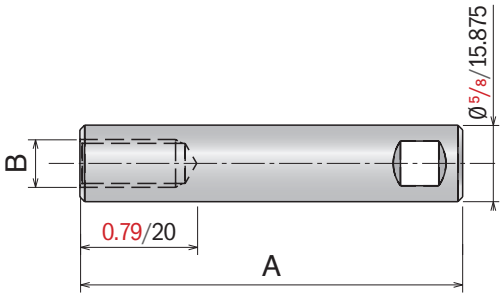

Material: Stainless steel

346 *Joint rod adapter*

Part	Article-Nr.	A and B
346	34611	5/16-18
346	34612	3/8-16

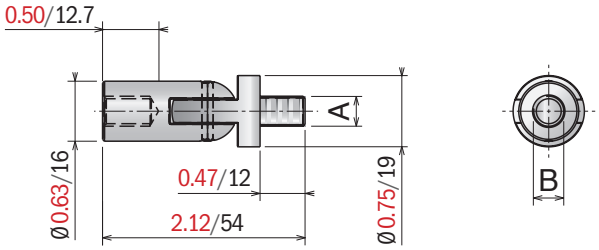

356 *Jointed rods*

Part	Article-Nr.	A in-mm
356	35611	3/76.2
356	35612	5/12.7
356	35613	7/177.8
356	35614	9/228.6

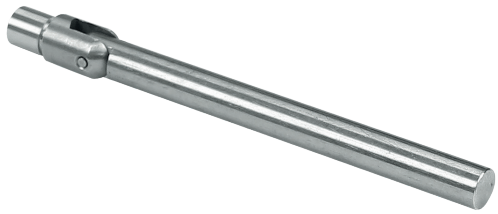

Use with bracket
Part 324-337

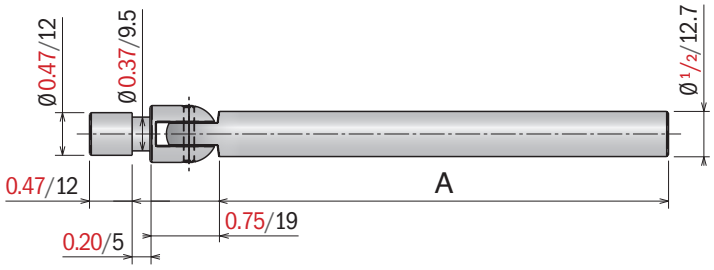

357 *Jointed rods*

Part	Article-Nr.	A in-mm	B in-mm
357	35711	3/76.2	5/16-18
357	35712	5/12.7	5/16-18
357	35713	7/177.8	5/16-18
357	35714	9/228.6	5/16-18
357	35721	3/76.2	3/8-16
357	35722	5/12.7	3/8-16
357	35723	7/177.8	3/8-16
357	35724	9/228.6	3/8-16

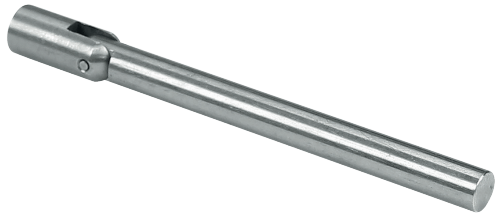

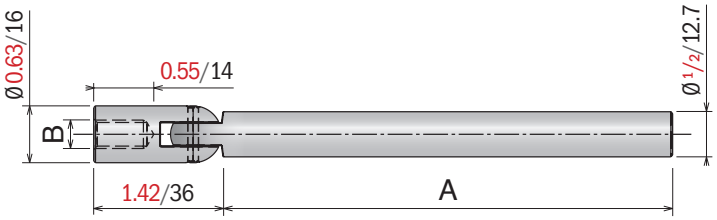

Material:
Polyethylene HMW-PE
Rollers: Acetal Resin or SEB

335 *Roller guides*

Max fixing load M8 screw: 15 N/m

New Patented

Type A

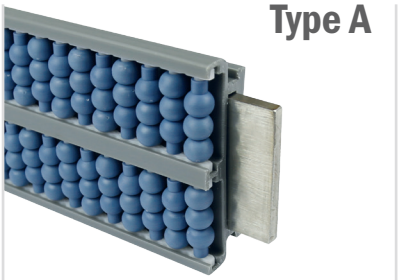

Part	Article-Nr.	Type
335	33502	A

Type B

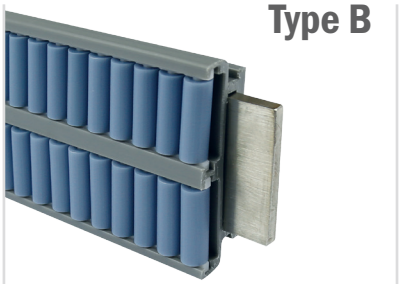

Part	Article-Nr.	Type
335	33504	B

Type B1

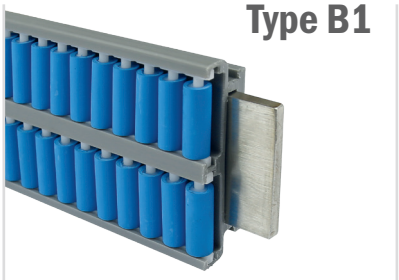

Part	Article-Nr.	Type
335	33506	B1

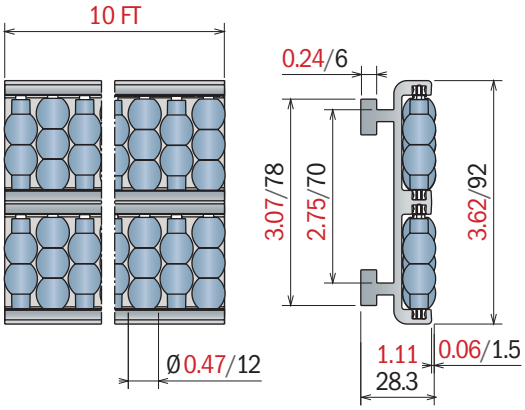

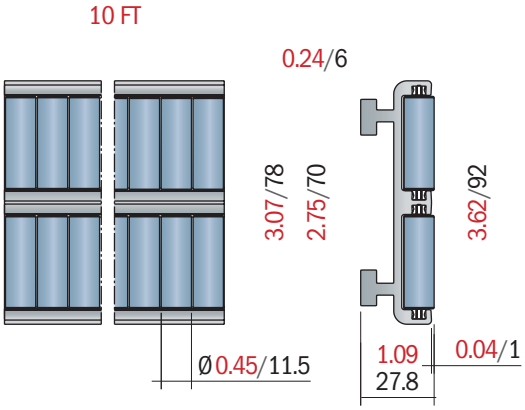

Soft roller SEBS rubber

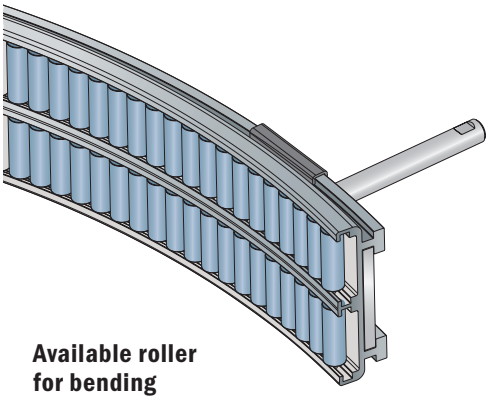

Available roller for bending machine

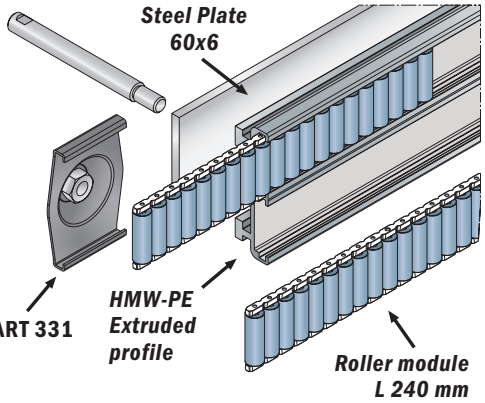

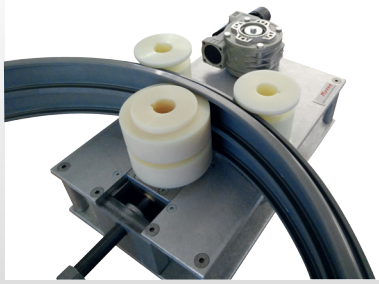

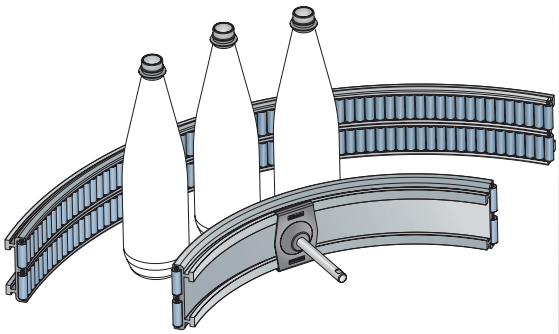

Material:
Guide: Anodized aluminum
Rollers: Acetal Resin or SEBS rubber
Screw: Stainless steel

358 *Roller guides*

Max fixing load M8 screw: 15 N/m

Type A

Part	Article-Nr.	Type
358	35802Y	A

Type B

Part	Article-Nr.	Type
358	35804Y	B

Type B1

Part	Article-Nr.	Type
358	35806Y	B1

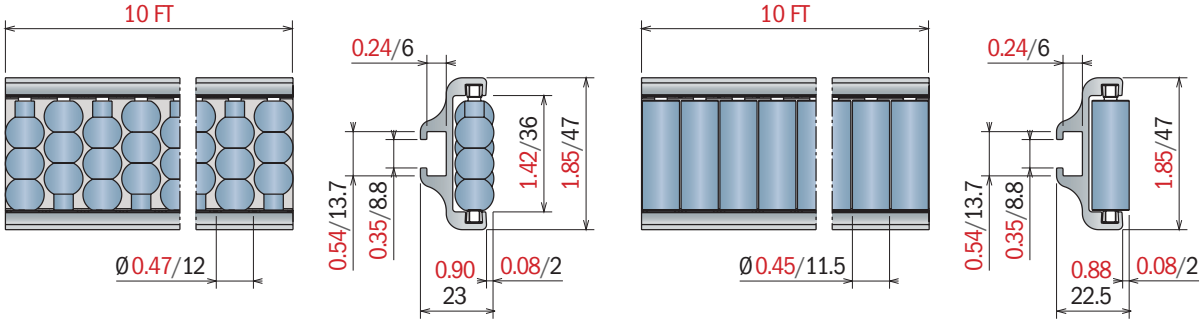

Soft roller SEBS rubber

Fixing screw: M8 hex.head or **PART 362**

Puntale / *Shoe / Einlaufschuh*

Part	Article-Nr.	Type
364	36401	machined

Material:
Guide: Anodized aluminum
Rollers: Acetal Resin or SEBS rubber
Screw: Stainless steel

359 *Roller guides*

Max fixing load M8 screw: 15 N/m

Type A

Part	Article-Nr.	Type
359	35902Y	A

Type B

Part	Article-Nr.	Type
359	35904Y	B

Type B1

Part	Article-Nr.	Type
359	35906Y	B1

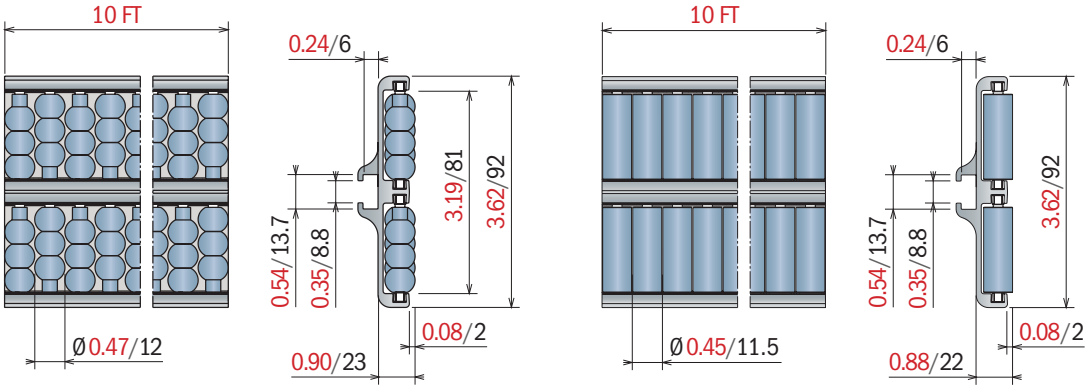

Soft roller SEBS rubber

Fixing screw: M8 hex.head or **PART 362**

Puntale / *Shoe / Einlaufschuh*

Part	Article-Nr.	Type
365	36501	machinedz

Material:
Guide: Anodized aluminum
Rollers: Acetal Resin or SEBS rubber

360 *Roller guides*

Max fixing load M8 screw: 15 N/m

Type A

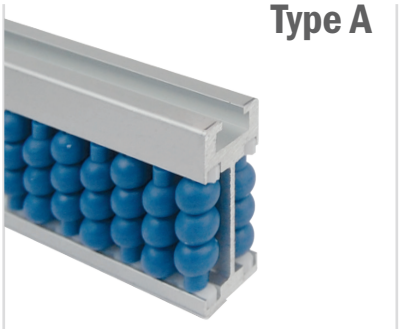

Part	Article-Nr.	Type
360	36002Y	A

Type B

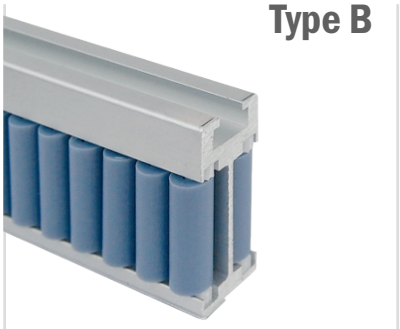

Part	Article-Nr.	Type
360	36004Y	B

Type B1

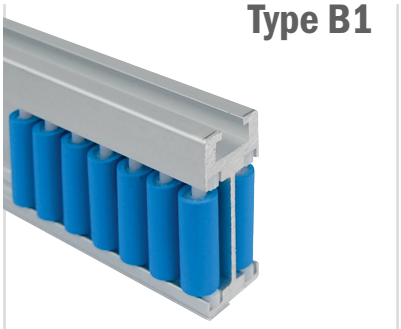

Part	Article-Nr.	Type
360	36006Y	B1

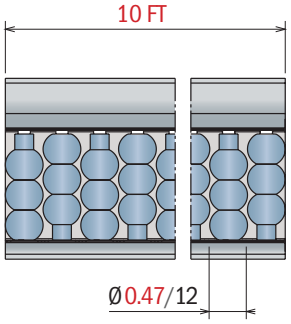

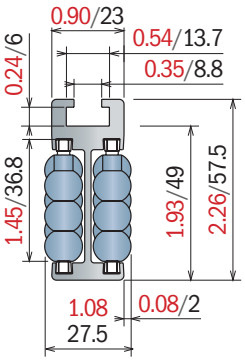

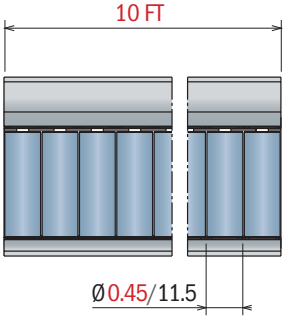

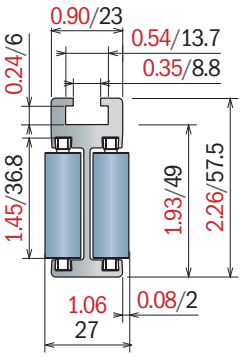

Soft roller SEBS rubber

Fixing screw: M8 hex.head or **PART 362**

Puntale / *Shoe / Einlaufschuh*

Part	Article-Nr.	Type
366	36601	machined

Material:
Guide: Anodized aluminum
Rollers: Acetal Resin or SEBS rubber

361 *Roller guides*

Max fixing load M8 screw: 15 N/m

Type A

Part	Article-Nr.	Type
361	36102Y	A

Type B

Part	Article-Nr.	Type
361	36104Y	B

Type B1

Part	Article-Nr.	Type
361	36106Y	B1

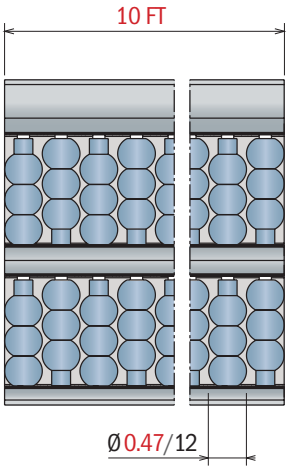

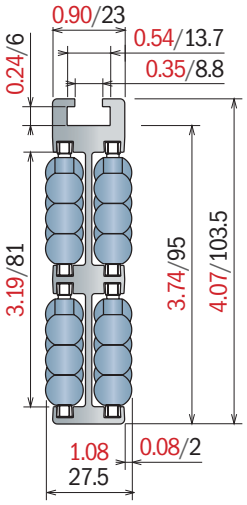

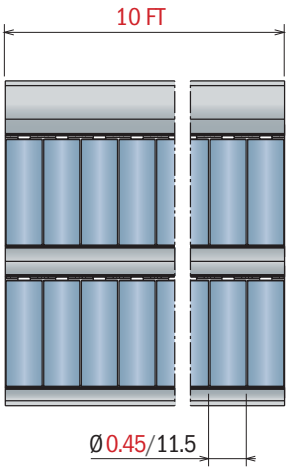

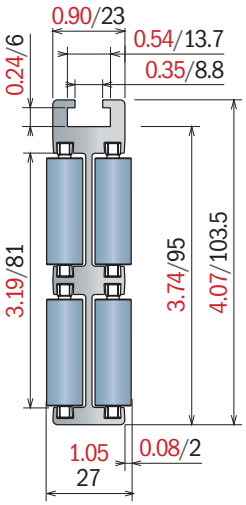

Soft roller SEBS rubber

Fixing screw: M8 hex.head or **PART 362**

Puntale / *Shoe / Einlaufschuh*

Part	Article-Nr.	Type
367	36701	machined

Material:
Shoe: PE HD
Pins: Stainless steel
Rollers: Acetal Resin or SEBS rubber

366 *Central roller shoe*

Patented

Part	Article-Nr.	Type
366	36621	A
366	36622	B
366	36623	B1

Type B1
Soft roller
SEBS rubber

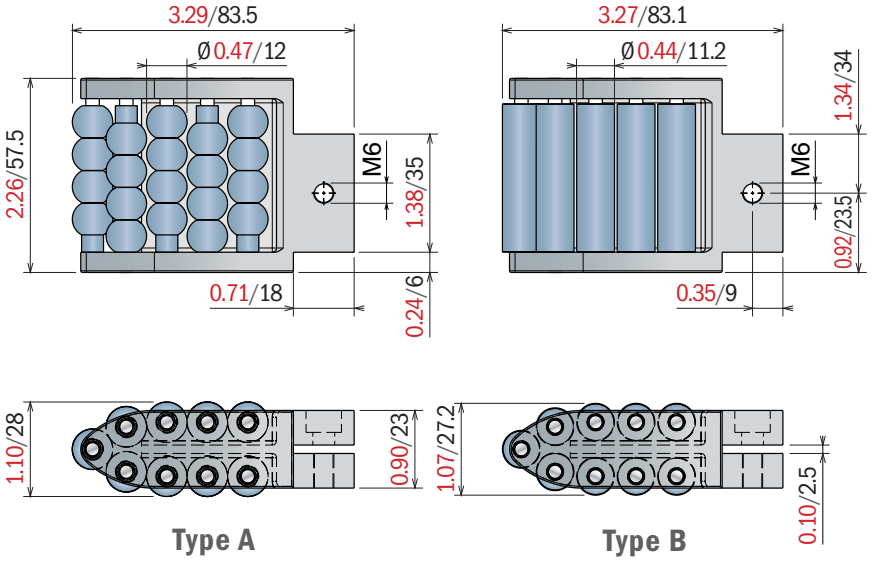

367 *Central roller shoe*

Patented

Part	Article-Nr.	Type
367	36721	A
367	36722	B
367	36723	B1

Type B1
Soft roller
SEBS rubber

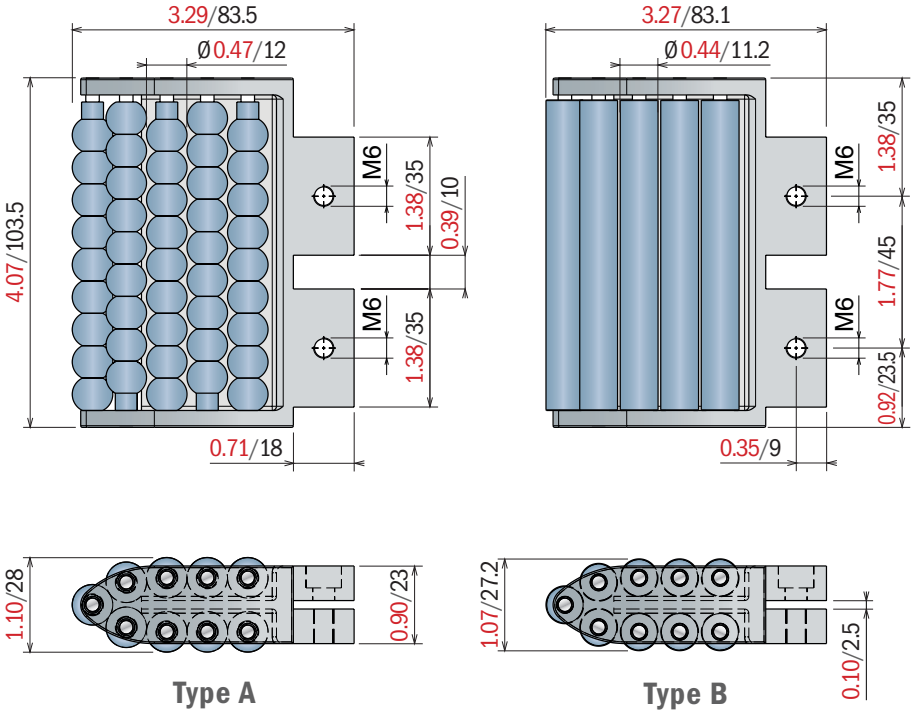

Material:
Shoe: PE HD
Pins: Staineless steel
Rollers: Acetal Resin or SEBS rubber

364 *Side roller shoe*

Patented

Part	Article-Nr.	Type
364	36421	A
364	36422	B
364	36423	B1

Type B1
Soft roller
SEBS rubber

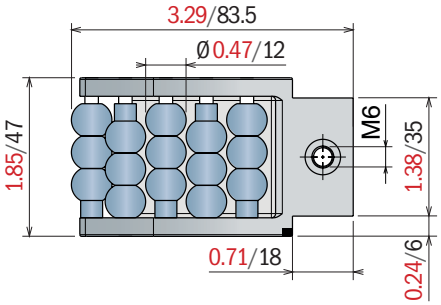

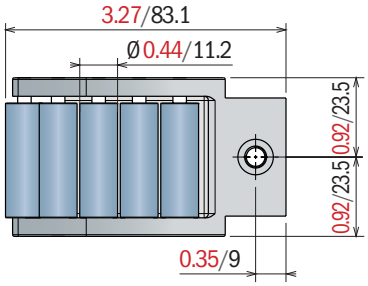

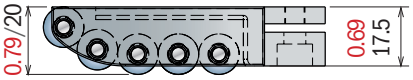

Type A

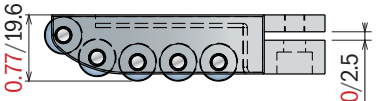

Type B

365 *Side roller shoe*

Patented

Part	Article-Nr.	Type
365	36521	A
365	36522	B
365	36523	B1

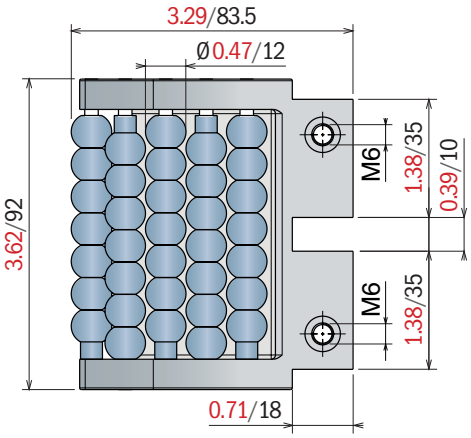

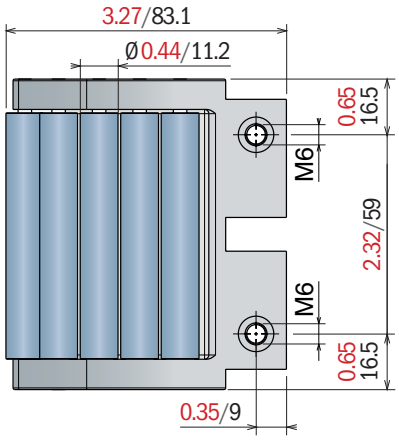

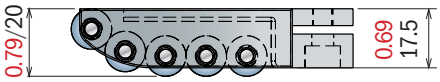

Type A

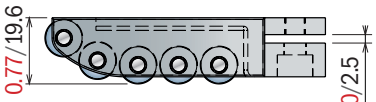

Type B

Material:
Profile: PE
Guides: Aluminum
Connecting elements: Stainless steel

395 *PE side guides*

Part	Article-Nr.	L
395	39501Y	10 FT

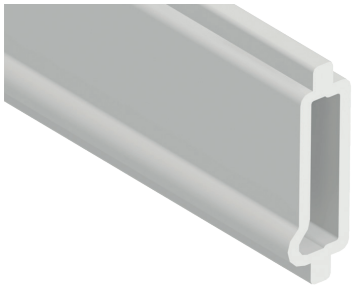

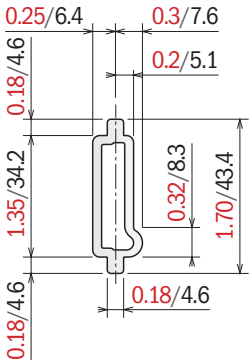

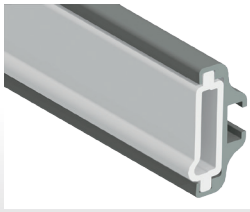

362 *T-bolt*

Part	Article-Nr.
362	36251

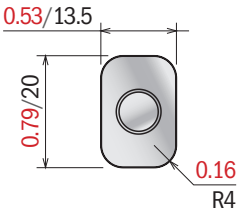

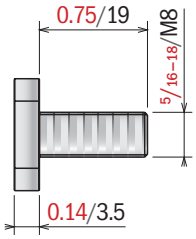

358 *Aluminum guides*

Part	Article-Nr.	Version	Min. radius in-mm
358	35800Y	Single-lateral	9.84/250 10 FT
359	35900Y	Double-lateral	19.68/500 10 FT
360	36000Y	Single-central	19.68/500 10 FT
361	36100Y	Double-central	29.53/750 10 FT

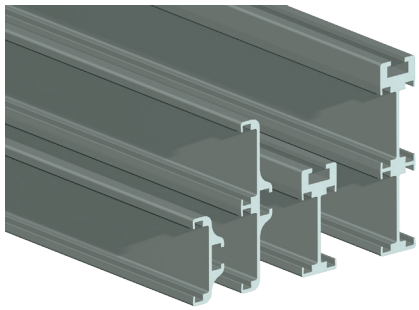

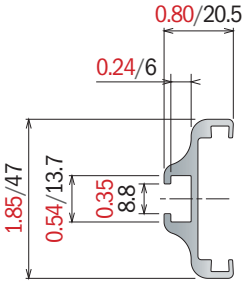

35800

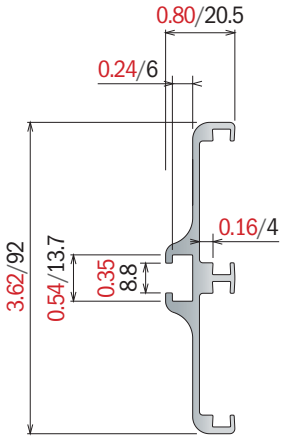

35900

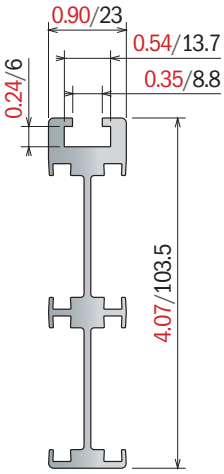

36100

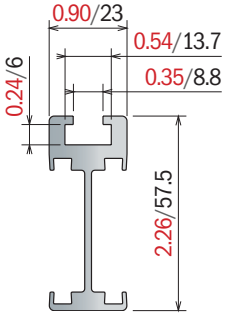

36000

333 *Connecting elements*

Part	Article-Nr.
333	33301

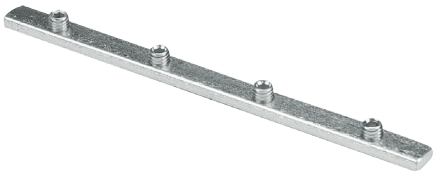

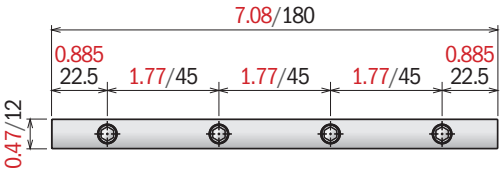

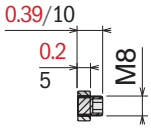

Material:
Rollers: Acetal Resin
Connection module: PA
Metal Profile and screws: Stainless steel

353

Accumulation roller guides

Part	Article-Nr.	A	Pin	Pin DIA in-mm
353	35301	1 m	PA	0.24/6
353	35302	2 m	PA	0.24/6
353	35303	3 m	PA	0.24/6

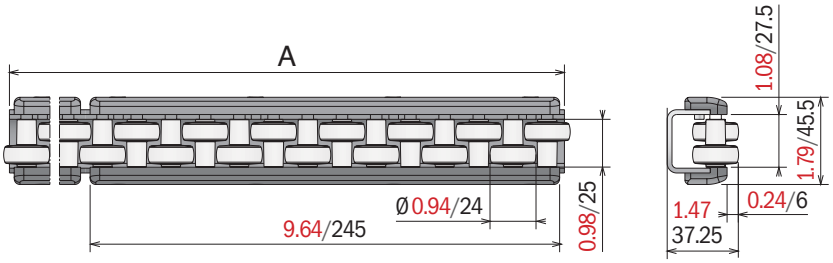

354

Accumulation roller guides

Part	Article-Nr.	A	Pin	Pin DIA in-mm
354	35401	1 m	PA	0.24/6
354	35402	2 m	PA	0.24/6
354	35403	3 m	PA	0.24/6

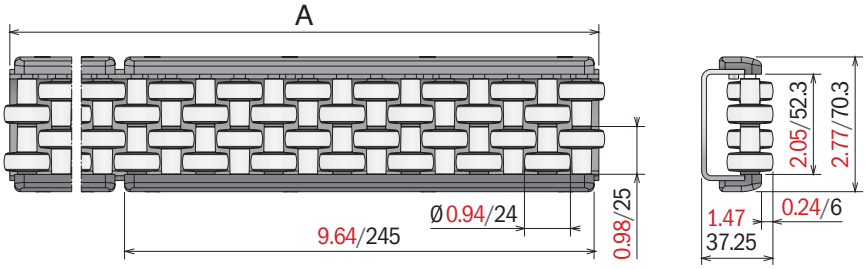

355

Accumulation roller guides

Part	Article-Nr.	A	Pin	Pin DIA in-mm
355	35501	1 m	SS	0.24/6
355	35502	2 m	SS	0.24/6
355	35503	3 m	SS	0.24/6

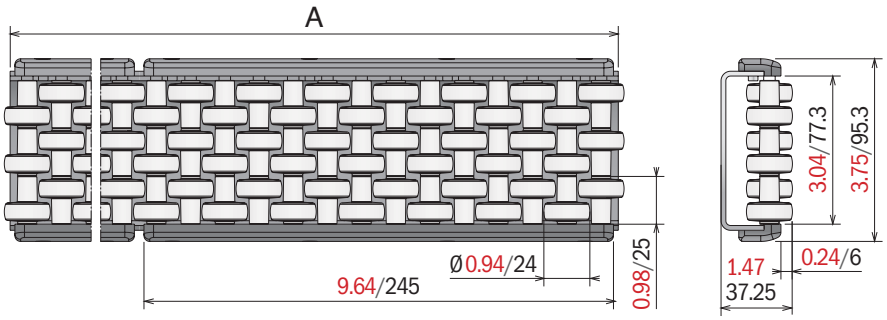

Material:
Acetal Resin

363 *Flexible roller guide*

Part	Article-Nr.	Type	A
363	36301	A	0.31/8
363	36302	B	0.31/8
363	36303	A	0.39/10
363	36304	B	0.39/10

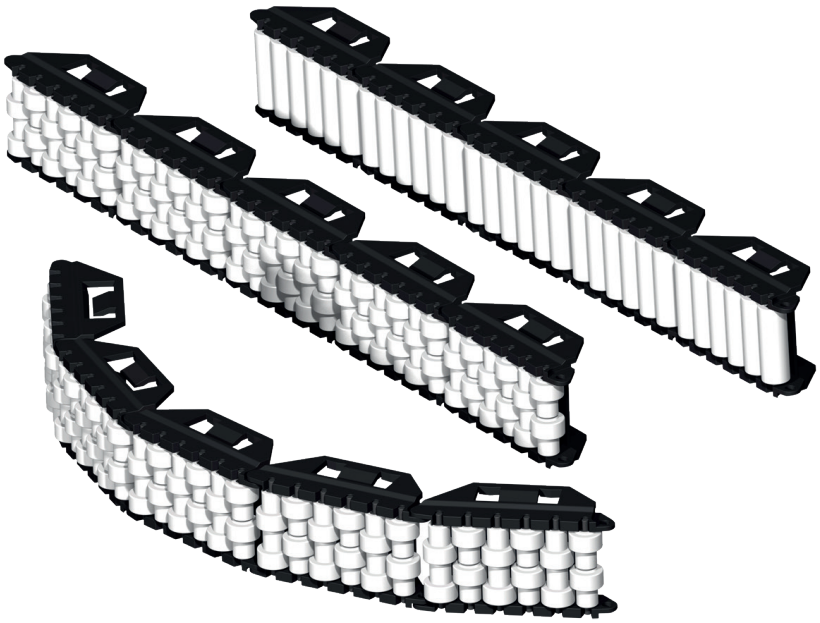

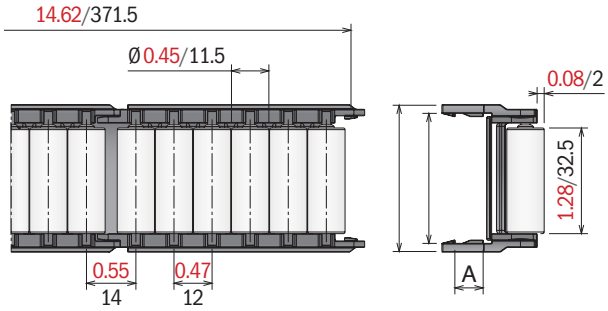

Type A

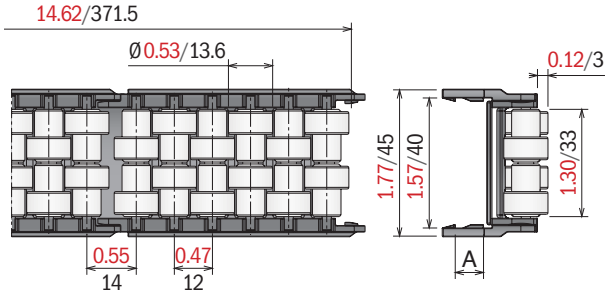

Type B

Curvature radius

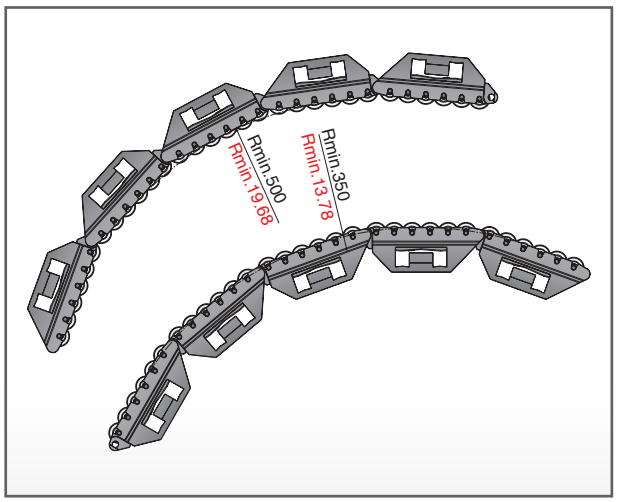

Fixing with plate and metal profile

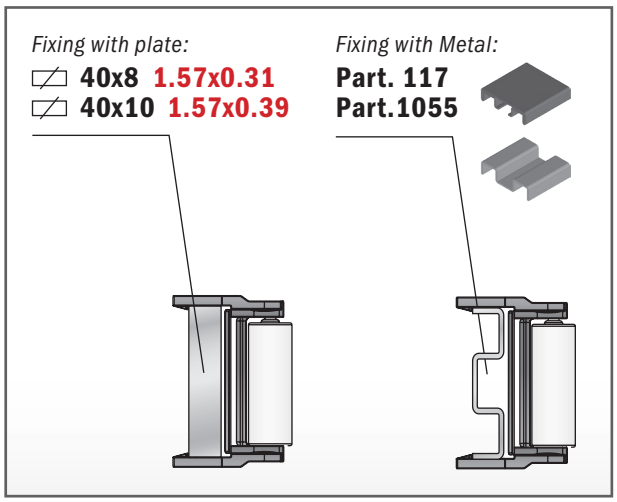

396 *Flexible roller guide*

Part	Article-Nr.	Type
396	39601	A
396	39602	B

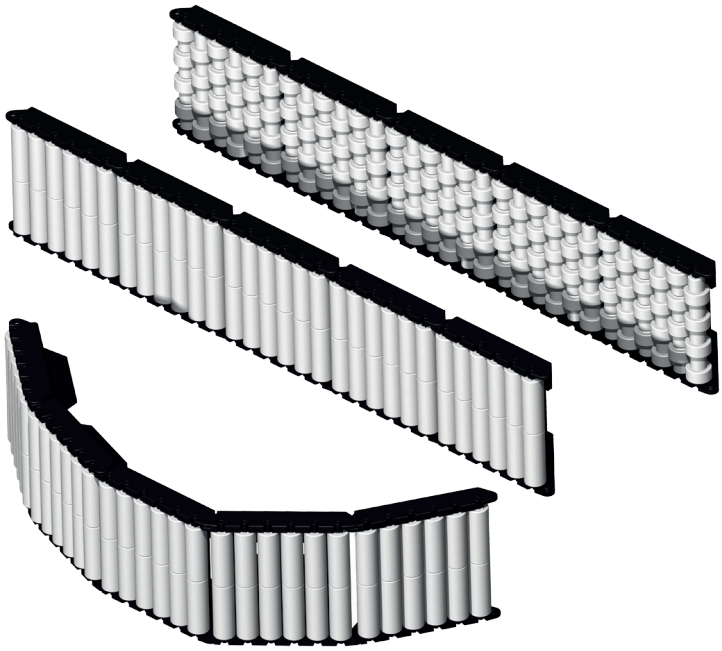

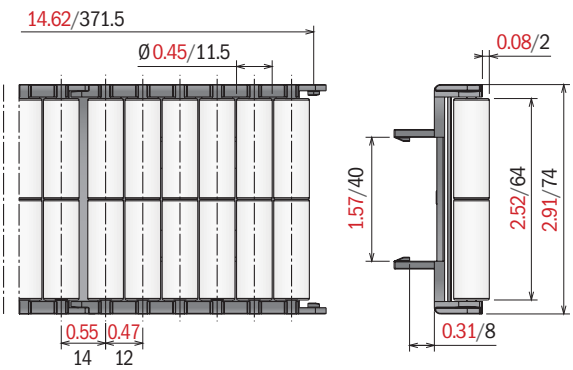

Type A

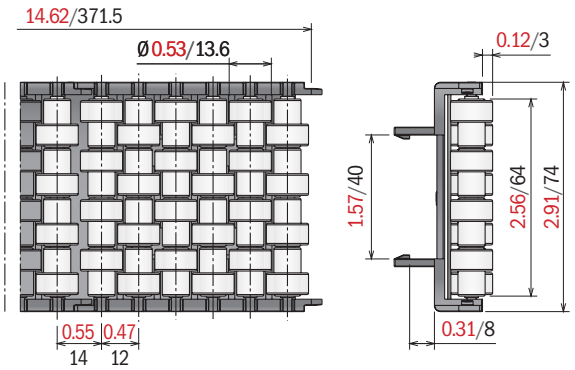

Type B

Curvature radius

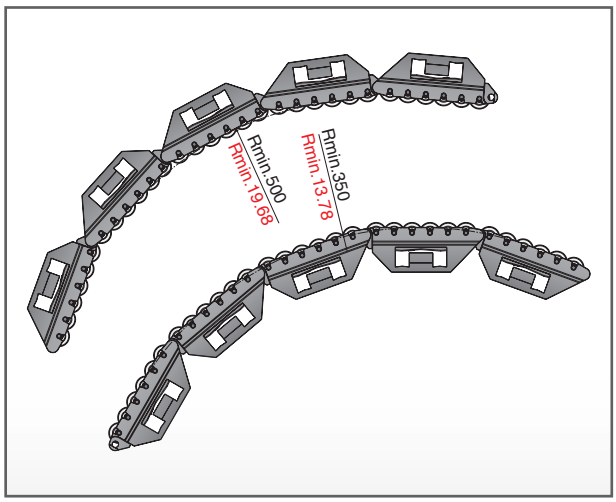

Fixing with plate and metal profile

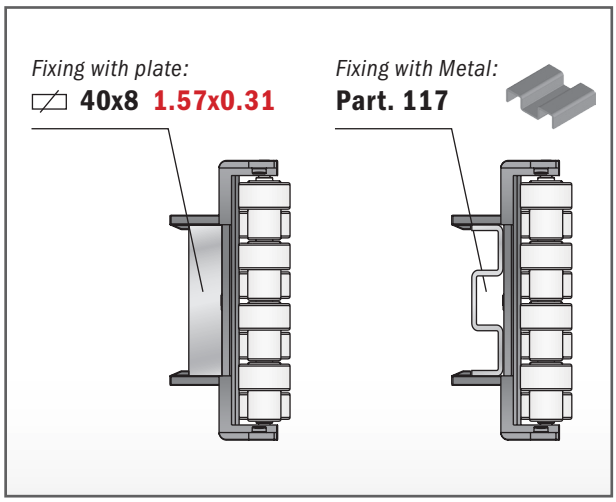

Material:
Moduls: Acetal resin
Pins, screws and nuts: Stainless steel
Rollers: Acetal resin or Stainless steel

368

Transfer modules L= 3,35

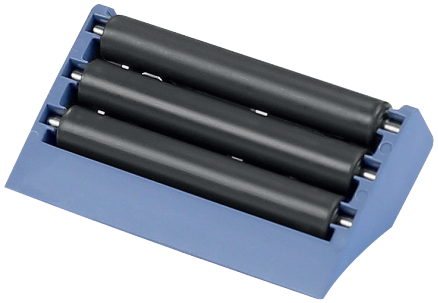

Part	Article-Nr.	Type	Roller material
368	36801	A	Acetal resin
368	36802	B	Acetal resin
368	36803	C	Acetal resin
368	36801SS	A	Stainless steel
368	36802SS	B	Stainless steel
368	36803SS	C	Stainless steel

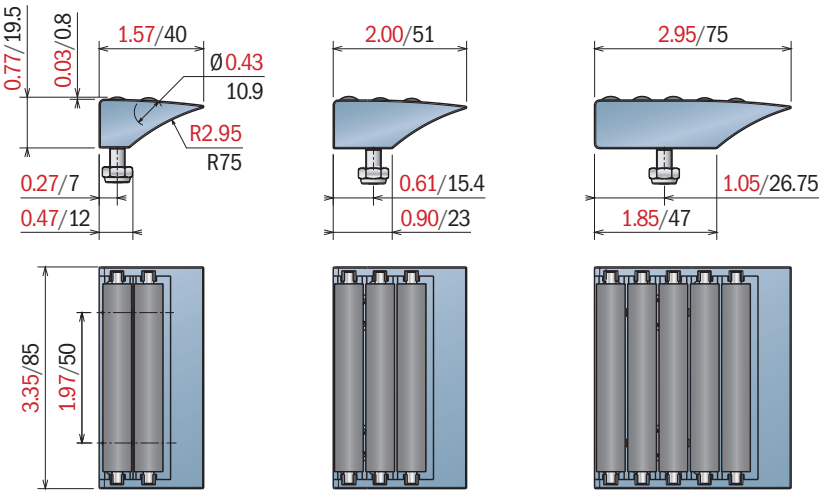

Type A Type B Type C

Smart Roll
with mini bearing in stainless steel

369

Transfer modules L= 4,53

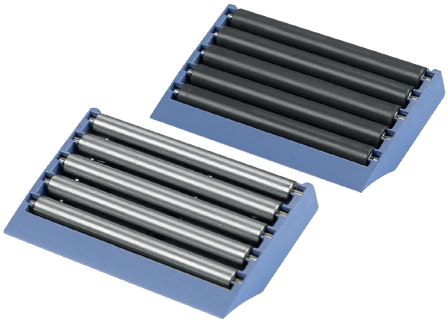

Part	Article-Nr.	Type	Roller material
369	36901	A	Acetal resin
369	36902	B	Acetal resin
369	36903	C	Acetal resin
369	36901SS	A	Stainless steel
369	36902SS	B	Stainless steel
369	36903SS	C	Stainless steel

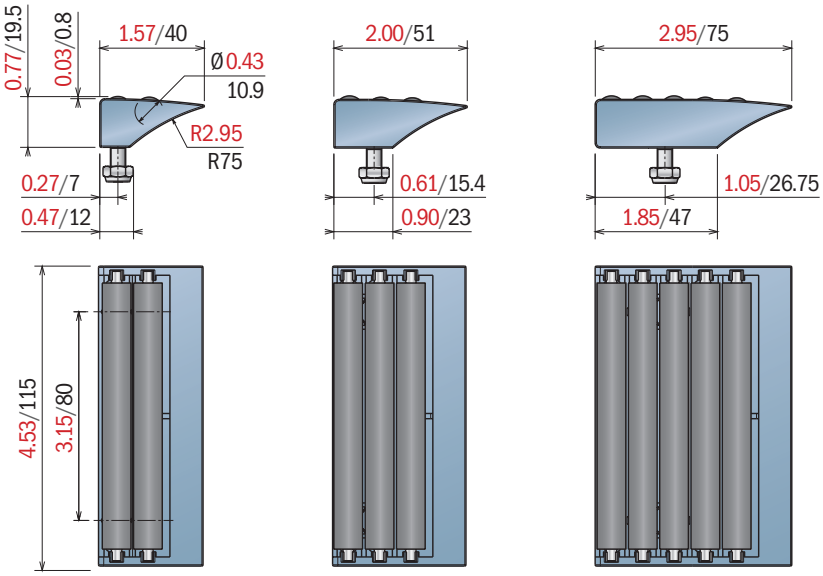

Type A Type B Type C

Smart Roll
with mini bearing in stainless steel

Material:
Moduls: Acetal resin
Pins, screws and nuts: Stainless steel
Rollers: Acetal resin or Stainless steel

370

Part	Article-Nr.	Type
370	37001	A
370	37002	B
370	37003	C

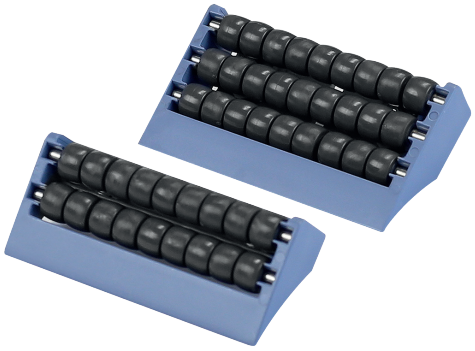

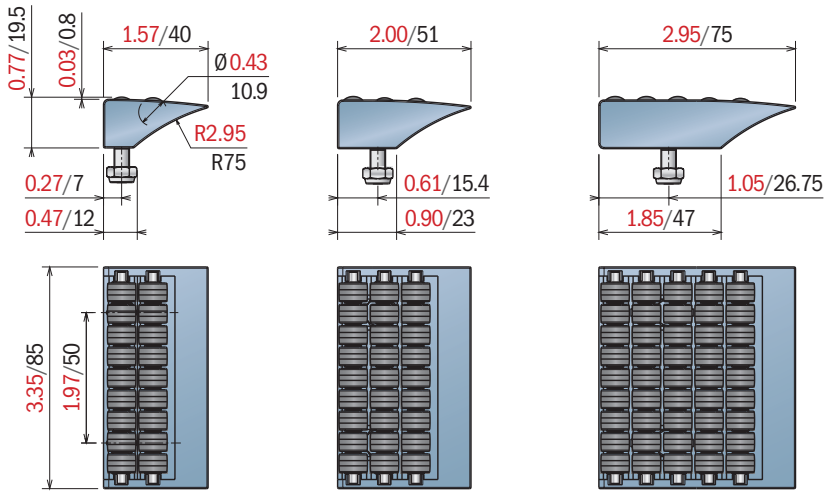

Type A Type B Type C

371

Transfer modules L= 4,53

Part	Article-Nr.	Type
371	37101	A
371	37102	B
371	37103	C

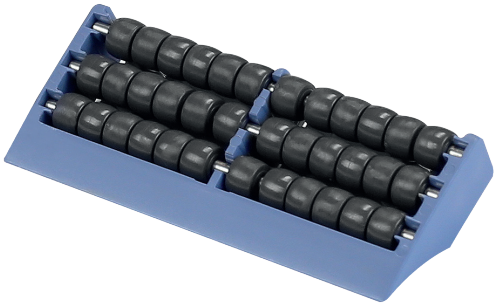

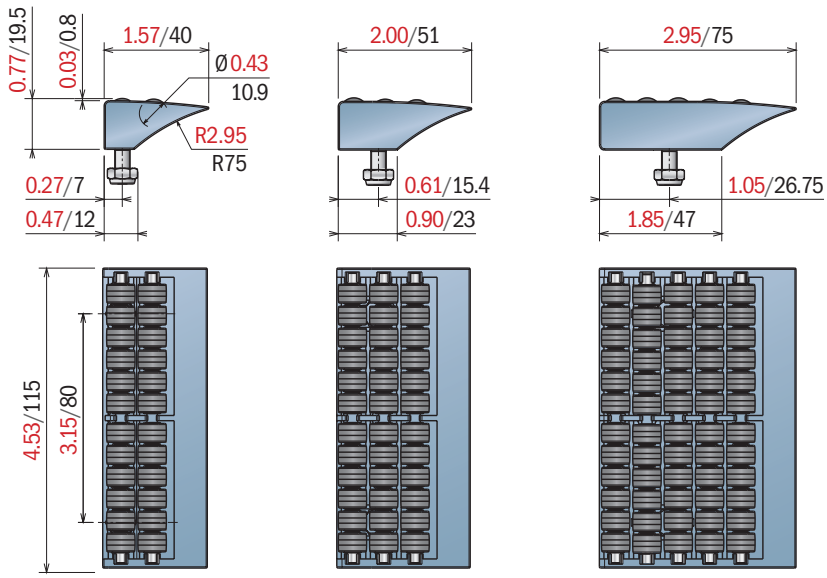

Type A Type B Type C

Material:
Base: Aluminum
Adapter parts: Stainless steel

199 *Chain mounting block*

Part	Article-Nr.	A in-mm	B in-mm	C in-mm
199	19980	1.77/45	3.15/80	1.57/40
199	19981	2.36/60	3.93/100	2.16/55
199	19982	1.77/45	3.15/80	1.57/40

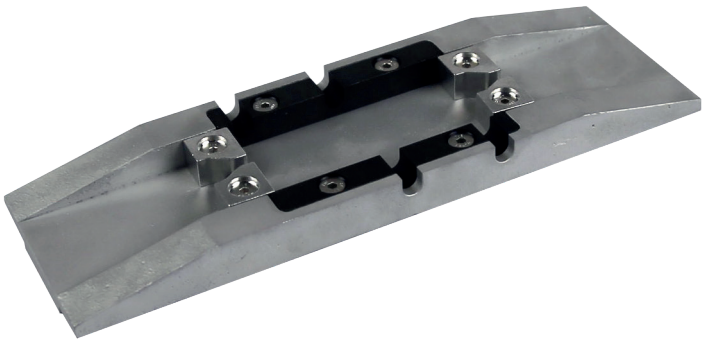

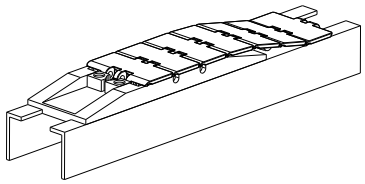

Chain mounting block application

19980

Chain mounting block for series:

Steel chain:
812/815 (GT)
881 M (GT)

Plastic chain:
820 (GT)
831

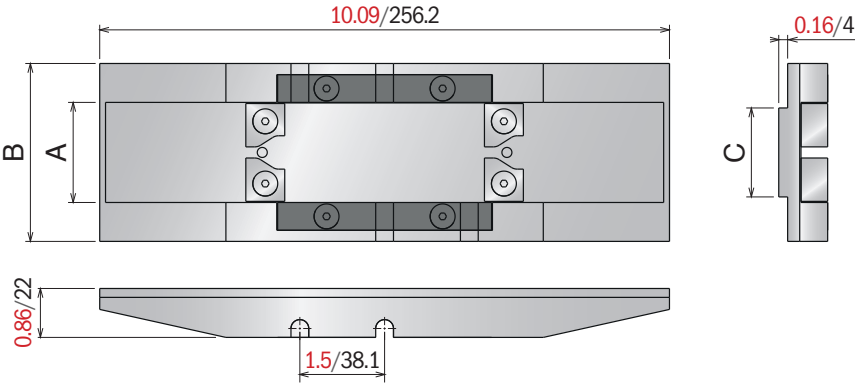

19981

Chain mounting block for series:

Steel chain:
8157 (GT)
8857 M (GT/LBP)

Plastic chain:
8257 (GT/LBP)
8857 (GT/LBP)
882 Bevel

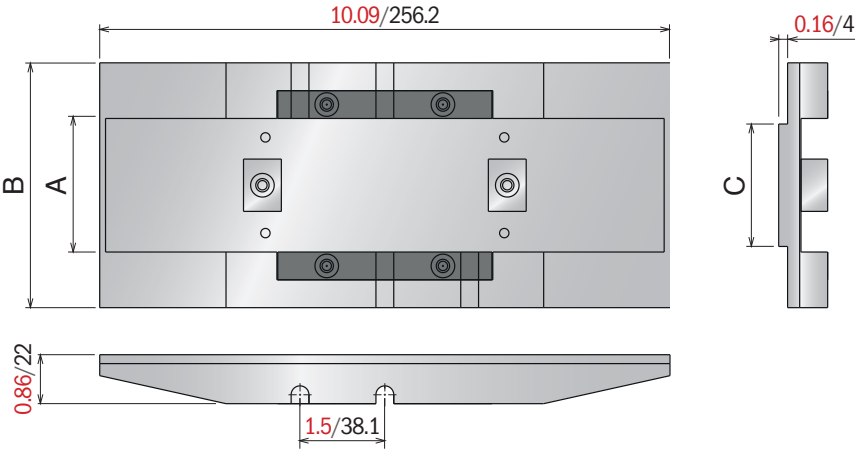

19982

Chain mounting block for series:

Steel chain:
812/815 (GT)
881 M (GT)

Plastic chain:
828 (GT/LBP)
880 M
880 Bevel
879 M
879 Bevel

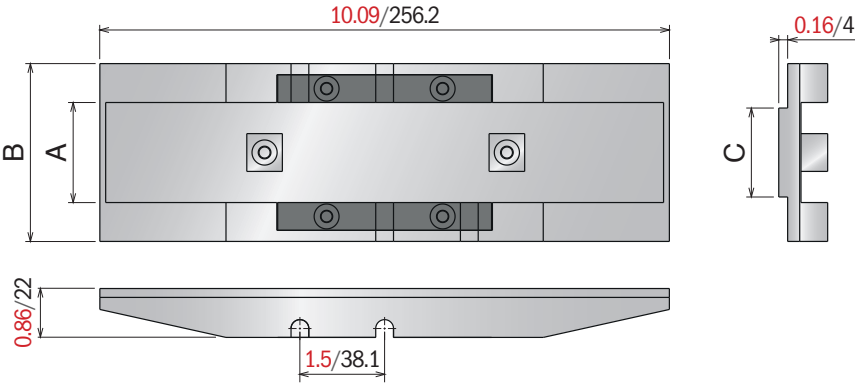

Material:
Hinges: Polyamide
Pins: Stainless steel

372 *Hinge*

Part	Article-Nr.	A in-mm	B in-mm	C in-mm	D in-mm	E in-mm
372	37201	0.43/11	0.55/14	0.41/10,5	0.25/6,5	0.24/6
372	37202	0.43/11	0.55/14	0.53/13,5	0.33/8,5	0.16/4
372	37203	0.71/18	0.83/21	0.53/13,5	0.33/8,5	0.16/4

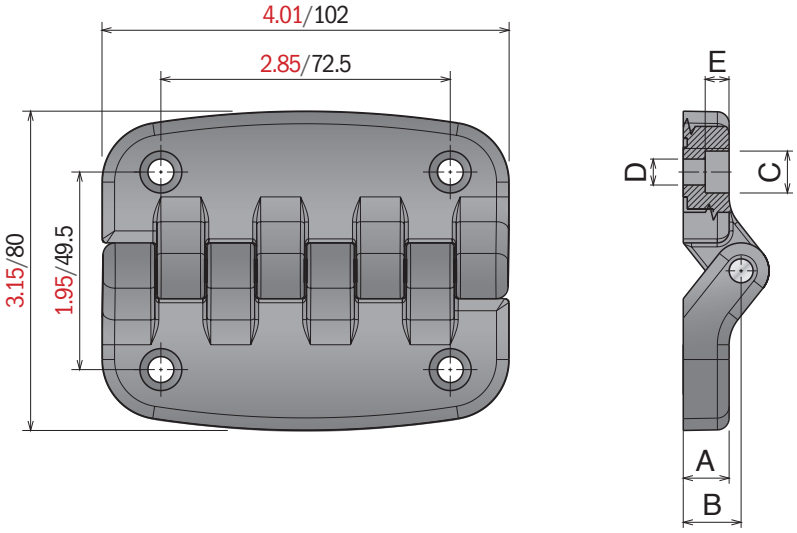

373 *Hinge*

Part	Article-Nr.	C in-mm	D in-mm	E in-mm
373	37301	0.45/10,5	0.25/6,5	0.24/6
373	37302	0.53/13,5	0.33/8,5	0.16/4

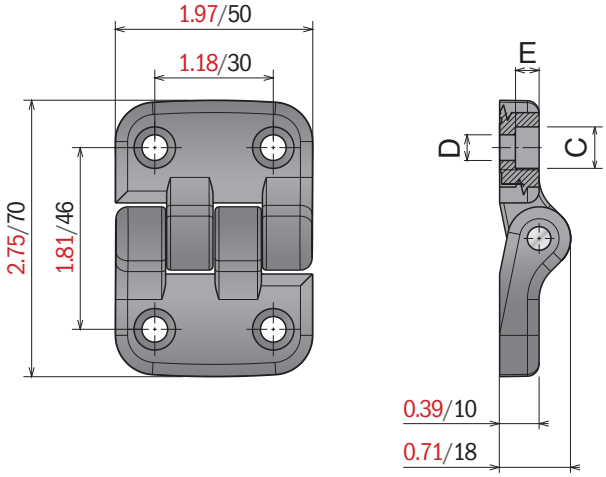

Material:
Hinges: Polyamide or Stainless steel

383 *Hinge*

Part	Article-Nr.	A in-mm	B in-mm	C in-mm	ØD in-mm	ØE in-mm	F in-mm	G in-mm
383	38301	0.94/24	0.98/25	0.57/14,5	0.18/4,5	0.55/14	1.76/44,6	1.61/41
383	38302	1.42/36	1.42/36	0.82/20,8	0.25/6,5	0.79/20	2.46/62,5	2.28/58

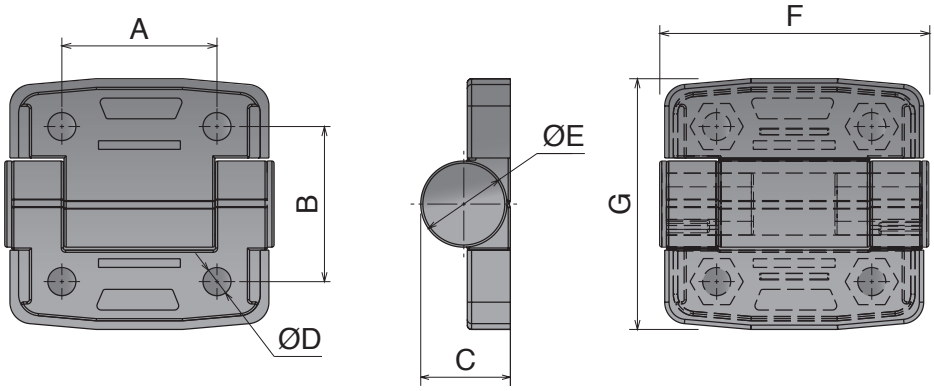

384 *SS Hinge*

Part	Article-Nr.	A in-mm	B in-mm	C in-mm	ØD in-mm	ØE in-mm	F in-mm	G in-mm
384	38401	0.79/20	1.28/32,5	0.17/4,3	0.22/5,5	0.41/10,5	1.57/40	2.00/51
384	38402	1.18/30	1.61/41	0.20/5	0.25/6,5	0.49/12,5	2.36/60	2.79/71

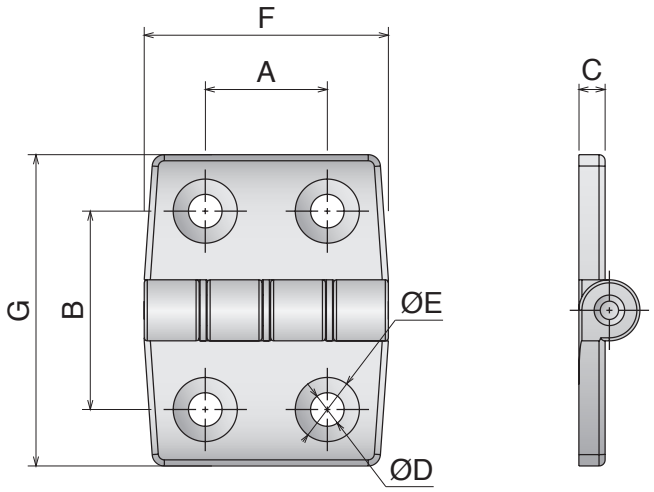

385 Soft touch handle

Part	Article-Nr.
385	38501

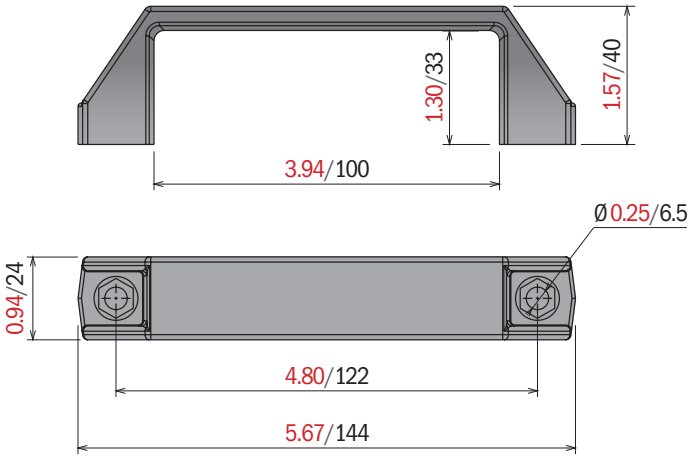

386 Handle

Part	Article-Nr.	A in-mm	B in-mm	C in-mm	Ød in-mm	ØD in-mm	E in-mm	F in-mm
386	38601	4.72/120	5.51/140	1.57/40	0.35/8,8	0.51/13	0.96/24,5	0.63/16
386	38602	6.30/160	7.28/185	1.89/48	0.35/8,8	0.59/15	1.14/29	0.63/16

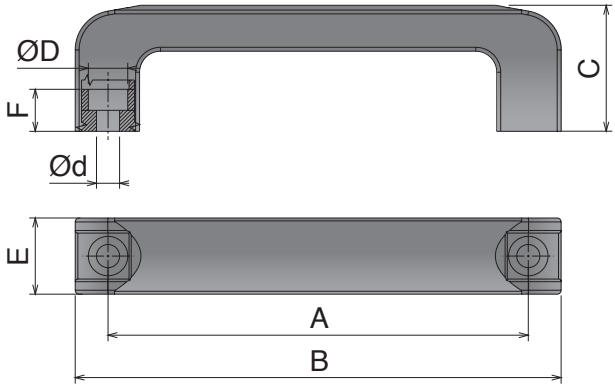

397 Stainless Steel handle

Part	Article-Nr.	A in-mm
397	39701	3.74/95
397	39702	3.94/100
397	39703	4.33/110

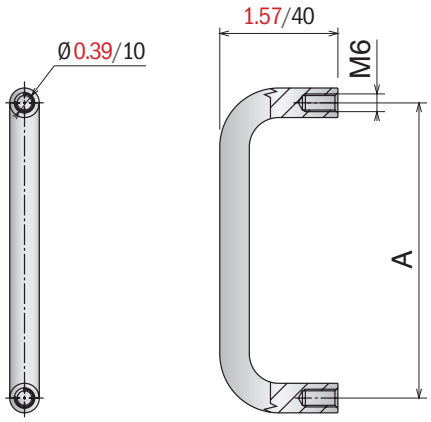

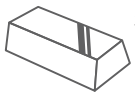

Stainless steel AISI 304

Material:
Handels: Polyamide
Female insert: Nichel plated brass
Male insert: Stainless steel

374 *Adjustable handle*

Part	Article-Nr.	A in-mm	B in-mm	C in-mm	D in-mm	E in-mm
374	37401Y	2.95/75	1.61/41	0.51/13	5/16-18	0.43/11
374	37402Y	3.62/92	2.08/53	0.63/16	3/8-16	0.63/16

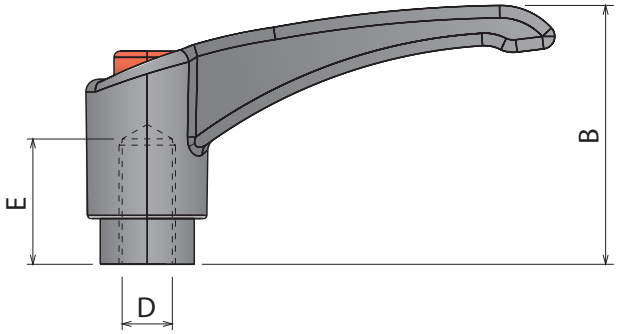

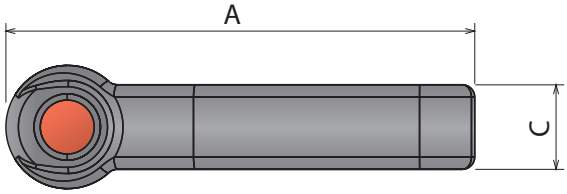

375 *Adjustable handle*

Part	Article-Nr.	A in-mm	B in-mm	C in-mm	D in-mm	E in-mm
375	37503Y	2.95/75	1.61/41	0.51/13	1/4-20	0.78/20
375	37504Y	2.95/75	1.61/41	0.51/13	1/4-20	0.98/25
375	37501Y	2.95/75	1.61/41	0.51/13	5/16-18	0.78/20
375	37505Y	3.62/92	2.08/53	0.63/16	3/8-16	0.78/20
375	37502Y	3.62/92	2.08/53	0.63/16	3/8-16	0.98/25
375	37506Y	3.62/92	2.08/53	0.63/16	3/8-16	1.18/30
375	37507Y	3.62/92	2.08/53	0.63/16	3/8-16	1.57/40

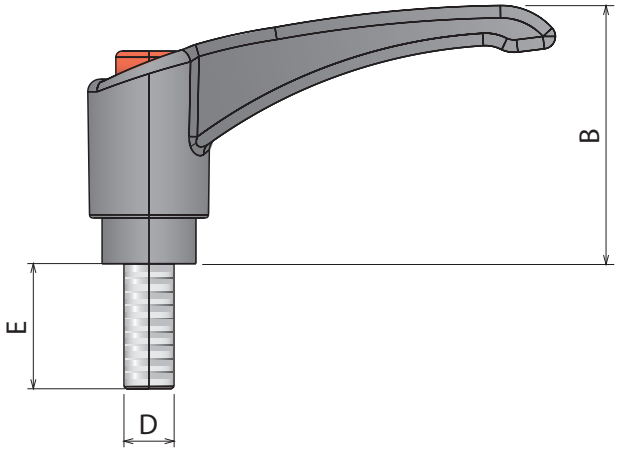

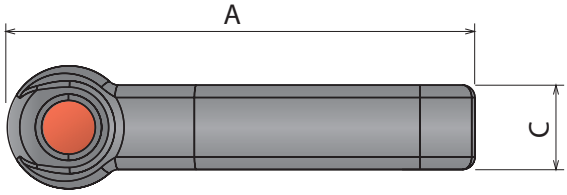

Material:
Clamps: Polyamide
Screws and nuts: Stainless steel

378 *T-clamp*

Part	Article-Nr.	A in-mm	B in-mm
378	37802Y	½/12,7	-
378	37801	0.39/10	0.31/8
378	37802	0.47/12	0.39/10
378	37803	0.55/14	0.47/12

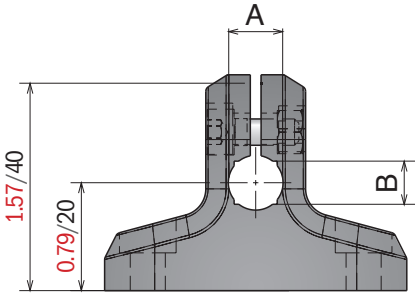

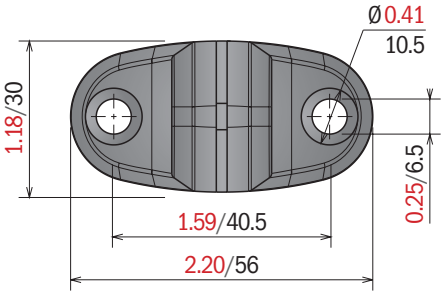

Material:
Clamps: Polyamide
Screws and nuts: Stainless steel

379 *Clamp for reflector*

Part	Article-Nr.	A in-mm	B in-mm
379	37902Y	½/12,7	-
379	37901	0.39/10	0.31/8
379	37902	0.47/12	0.39/10
379	37903	0.55/14	0.47/12

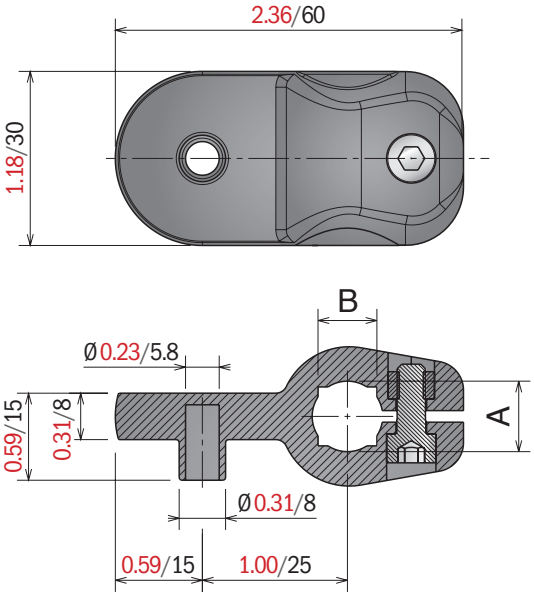

380 *Clamp for photocells or sensors*

Part	Article-Nr.	A in-mm	B in-mm
380	38002Y	½/12,7	-
380	38001	0.39/10	0.31/8
380	38002	0.47/12	0.39/10
380	38003	0.55/14	0.47/12

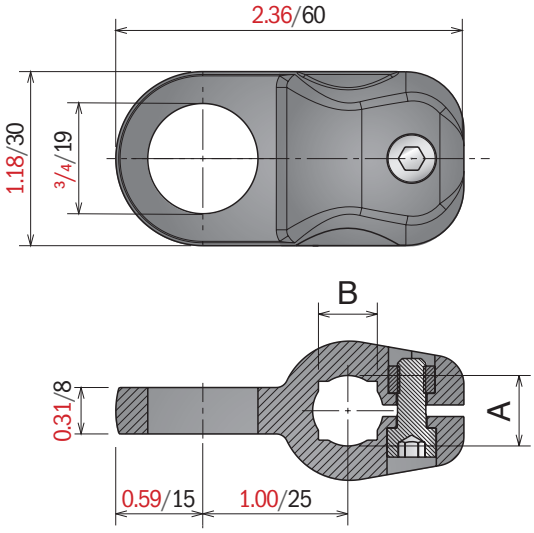

Material:
Clamps: Polyamide
Screws and nuts: Stainless steel

381 *Cross clamp*

Part	Article-Nr.	A in-mm	B in-mm	C in-mm	D in-mm
381	38100Y	½/12.7	-	½/12.7	-
381	38102	⅝/16	-	⅝/16	-
381	38104Y	¾/19.05	-	¾/19.05	-
381	38101	0.55/14	0.55/14	0.55/14	0.55/14
381	38103	0.70/18	-	0.70/18	-
381	38104	0.79/20	0.79/20	0.79/20	0.79/20

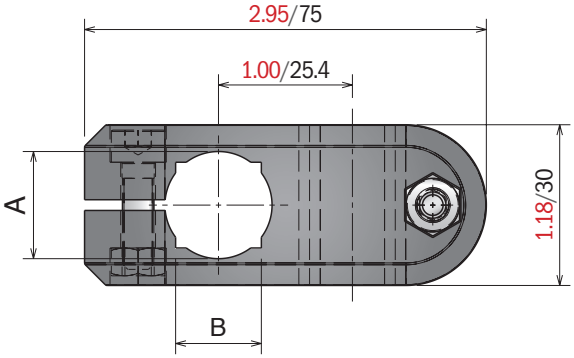

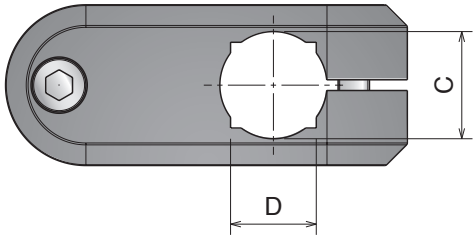

382 *Cross clamp*

Part	Article-Nr.	A in-mm	B in-mm	C in-mm	D in-mm
382	38202Y	½/12.7	-	½/12.7	-
382	38201	0.39/10	0.31/8	0.39/10	0.31/8
382	38202	0.47/12	0.39/10	0.47/12	0.39/10
382	38203	0.55/14	0.47/12	0.55/14	0.47/12

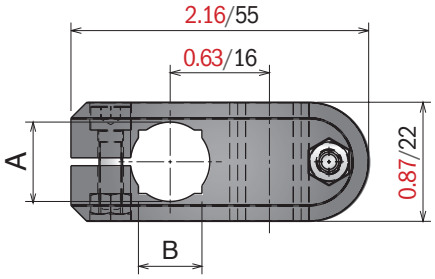

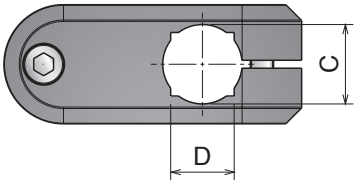

Material:
Body: PA
Knob: PA+ nickel plated bross
Eyebott and washer: Stainless steel

376 *Extra Cross Block*

Part	Article-Nr.	A in-mm	B in-mm
376	37601	1.18x1.18/30x30	5/8/16
376	37602	1.57x1.57/40x40	5/8/16
376	37603	1.57x1.57/40x40	0.79/20
376	37602Y	1.50x1.50/38.1x38.1	5/8/15.875
376	37603Y	1.50x1.50/38.1x38.1	3/4/19.05

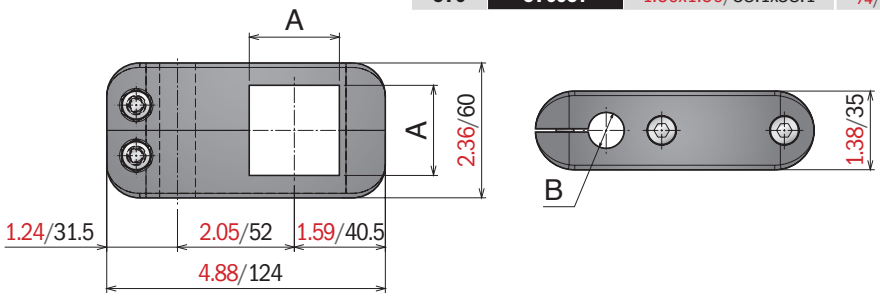

Extra Cross Block with handle

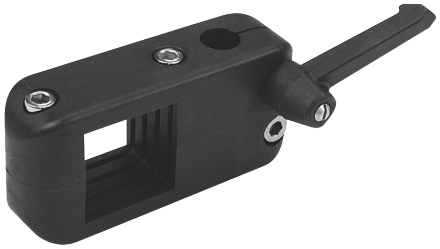

Part	Article-Nr.	A in-mm	B in-mm
376	37611	1.18x1.18/30x30	5/8/16
376	37612	1.57x1.57/40x40	5/8/16
376	37613	1.57x1.57/40x40	0.79/20
376	37612Y	1.50x1.50/38.1x38.1	5/8/15.875
376	37613Y	1.50x1.50/38.1x38.1	3/4/19.05

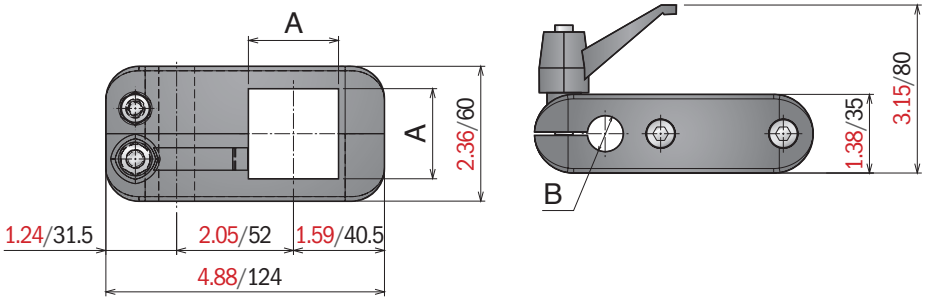

Extra Cross Block with handles

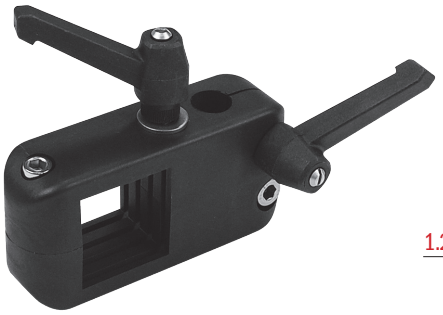

Part	Article-Nr.	A in-mm	B in-mm
376	37621	1.18x1.18/30x30	5/8/16
376	37622	1.57x1.57/40x40	5/8/16
376	37623	1.57x1.57/40x40	0.79/20
376	37622Y	1.50x1.50/38.1x38.1	5/8/15.875
376	37623Y	1.50x1.50/38.1x38.1	3/4/19.05

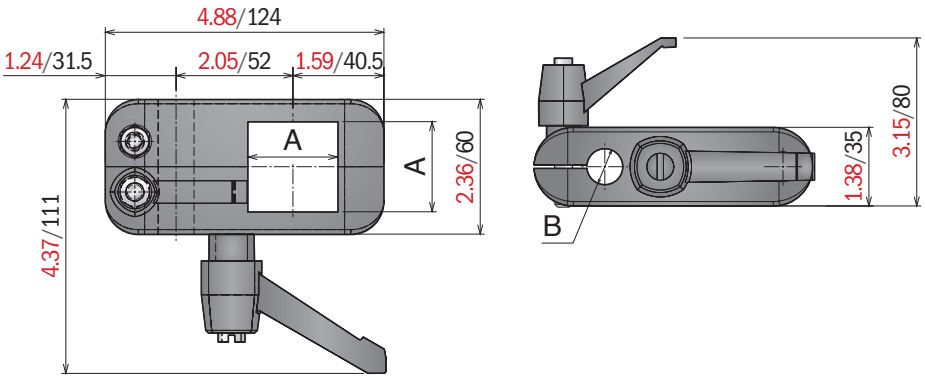

Material:
Body: PA
Knob: PA+ nickel plated bross
Eyebott and washer: Stainless steel

391 *Cross clamp*

Part	Article-Nr.	ØA in-mm	ØA in-mm
391	39101	½/12	½/12
391	39102	⅝/16	⅝/16
391	39104	½/12	⅝/16

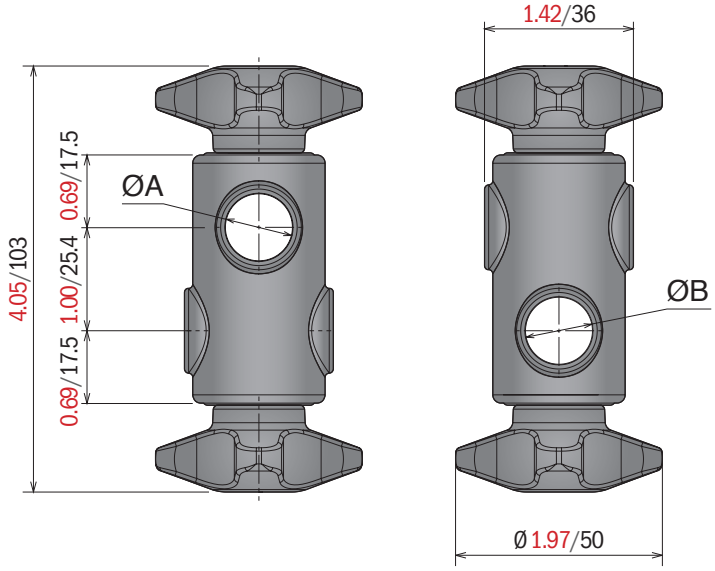

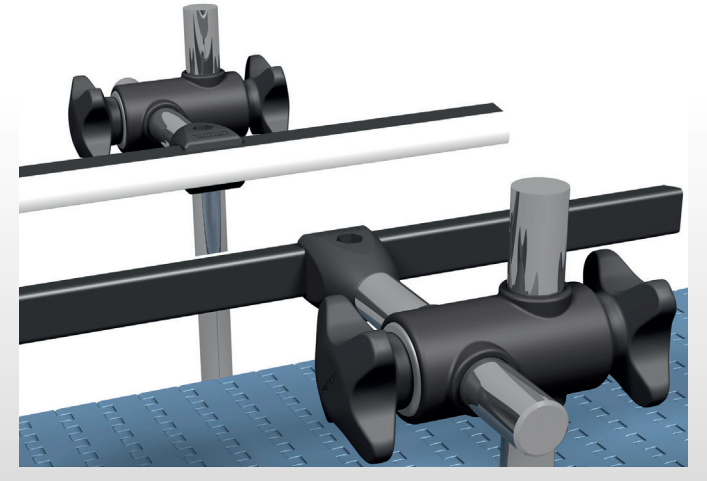

Material:
Support: Stainless steel
Clamps: PA

387 *Drip Tray Supports*

Max load capacity 20 Kg

Part	Article-Nr.	L in-mm	Type
387	38701	7.09/180	A
387	38702	9.84/250	A
387	38703	7.09/180	B
387	38704	9.84/250	B
387	38705	11.02/280	B
387	38706	9.68/246	C
387	38707	15.59/396	C
387	38708	7.09/180	D
387	38709	9.84/250	D

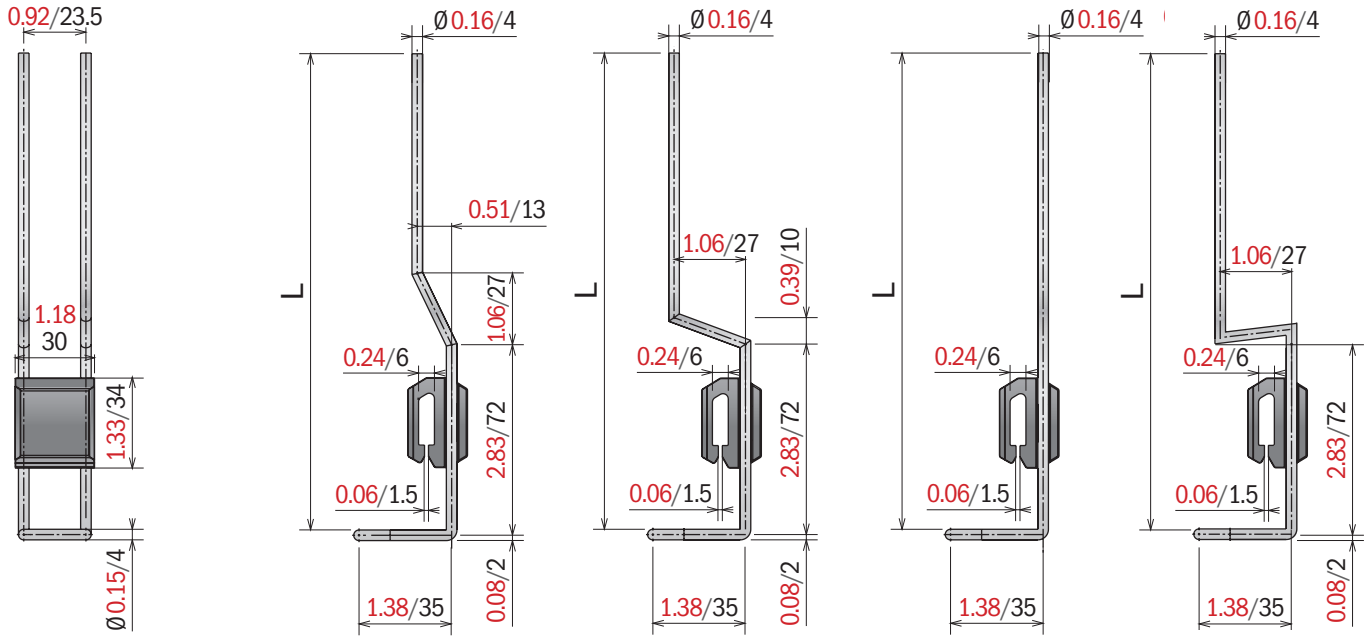

388 *Fixing washer*

Part	Article-Nr.	Type
388	38801	A
388	38802	B

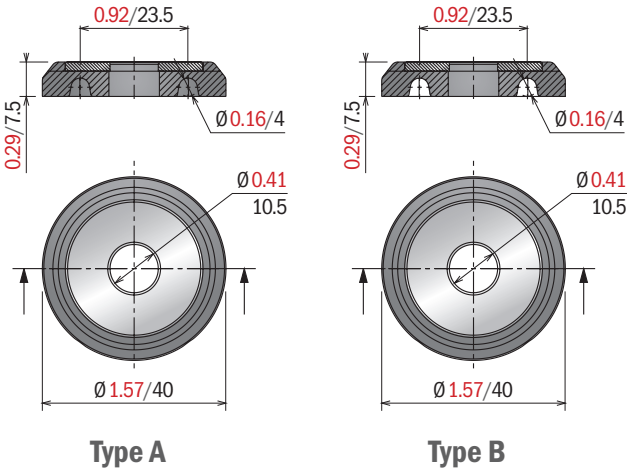

305

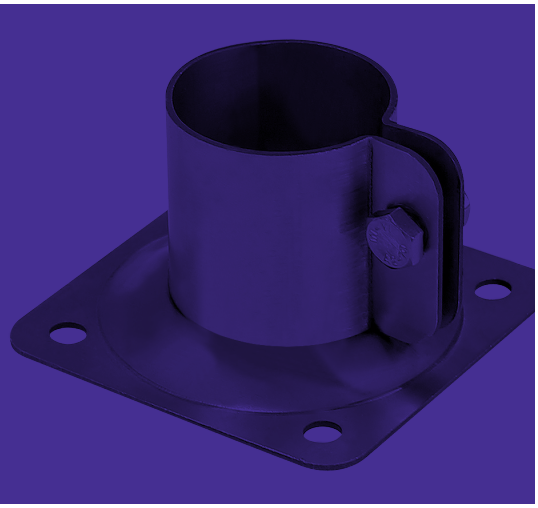

401 Pag 306

402 Pag 306

403 Pag 307

404 Pag 307

407 Pag 308

408 Pag 308

409 Pag 309

410 Pag 310

411 Pag 310

426 Pag 311

427 Pag 312

425 Pag 312

413 Pag 313

417 Pag 313

414 Pag 314

419 Pag 315

415 Pag 316

416 Pag 317

428 Pag 318

429 Pag 318

430 Pag 318

Conveyor support components

Material:
Base: Polyamide
Screws and washers: Stainless steel
Inserts nuts: nickel plated brass

401 *Bipod*

Part	Article-Nr.	ØA in-mm	Insert
401	40101	1.90/48,3	M16
401	40105	2.00/50,9	M16
401	40102	2.375/60,3	M16
401	40101Y	1.90/48,3	5/8-11
401	40105Y	2.00/50,9	5/8-11
401	40102Y	2.375/60,3	5/8-11

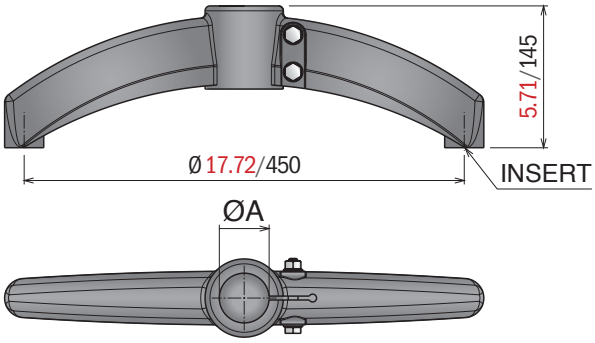

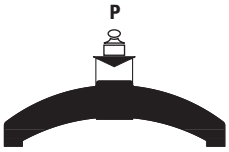

Tube sliding load resistance
P=L1750 lbF/8000N
Max applicable load
P=2150 lbF/9600N
Bolts tightening torque
18,50 lbF.ft/25 N.m

402 *Bipod 180° with connector*

Part	Article-Nr.	ØA in-mm	ØB in-mm	Insert
402	40201	1.90/48,3	1.90/48,3	M16
402	40205	2.00/50,9	1.90/48,3	M16
402	40202	2.375/60,3	1.90/48,3	M16
402	40203	1.90/48,3	1.66/42,4	M16
402	40206	2.00/50,9	1.66/42,4	M16
402	40204	2.375/60,3	1.66/42,4	M16
402	40201Y	1.90/48,3	1.90/48,3	5/8-11
402	40205Y	2.00/50,9	1.90/48,3	5/8-11
402	40202Y	2.375/60,3	1.90/48,3	5/8-11
402	40203Y	1.90/48,3	1.66/42,4	5/8-11
402	40206Y	2.00/50,9	1.66/42,4	5/8-11
402	40204Y	2.375/60,3	1.66/42,4	5/8-11

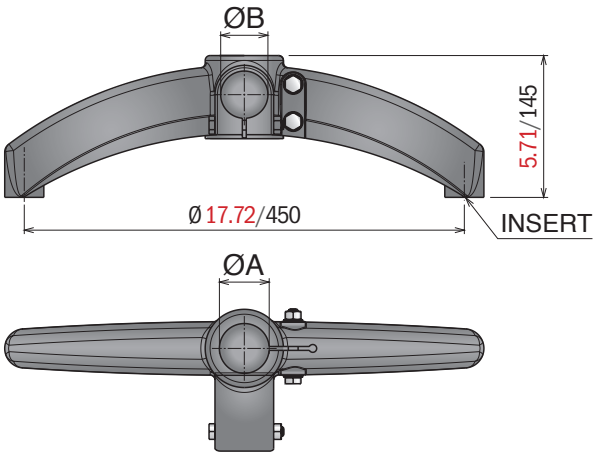

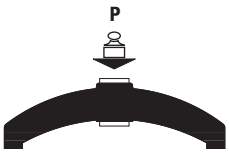

Tube sliding load resistance
P=L1750 lbF/8000N
Max applicable load
P=1750 lbF/8000N
Bolts tightening torque
18,50 lbF.ft/25 N.m

Material:
Base: Polyamide
Screws and washers: Stainless steel
Inserts nuts: nickel plated brass

403 *Bipod 120° with connector*

Part	Article-Nr.	ØA in-mm	ØB in-mm	Insert
403	40301	1.90/48,3	1.90/48,3	M16
403	40305	2.00/50,9	1.90/48,3	M16
403	40302	2.375/60,3	1.90/48,3	M16
403	40303	1.90/48,3	1.66/42,4	M16
403	40306	2.00/50,9	1.66/42,4	M16
403	40304	2.375/60,3	1.66/42,4	M16
403	40301Y	1.90/48,3	1.90/48,3	5/8-11
403	40305Y	2.00/50,9	1.90/48,3	5/8-11
403	40302Y	2.375/60,3	1.90/48,3	5/8-11
403	40303Y	1.90/48,3	1.66/42,4	5/8-11
403	40306Y	2.00/50,9	1.66/42,4	5/8-11
403	40304Y	2.375/60,3	1.66/42,4	5/8-11

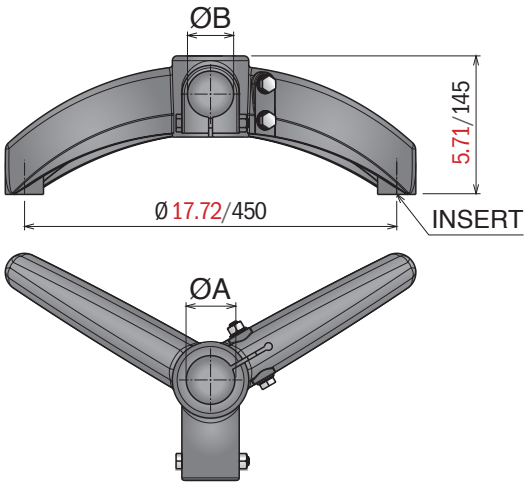

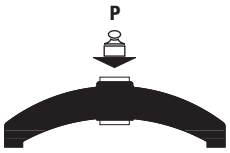

Tube sliding load resistance
P=L1750 lbF/8000N
Max applicable load
P=1750 lbF/8000N
Bolts tightening torque
18,50 lbF.ft/25 N.m

404 *Tripod*

Part	Article-Nr.	ØA in-mm	Insert
404	40401	1.90/48,3	M16
404	40405	2.00/50,9	M16
404	40402	2.375/60,3	M16
404	40401Y	1.90/48,3	5/8-11
404	40405Y	2.00/50,9	5/8-11
404	40402Y	2.375/60,3	5/8-11

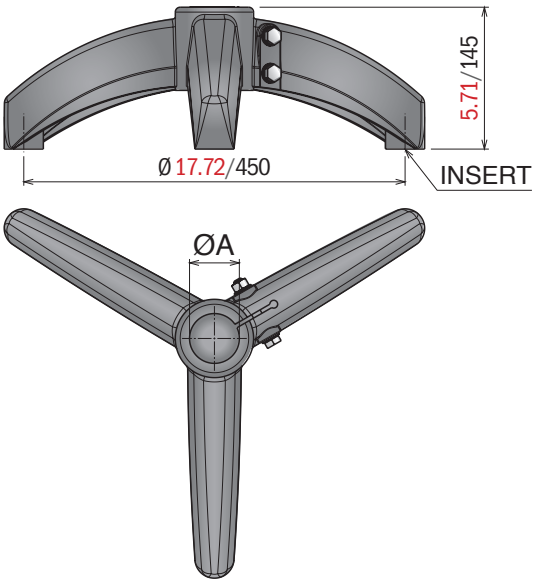

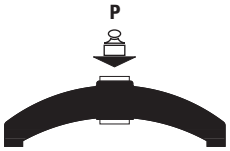

Tube sliding load resistance
P=L1750 lbF/8000N
Max applicable load
P=2250 lbF/10000N
Bolts tightening torque
18,50 lbF.ft/25 N.m

Material:
Side bracket: Polyamide
Screws and washers: Stainless steel
Nuts: nickel plated brass

407 *Side mounting top bracket*

Max recommended tightening torque 2 kg/m

Part	Article-Nr.	ØA in-mm
407	40701	1.90/48,3
407	40702	2.00/50,9

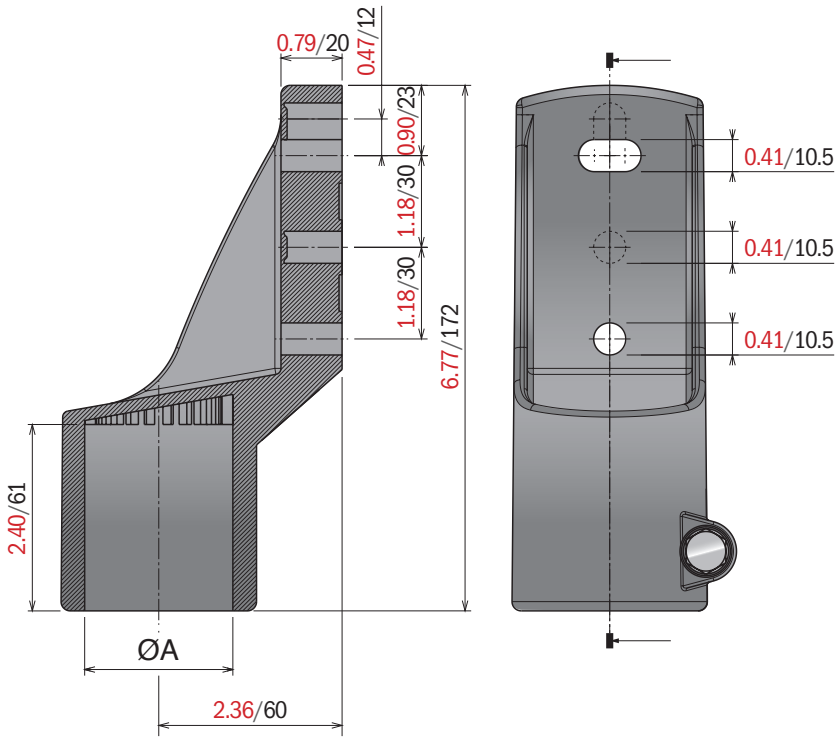

408 *Side mounting top bracket*

Max recommended tightening torque 2,5 kg/m

Part	Article-Nr.	
408	40801	

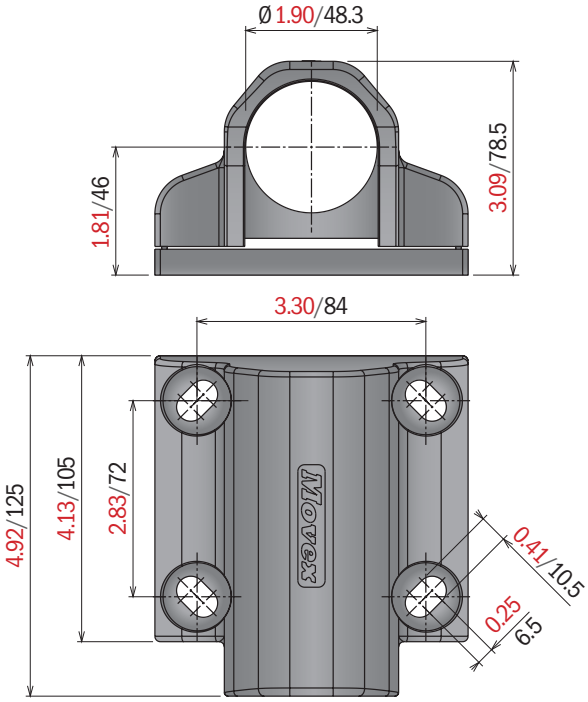

Material:
Support head: Stainless steel
Screws and washers: Stainless steel

409 Side mounting top bracket

Part	Article-Nr.	ØA in-mm
409	40901	1.90/48,3

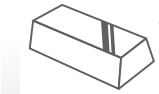

Stainless steel AISI 304

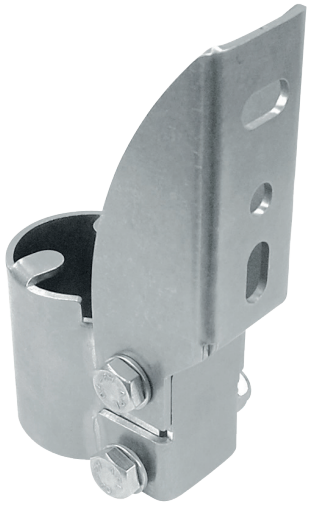

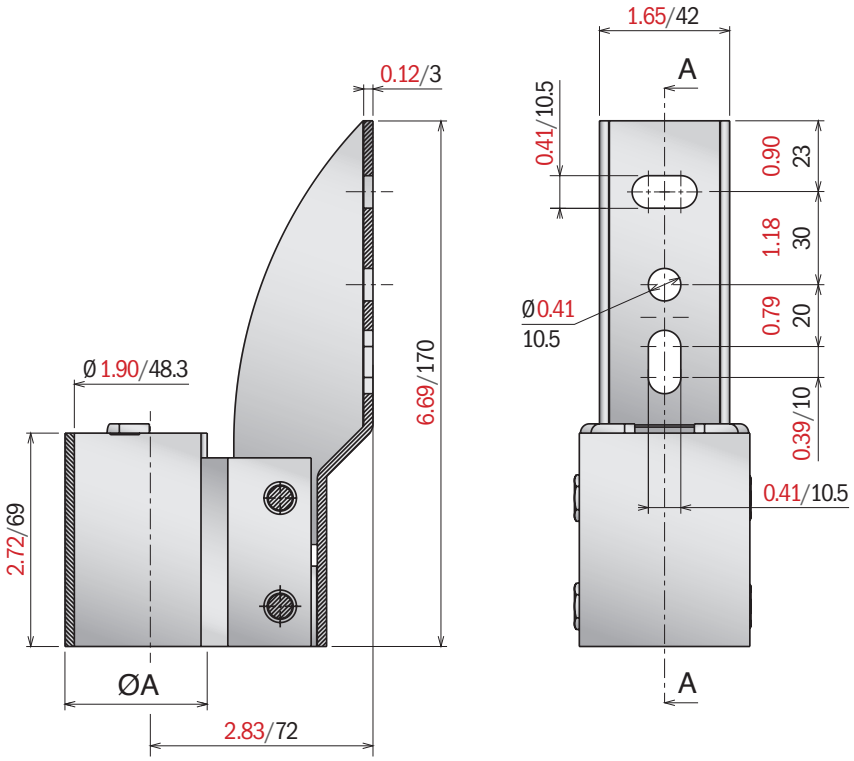

Material:
Support head: Polyamide
Screws and washers and nut:
Stainless steel

410 Support head

Max recommended tightening torque 3,5 kg/m

Part	Article-Nr.	ØA in-mm
410	41001	1.90/48,3
410	41002	2.375/60,3

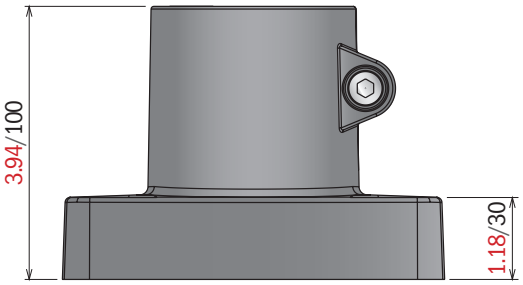

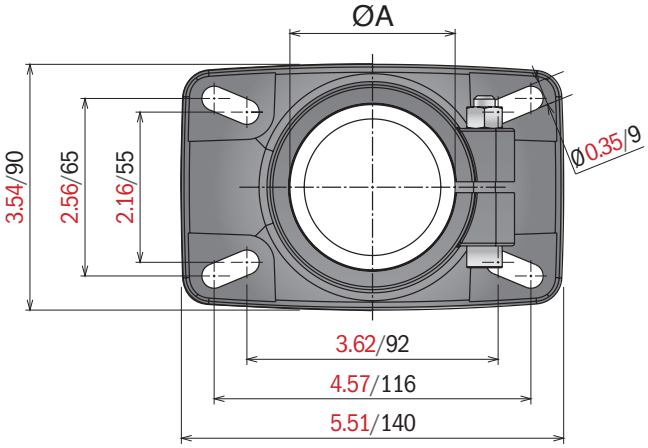

411 Support head

Max recommended tightening torque 1,5 kg/m

Part	Article-Nr.	ØA in-mm
411	41101	1.90/48,3
411	41102	2.00/50,9

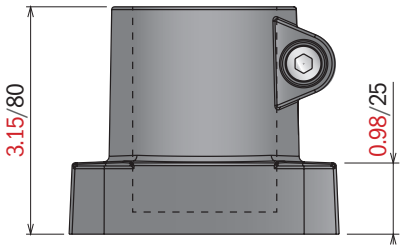

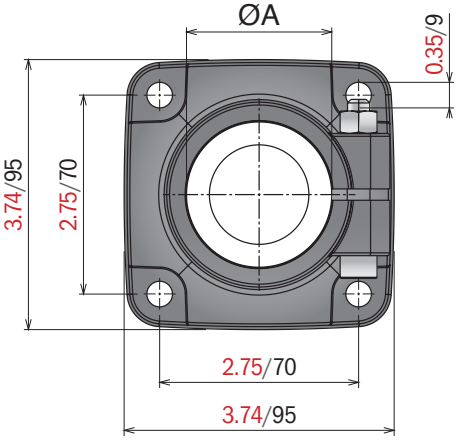

426 Support head

Part	Article-Nr.
426	42601

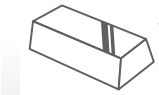

Stainless steel AISI 304

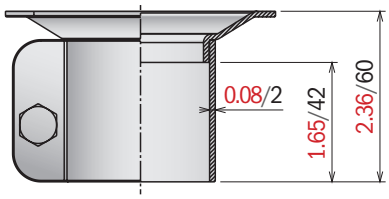

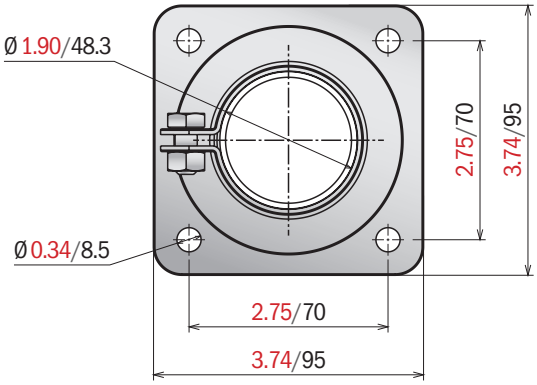

Material::
Stainless steel

427 Side bracket

Part	Article-Nr.	ØA in-mm
427	42701	5/8/16
427	42702	3/4/20

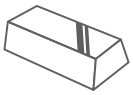

Stainless steel AISI 304

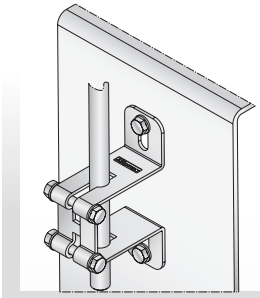

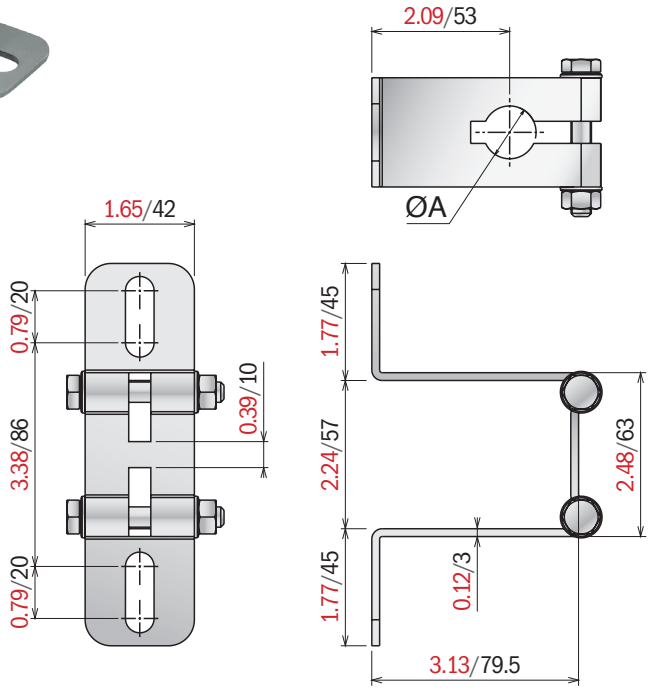

425 Clamp collar

Part	Article-Nr.	A in-mm	ØB in-mm
425	42511	1.00/25,4	2.00/50,8
425	42521	3.00/76,2	2.00/50,8

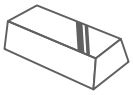

Stainless steel AISI 304

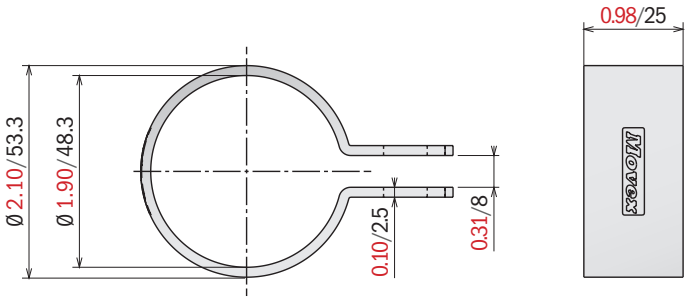

Material:
Joint: Polyamide
Screws and washers: Stainless steel
Inserts nuts: nickel plated brass

413 *Connecting joint*

Max recommended tightening torque 1,5 kg/m

Part	Article-Nr.	ØA in-mm	ØB in-mm	C in-mm	D in-mm	E in-mm
413	41301	1.90/48,3	1.90/48,3	5.27/134	3.38/86	2.68/68
413	41302	2.375/60,3	1.90/48,3	5.75/146	3.86/98	3.15/80
413	41303	2.375/60,3	2.375/60,3	5.75/146	3.86/98	3.15/80

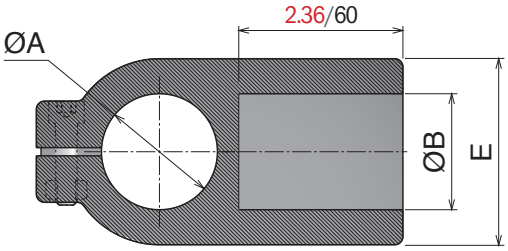

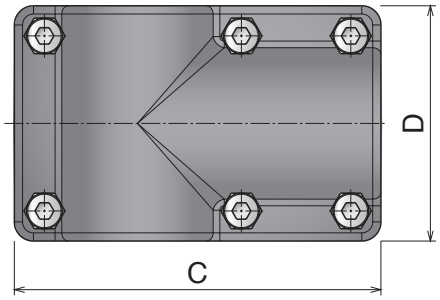

417 *Connecting joint*

Part	Article-Nr.	ØA in-mm
417	41701	1.90/48,3
417	41702	2.0/50,9

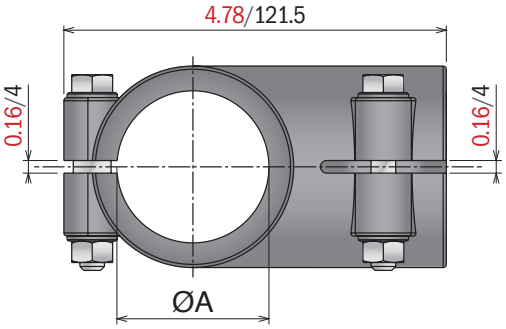

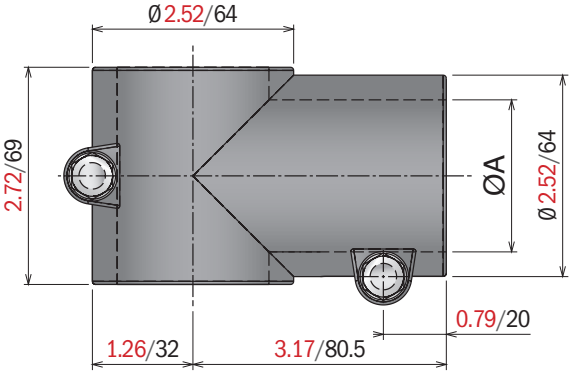

Material::
Stainless steel

414 Connecting joint (SS)

Part	Article-Nr.	ØA in-mm	ØB in-mm	C	D	E
414	41401	1.90/48,3	1.90/48,3	3.94/100	5.12/130	2.85/72,5
414	41402	2.375/60,3	2.375/60,3	4.33/110	5.12/150	3.64/92,5

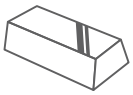

Stainless steel AISI 304

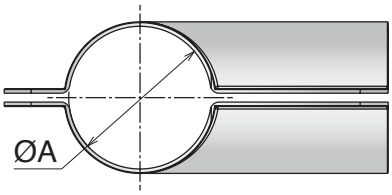

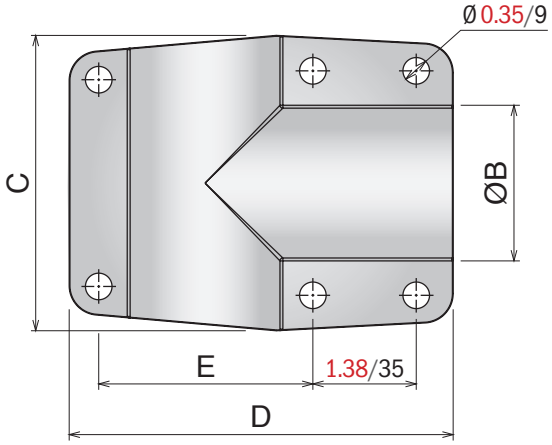

Material:
Plug: Polyamide
Inserts: PA or nickel plated brass

419 Expansions plugs

Part	Article-Nr. Brass Bush	Article-Nr. PA Bush	ØA in-mm	B in-mm	C in-mm	M
419	41903Y	41913Y	1.50/38,1	1.575/40	0.20/5	5/16-18
419	41904Y	41914Y	1.50/38,1	1.575/40	0.20/5	3/8-16
419	41905Y	41915Y	1.66/42,4	1.575/40	0.20/5	5/16-18
419	41906Y	41916Y	1.66/42,4	1.575/40	0.20/5	3/8-16

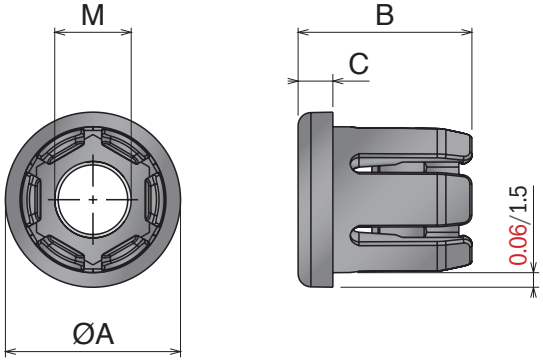

Material:
Plug: Polyamide
Inserts: PA or nickel plated brass

415 Threaded bushings for round tubes

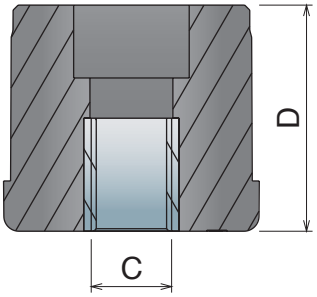

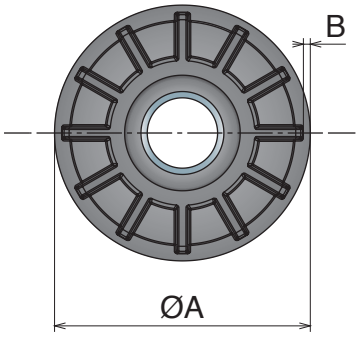

Part	Article-Nr.	ØA in-mm	B in-mm	C	D in-mm	Static load lbs-kg
415	41523Y	1.50/38,1	0.065/1,5	3/8-16	1.57/40	1000/450
415	41524Y			1/2-13	1.57/40	
415	41526Y			5/8-11	1.57/40	
415	41535Y	1.66/42,4	0.065/1,5	3/8-16	1.69/43	1000/450
415	41536Y			1/2-13	1.69/43	
415	41538Y			5/8-11	1.69/43	
415	41550Y	1.90/48,3	0.065/1,5	3/8-16	1.89/48	1000/450
415	41551Y			1/2-13	1.89/48	
415	41501Y			5/8-11	1.89/48	
415	41502Y			3/4-10	1.89/48	
415	41558Y	1.90/48,3	0.109/2,5	3/8-16	1.89/48	1000/450
415	41559Y			1/2-13	1.89/48	
415	41561Y			5/8-11	1.89/48	
415	41562Y			3/4-10	1.89/48	1800/800
415	41566Y	2.00/50,9	0.065/1,5	3/8-16	1.97/50	1000/450
415	41567Y			1/2-13	1.97/50	
415	41569Y			5/8-11	1.97/50	
415	41570Y			3/4-10	1.97/50	1800/800
415	41505Y	2.38/60,3	0.08/2	5/8-11	2.16/55	1400/640
415	41592Y	2.38/60,3	0.109/2,5	5/8-11	2.16/55	1800/800

Material:
Plug: Polyamide
Inserts: PA or nickel plated brass

416 Threaded bushings for square tubes

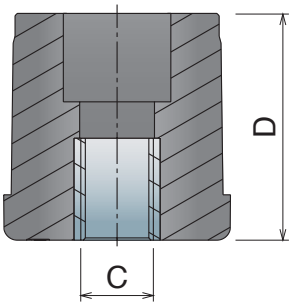

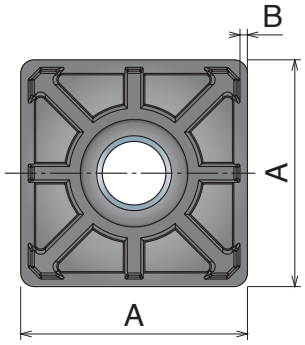

Part	Article-Nr.	ØA in-mm	B in-mm	C	D in-mm	Static load lbs-kg
416	41601Y	1.00/25	0.065/1,5	3/8-16	1.18/30	1000/450
416	41602Y			1/2-13	1.18/30	
416	41611Y	1.18/30	0.065/1,5	3/8-16	1.30/33	1000/450
416	41681Y	1.50/38,1	0.065/1,6	3/8-16	1.69/43	1000/450
416	41682Y			1/2-13	1.69/43	
416	41684Y			5/8-11	1.69/43	
416	41685Y			3/4-10	1.69/43	
416	41686Y	1.50/38,1	0.12/3	3/8-16	1.69/43	1000/450
416	41687Y			1/2-13	1.69/43	
416	41689Y			5/8-11	1.69/43	
416	41690Y			3/4-10	1.69/43	
416	41653Y	2.00/50	0.065/1,5	3/8-16	1.97/50	1000/450
416	41654Y			1/2-13	1.97/50	
416	41656Y			5/8-11	1.97/50	
416	41657Y			3/4-10	1.97/50	1800/800
416	41561Y	2.00/50	0.109/2,5	5/8-11	1.97/50	1000/450
416	41662Y			1/2-13	1.97/50	
416	41664Y			5/8-11	1.97/50	
416	41665Y			3/4-10	1.97/50	1800/800
416	41674Y	2.38/60,3	0.08/2	5/8-11	2.16/55	1300/590

Material:
Plug: Stainless steel

428 Threaded bushings for square tube

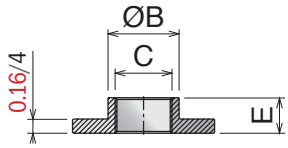

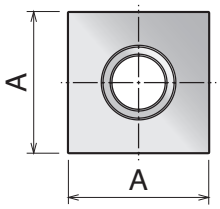

Part	Article-Nr.	A in-mm	C in-mm	ØB in-mm	E in-mm
428	42801Y	1.50/40	5/8-11	0.79/20	0.39/10
428	42802Y	1.50/40	3/4-10	0.90/23	0.43/11
428	42805Y	1.95/45	5/8-11	0.79/20	0.39/10
428	42806Y	1.95/45	3/4-10	0.90/23	0.43/11
428	42899Y	1.95/45	1/8	1.18/30	0.45/11,5
428	42807Y	2.38/60	5/8-11	0.79/20	0.39/10
428	42808Y	2.38/60	3/4-10	0.90/23	0.43/11

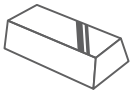

Stainless steel AISI 304

429 Threaded bushings for round tube

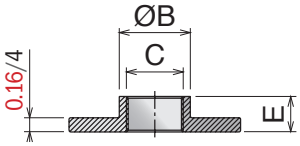

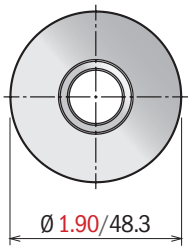

Part	Article-Nr.	C	ØB in-mm	E in-mm
429	42901Y	5/8-11	0.79/20	0.39/10
429	42902Y	3/4-10	0.90/23	0.43/11

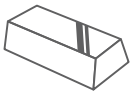

Stainless steel AISI 304

430 Threaded bushings for rectangular tube

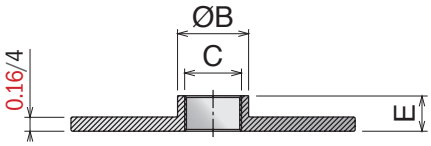

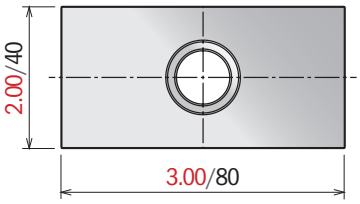

Part	Article-Nr.	C	ØB in-mm	E in-mm
430	43001Y	5/8-11	0.79/20	0.39/10
430	43002Y	3/4-10	0.90/23	0.43/11

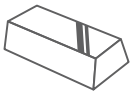

Stainless steel AISI 304

319

Bearings supports

UCFL Series

Pag 320

Pag 323

UCF Series

Pag 326

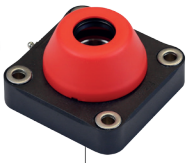

Pag 329

UCFA Series

Pag 332

UCFA Series

Pag 334

UCF-H / UCFL-H Series

Pag 336

CL / CS Series

Pag 338

FL / F / FB Series

Pag 340

UCFL

Metric size available

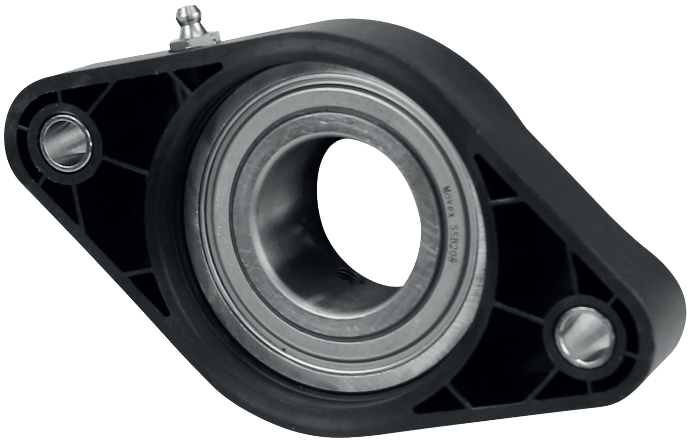

Components

- *Housing in reinforced polyamide, with higher load capacity and good resistance to corrosive chemicals such as water, oils, petrol and alcoholic beverages. All our bearings can be used at temperatures between 0°C and +80°C.*
- *Ball bearings are made in chrome steel.*

They are also available, upon request , in stainless steel. Max misalignment between shaft and housing: 2.5°.

- *Grease nipple are made in nickel plated steel, but they can also be made in stainless steel on the stainless steel bearing.*
- *Spacers from nickel plated brass to reinforce fixing holes.*
- *Washer stainless steel.*

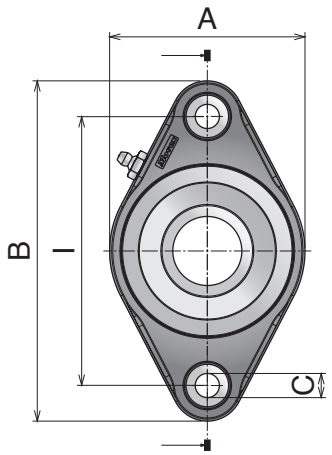

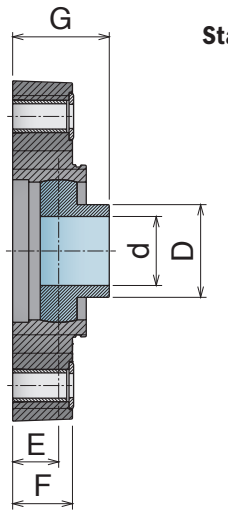

Standard

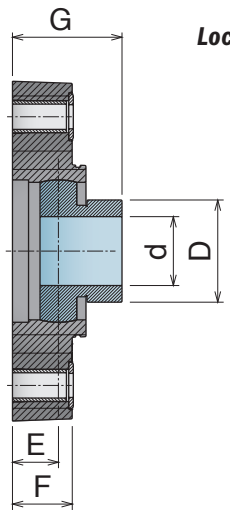

Locking collar

Safety Cap

Standard insert

	Part	Article-Nr.	Series	d	l	A	B	C	D	E	F	G	Article-Nr.
Chrome Steel	801	80110Q	UCFL 204	3/4	3.54	2.44	4.57	0.43	1.14	0.63	0.79	1.34	89004
	801	80100Q	UCFL 204	3/4	3.54	2.79	5.12	0.43	1.14	0.69	0.88	1.32	89001
	801	80121Q	UCFL 205/90	1	3.54	3.35	4.57	0.43	1.34	0.57	0.79	1.34	89005
	801	80101Q	UCFL 205/90	1	3.54	2.79	5.12	0.43	1.34	0.66	0.88	1.43	89001
	801	80111Q	UCFL 205	1	3.90	2.79	5.12	0.43	1.34	0.66	0.88	1.43	89001
	801	80122Q	UCFL 206/90	1.1/4	3.54	3.35	4.57	0.43	1.59	0.57	0.79	1.44	89005
	801	80132Q	UCFL 206/99	1.1/4	3.90	3.35	5.12	0.43	1.59	0.79	1.02	1.65	89002
	801	80102Q	UCFL 206/99	1.1/4	3.90	3.35	5.83	0.43	1.59	0.79	1.02	1.65	89002
	801	80112Q	UCFL 206	1.1/4	4.61	3.35	5.83	0.43	1.59	0.79	1.02	1.65	89002
	801	80103Q	UCFL 207/117	1.7/16	4.61	3.66	5.83	0.43	1.89	0.77	1.02	1.69	89003
	801	80113Q	UCFL 207	1.7/16	5.12	3.66	6.38	0.43	1.89	0.77	1.02	1.69	89003
	801	80104Q	UCFL 208/117	1.1/2	4.61	3.66	5.83	0.43	2.09	0.75	1.02	1.73	89003
	801	80114Q	UCFL 208	1.1/2	5.12	3.66	6.38	0.43	2.09	0.75	1.02	1.73	89003

Standard insert

	Part	Article-Nr.	Series	d	l	A	B	C	D	E	F	G	Article-Nr.
Stainless Steel	801	80110SSQ	UCFL 204	3/4	3.54	2.44	4.57	0.43	1.14	0.63	0.79	1.34	89004
	801	80100SSQ	UCFL 204	3/4	3.54	2.79	5.12	0.43	1.14	0.69	0.88	1.32	89001
	801	80121SSQ	UCFL 205/90	1	3.54	3.35	4.57	0.43	1.34	0.57	0.79	1.34	89005
	801	80101SSQ	UCFL 205/90	1	3.54	2.79	5.12	0.43	1.34	0.66	0.88	1.43	89001
	801	80111SSQ	UCFL 205	1	3.90	2.79	5.12	0.43	1.34	0.66	0.88	1.43	89001
	801	80122SSQ	UCFL 206/90	1.1/4	3.54	3.35	4.57	0.43	1.59	0.57	0.79	1.44	89005
	801	80132SSQ	UCFL 206/99	1.1/4	3.90	3.35	5.12	0.43	1.59	0.79	1.02	1.65	89002
	801	80102SSQ	UCFL 206/99	1.1/4	3.90	3.35	5.83	0.43	1.59	0.79	1.02	1.65	89002
	801	80112SSQ	UCFL 206	1.1/4	4.61	3.35	5.83	0.43	1.59	0.79	1.02	1.65	89002
	801	80103SSQ	UCFL 207/117	1.7/16	4.61	3.66	5.83	0.43	1.89	0.77	1.02	1.69	89003
	801	80113SSQ	UCFL 207	1.7/16	5.12	3.66	6.38	0.43	1.89	0.77	1.02	1.69	89003
	801	80104SSQ	UCFL 208/117	1.1/2	4.61	3.66	5.83	0.43	2.09	0.75	1.02	1.73	89003
	801	80114SSQ	UCFL 208	1.1/2	5.12	3.66	6.38	0.43	2.09	0.75	1.02	1.73	89003

Insert with locking collar

	Part	Article-Nr.	Series	d	l	A	B	C	D	E	F	G	Article-Nr.
Chrome Steel	802	80210Q	UCFL 204	3/4	3.54	2.44	4.57	0.43	1.31	0.63	0.79	1.57	89004
	802	80200Q	UCFL 204	3/4	3.54	2.79	5.12	0.43	1.31	0.69	0.88	1.63	89001
	802	80221Q	UCFL 205/90	1	3.54	3.35	4.57	0.43	1.50	0.57	0.79	1.49	89005
	802	80201Q	UCFL 205/90	1	3.54	2.79	5.12	0.43	1.50	0.66	0.88	1.58	89001
	802	80211Q	UCFL 205	1	3.90	2.79	5.12	0.43	1.50	0.66	0.88	1.58	89001
	802	80222Q	UCFL 206/90	1.1/4	3.54	3.35	4.57	0.43	1.75	0.57	0.79	1.66	89005
	802	80232Q	UCFL 206/99	1.1/4	3.90	3.35	5.12	0.43	1.75	0.79	1.02	1.88	89002
	802	80202Q	UCFL 206/99	1.1/4	3.90	3.35	5.83	0.43	1.75	0.79	1.02	1.88	89002
	802	80212Q	UCFL 206	1.1/4	4.61	3.35	5.83	0.43	1.75	0.79	1.02	1.88	89002
	802	80203Q	UCFL 207/117	1.7/16	4.61	3.66	5.83	0.43	2.19	0.77	1.02	1.96	89003
	802	80213Q	UCFL 207	1.7/16	5.12	3.66	6.38	0.43	2.19	0.77	1.02	1.96	89003
	802	80204Q	UCFL 208/117	1.1/2	4.61	3.66	5.83	0.43	2.37	0.75	1.02	2.11	89003
	802	80214Q	UCFL 208	1.1/2	5.12	3.66	6.38	0.43	2.37	0.75	1.02	2.11	89003

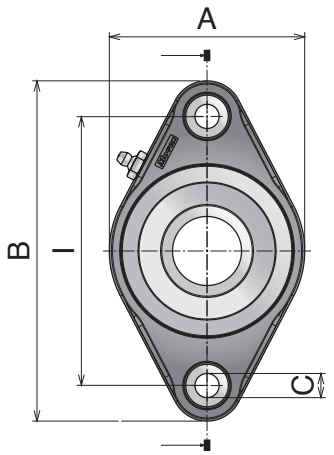

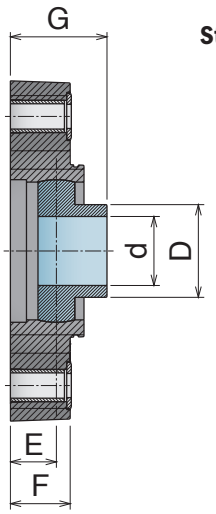

Standard

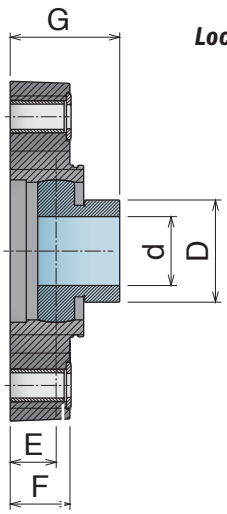

Locking collar

Safety Cap

Standard insert

	Part	Article-Nr.	Series	d	l	A	B	C	D	E	F	G	Article-Nr.
Chrome Steel	822	82205Q	UCFL 204/76,5	3/4	3.01	2.20	3.94	0.43	1.14	0.61	0.47	1.32	89007
	822	82210Q	UCFL 204	3/4	3.54	2.44	4.57	0.43	1.14	0.63	0.79	1.34	89004
	822	82201Q	UCFL 205/90	1	3.54	2.79	5.12	0.43	1.34	0.66	0.88	1.43	89001
	822	82211Q	UCFL 205	1	3.90	2.79	5.12	0.43	1.34	0.66	0.88	1.43	89001
	822	82222Q	UCFL 206/90	1.1/4	3.54	3.35	4.57	0.43	1.59	0.57	0.79	1.44	89005
	822	82212Q	UCFL 206	1.1/4	4.61	3.35	5.83	0.43	1.59	0.79	1.02	1.65	89002
	822	82203Q	UCFL 207/117	1.7/16	4.61	3.66	5.83	0.43	1.89	0.77	1.02	1.69	89003
	822	82213Q	UCFL 207	1.7/16	5.12	3.66	6.38	0.43	1.89	0.77	1.02	1.69	89003
	822	82204Q	UCFL 208/117	1.1/2	4.81	3.66	5.83	0.43	2.09	0.75	1.02	1.73	89003

Standard insert

	Part	Article-Nr.	Series	d	l	A	B	C	D	E	F	G	Article-Nr.
Stainless Steel	822	82205SSQ	UCFL 204/76,5	3/4	3.01	2.20	3.94	0.43	1.14	0.61	0.47	1.32	89007
	822	82210SSQ	UCFL 204	3/4	3.54	2.44	4.57	0.43	1.14	0.63	0.79	1.34	89004
	822	82201SSQ	UCFL 205/90	1	3.54	2.79	5.12	0.43	1.34	0.66	0.88	1.43	89001
	822	82211SSQ	UCFL 205	1	3.90	2.79	5.12	0.43	1.34	0.66	0.88	1.43	89001
	822	82222SSQ	UCFL 206/90	1.1/4	3.54	3.35	4.57	0.43	1.59	0.57	0.79	1.44	89005
	822	82212SSQ	UCFL 206	1.1/4	4.61	3.35	5.83	0.43	1.59	0.79	1.02	1.65	89002
	822	82203SSQ	UCFL 207/117	1.7/16	4.61	3.66	5.83	0.43	1.89	0.77	1.02	1.69	89003
	822	82213SSQ	UCFL 207	1.7/16	5.12	3.66	6.38	0.43	1.89	0.77	1.02	1.69	89003
	822	82204SSQ	UCFL 208/117	1.1/2	4.81	3.66	5.83	0.43	2.09	0.75	1.02	1.73	89003

Insert with locking collar

	Part	Article-Nr.	Series	d	l	A	B	C	D	E	F	G	Article-Nr.
Chrome Steel	823	82305Q	UCFL 204/76,5	3/4	3.01	2.20	3.94	0.43	1.31	0.61	0.47	1.32	89007
	823	82310Q	UCFL 204	3/4	3.54	2.44	4.57	0.43	1.31	0.63	0.79	1.57	89004
	823	82301Q	UCFL 205/90	1	3.54	2.79	5.12	0.43	1.50	0.66	0.88	1.43	89001
	823	82311Q	UCFL 205	1	3.90	2.79	5.12	0.43	1.50	0.66	0.88	1.58	89001
	823	82322Q	UCFL 206/90	1.1/4	3.54	3.35	4.57	0.43	1.75	0.57	0.79	1.44	89005
	823	82312Q	UCFL 206	1.1/4	4.61	3.35	5.83	0.43	1.75	0.79	1.02	1.88	89002
	823	82303Q	UCFL 207/117	1.7/16	4.61	3.66	5.83	0.43	2.19	0.77	1.02	1.69	89003
	823	82313Q	UCFL 207	1.7/16	5.12	3.66	6.38	0.43	2.19	0.77	1.02	1.96	89003
	823	82304Q	UCFL 208/117	1.1/2	4.81	3.66	5.83	0.43	2.37	0.75	1.02	2.11	89003

Solid Housing

UCFL

Metric size available

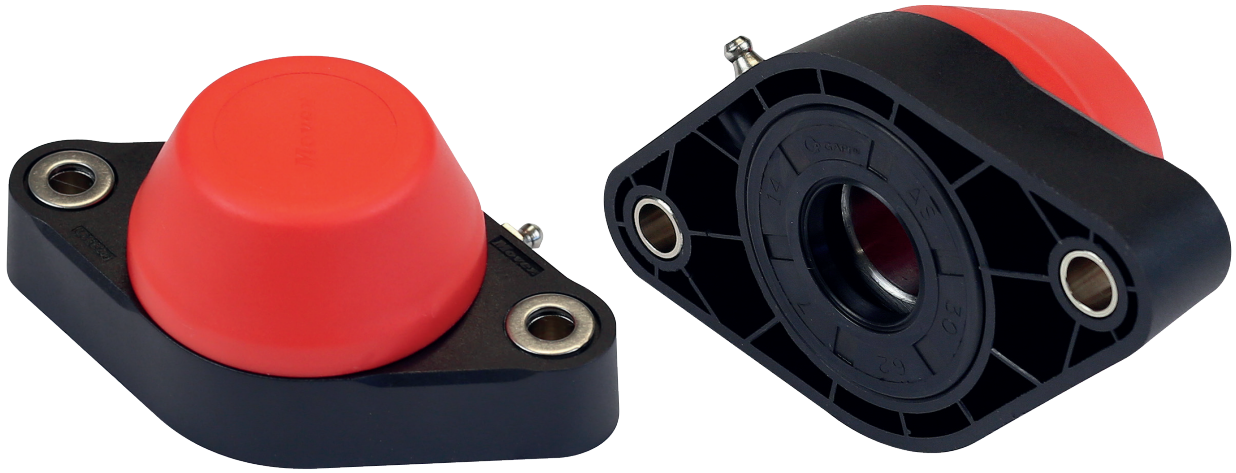

Components

- *Housing in reinforced polyamide, with higher load capacity and good resistance to corrosive chemicals such as water, oils, petrol and alcoholic beverages. All our bearings can be used at temperatures between 0°C and +80°C.*
- *Ball bearings are made in chrome steel. They are also available, upon request, in stainless steel.*

Max misalignment between shaft and housing: 2.5°.

- *Grease nipple are made in nickel plated steel, but they can also be made in stainless steel on the stainless steel bearing.*
- *Spacers from nickel plated brass to reinforce fixing holes.*
- *Washer stainless steel.*
- *Clip-on safety cap in PP.*
- *Rotary shaft seal ring in NBR rubber.*
- *O-ring in NBR rubber.*

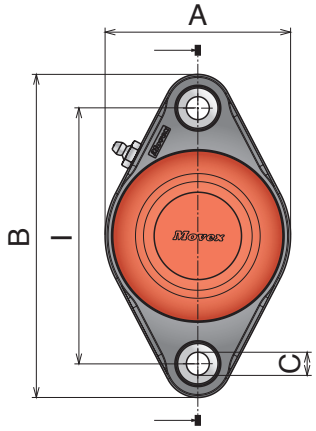

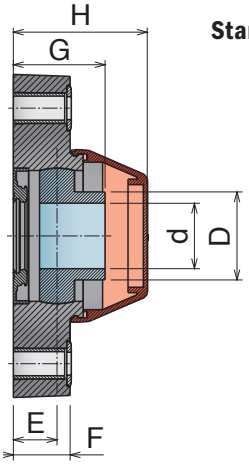

Standard

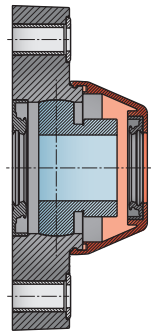

Locking collar

Standard insert, sealed, open and close version

Chrome Steel

Part	Art-close	Part	Art-open	Series	d	I	A	B	C	D	E	F	G	H
803	80310Q	804	80410Q	UCFL 204	3/4	3.54	2.44	4.57	0.43	1.14	0.63	0.79	1.34	2.03
803	80300Q	804	80400Q	UCFL 204	3/4	3.54	2.79	5.12	0.43	1.14	0.69	0.88	1.32	2.05
803	80321Q	804	80421Q	UCFL 205/90	1	3.54	3.35	4.57	0.43	1.34	0.57	0.79	1.34	2.18
803	80301Q	804	80401Q	UCFL 205/90	1	3.54	2.79	5.12	0.43	1.34	0.66	0.88	1.43	2.05
803	80311Q	804	80411Q	UCFL 205	1	3.90	2.79	5.12	0.43	1.34	0.66	0.88	1.43	2.05
803	80322Q	804	80422Q	UCFL 206/90	1.1/4	3.54	3.35	4.57	0.43	1.59	0.57	0.79	1.44	2.18
803	80332Q	804	80432Q	UCFL 206/99	1.1/4	3.90	3.35	5.12	0.43	1.59	0.79	1.02	1.65	2.42
803	80302Q	804	80402Q	UCFL 206/99	1.1/4	3.90	3.35	5.83	0.43	1.59	0.79	1.02	1.65	2.42
803	80312Q	804	80412Q	UCFL 206	1.1/4	4.61	3.35	5.83	0.43	1.59	0.79	1.02	1.65	2.42
803	80303Q	804	80403Q	UCFL 207/117	1.7/16	4.61	3.66	5.83	0.43	1.89	0.77	1.02	1.69	2.62
803	80313Q	804	80413Q	UCFL 207	1.7/16	5.12	3.66	6.83	0.43	1.89	0.77	1.02	1.69	2.62
803	80304Q	804	80404Q	UCFL 208/117	1.1/2	4.61	3.66	5.83	0.43	2.09	0.75	1.02	1.73	2.62
803	80314Q	804	80414Q	UCFL 208	1.1/2	4.61	3.66	6.83	0.43	2.09	0.75	1.02	1.73	2.62

Standard insert, sealed, open and close version

Stainless Steel

Part	Art-close	Part	Art-open	Series	d	I	A	B	C	D	E	F	G	H
803	80310SSQ	804	80410SSQ	UCFL 204	3/4	3.54	2.44	4.57	0.43	1.14	0.63	0.79	1.34	2.03
803	80300SSQ	804	80400SSQ	UCFL 204	3/4	3.54	2.79	5.12	0.43	1.14	0.69	0.88	1.32	2.05
803	80321SSQ	804	80421SSQ	UCFL 205/90	1	3.54	3.35	4.57	0.43	1.34	0.57	0.79	1.34	2.18
803	80301SSQ	804	80401SSQ	UCFL 205/90	1	3.54	2.79	5.12	0.43	1.34	0.66	0.88	1.43	2.05
803	80311SSQ	804	80411SSQ	UCFL 205	1	3.90	2.79	5.12	0.43	1.34	0.66	0.88	1.43	2.05
803	80322SSQ	804	80422SSQ	UCFL 206/90	1.1/4	3.54	3.35	4.57	0.43	1.59	0.57	0.79	1.44	2.18
803	80332SSQ	804	80432SSQ	UCFL 206/99	1.1/4	3.90	3.35	5.12	0.43	1.59	0.79	1.02	1.65	2.42
803	80302SSQ	804	80402SSQ	UCFL 206/99	1.1/4	3.90	3.35	5.83	0.43	1.59	0.79	1.02	1.65	2.42
803	80312SSQ	804	80412SSQ	UCFL 206	1.1/4	4.61	3.35	5.83	0.43	1.59	0.79	1.02	1.65	2.42
803	80303SSQ	804	80403SSQ	UCFL 207/117	1.7/16	4.61	3.66	5.83	0.43	1.89	0.77	1.02	1.69	2.62
803	80313SSQ	804	80413SSQ	UCFL 207	1.7/16	5.12	3.66	6.83	0.43	1.89	0.77	1.02	1.69	2.62
803	80304SSQ	804	80404SSQ	UCFL 208/117	1.1/2	4.61	3.66	5.83	0.43	2.09	0.75	1.02	1.73	2.62
803	80314SSQ	804	80414SSQ	UCFL 208	1.1/2	5.12	3.66	6.83	0.43	2.09	0.75	1.02	1.73	2.62

"Long life" insert, sealed, open and close version

Chrome Steel "Long life"

Part	Art-close	Part	Art-open	Series	d	I	A	B	C	D	E	F	G	H
803	80310LQ	804	80410LQ	UCFL 204	3/4	3.54	2.44	4.57	0.43	1.14	0.63	0.79	1.34	2.03
803	80300LQ	804	80400LQ	UCFL 204	3/4	3.54	2.79	5.12	0.43	1.14	0.69	0.88	1.32	2.05
803	80321LQ	804	80421LQ	UCFL 205/90	1	3.54	3.35	4.57	0.43	1.34	0.57	0.79	1.34	2.18
803	80301LQ	804	80401LQ	UCFL 205/90	1	3.54	2.79	5.12	0.43	1.34	0.66	0.88	1.43	2.05
803	80311LQ	804	80411LQ	UCFL 205	1	3.90	2.79	5.12	0.43	1.34	0.66	0.88	1.43	2.05
803	80322LQ	804	80422LQ	UCFL 206/90	1.1/4	3.54	3.35	4.57	0.43	1.59	0.57	0.79	1.44	2.18
803	80332LQ	804	80432LQ	UCFL 206/99	1.1/4	3.90	3.35	5.12	0.43	1.59	0.79	1.02	1.65	2.42
803	80302LQ	804	80402LQ	UCFL 206/99	1.1/4	3.90	3.35	5.83	0.43	1.59	0.79	1.02	1.65	2.42
803	80312LQ	804	80412LQ	UCFL 206	1.1/4	4.61	3.35	5.83	0.43	1.59	0.79	1.02	1.65	2.42
803	80303LQ	804	80403LQ	UCFL 207/117	1.7/16	4.61	3.66	5.83	0.43	1.89	0.77	1.02	1.69	2.62
803	80313LQ	804	80413LQ	UCFL 207	1.7/16	5.12	3.66	6.83	0.43	1.89	0.77	1.02	1.69	2.62
803	80304LQ	804	80404LQ	UCFL 208/117	1.1/2	4.61	3.66	5.83	0.43	2.09	0.75	1.02	1.73	2.62
803	80314LQ	804	80414LQ	UCFL 208	1.1/2	5.12	3.66	6.83	0.43	2.09	0.75	1.02	1.73	2.62

Insert with locking collar, sealed, open and close version

Chrome Steel

Part	Art-close	Part	Art-open	Series	d	I	A	B	C	D	E	F	G	H
805	80510Q	806	80610Q	UCFL 204	3/4	3.54	2.44	4.57	0.43	1.31	0.63	0.79	1.57	2.03
805	80500Q	806	80600Q	UCFL 204	3/4	3.54	2.79	5.12	0.43	1.31	0.69	0.88	1.63	2.05
805	80521Q	806	80621Q	UCFL 205/90	1	3.54	3.35	4.57	0.43	1.50	0.57	0.79	1.49	2.18
805	80501Q	806	80601Q	UCFL 205/90	1	3.54	2.79	5.12	0.43	1.50	0.66	0.88	1.58	2.05
805	80511Q	806	80611Q	UCFL 205	1	3.90	2.79	5.12	0.43	1.50	0.66	0.88	1.58	2.05
805	80522Q	806	80622Q	UCFL 206/90	1.1/4	3.54	3.35	4.57	0.43	1.75	0.57	0.79	1.66	2.18
805	80532Q	806	80632Q	UCFL 206/99	1.1/4	3.90	3.35	5.12	0.43	1.75	0.79	1.02	1.88	2.42
805	80502Q	806	80602Q	UCFL 206/99	1.1/4	3.90	3.35	5.83	0.43	1.75	0.79	1.02	1.88	2.42
805	80512Q	806	80612Q	UCFL 206	1.1/4	4.61	3.35	5.83	0.43	1.75	0.79	1.02	1.88	2.42
805	80503Q	806	80603Q	UCFL 207/117	1.7/16	4.61	3.66	5.83	0.43	2.19	0.77	1.02	1.96	2.62
805	80513Q	806	80613Q	UCFL 207	1.7/16	5.12	3.66	6.83	0.43	2.19	0.77	1.02	1.96	2.62
805	80504Q	806	80604Q	UCFL 208/117	1.1/2	4.61	3.66	5.83	0.43	2.37	0.75	1.02	2.11	2.62
805	80514Q	806	80614Q	UCFL 208	1.1/2	5.12	3.66	6.83	0.43	2.37	0.75	1.02	2.11	2.62

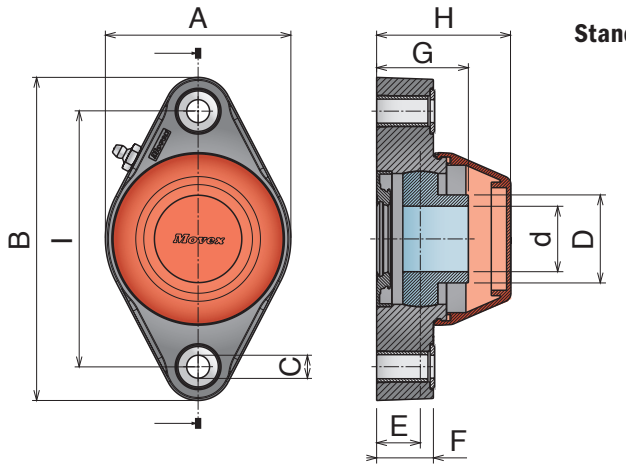

Standard

Locking collar

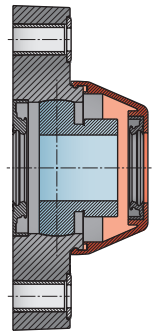

Standard insert, sealed, open and close version

Chrome Steel

Part	Art-close	Part	Art-open	Series	d	I	A	B	C	D	E	F	G	H
824	82405Q	825	82505Q	UCFL 204/76,5	3/4	3.01	2.20	3.94	0.43	1.14	0.61	0.47	1.32	1.93
824	82410Q	825	82510Q	UCFL 204	3/4	3.54	2.44	4.57	0.43	1.14	0.63	0.79	1.34	2.03
824	82401Q	825	82501Q	UCFL 205/90	1	3.54	2.79	5.12	0.43	1.34	0.66	0.88	1.43	2.05
824	82411Q	825	82511Q	UCFL 205	1	3.90	2.79	5.12	0.43	1.34	0.66	0.88	1.43	2.05
824	82422Q	825	82522Q	UCFL 206/90	1.1/4	3.54	3.35	4.57	0.43	1.59	0.57	0.79	1.44	2.18
824	82412Q	825	82512Q	UCFL 206	1.1/4	4.61	3.35	5.83	0.43	1.59	0.79	1.02	1.65	2.42
824	82403Q	825	82503Q	UCFL 207/117	1.7/16	4.61	3.66	5.83	0.43	1.89	0.77	1.02	1.96	2.62
824	82413Q	825	82513Q	UCFL 207	1.7/16	5.12	3.66	6.83	0.43	1.89	0.77	1.02	1.69	2.62
824	82404Q	825	82504Q	UCFL 208/117	1.1/2	4.81	3.66	5.83	0.43	2.09	0.75	1.02	1.73	2.62

Standard insert, sealed, open and close version

Stainless Steel

Part	Art-close	Part	Art-open	Series	d	I	A	B	C	D	E	F	G	H
824	82405SSQ	825	82505SSQ	UCFL 204/76,5	3/4	3.01	2.20	3.94	0.43	1.14	0.61	0.47	1.32	1.93
824	82410SSQ	825	82510SSQ	UCFL 204	3/4	3.54	2.44	4.57	0.43	1.14	0.63	0.79	1.34	2.03
824	82401SSQ	825	82501SSQ	UCFL 205/90	1	3.54	2.79	5.12	0.43	1.34	0.66	0.88	1.43	2.05
824	82411SSQ	825	82511SSQ	UCFL 205	1	3.90	2.79	5.12	0.43	1.34	0.66	0.88	1.43	2.05
824	82422SSQ	825	82522SSQ	UCFL 206/90	1.1/4	3.54	3.35	4.57	0.43	1.59	0.57	0.79	1.44	2.18
824	82412SSQ	825	82512SSQ	UCFL 206	1.1/4	4.61	3.35	5.83	0.43	1.59	0.79	1.02	1.65	2.42
824	82403SSQ	825	82503SSQ	UCFL 207/117	1.7/16	4.61	3.66	5.83	0.43	1.89	0.77	1.02	1.96	2.62
824	82413SSQ	825	82513SSQ	UCFL 207	1.7/16	5.12	3.66	6.83	0.43	1.89	0.77	1.02	1.69	2.62
824	82404SSQ	825	82504SSQ	UCFL 208/117	1.1/2	4.81	3.66	5.83	0.43	2.09	0.75	1.02	1.73	2.62

"Long life" insert, sealed, open and close version

"Long life"

Part	Art-close	Part	Art-open	Series	d	I	A	B	C	D	E	F	G	H
824	82405LQ	825	82505LQ	UCFL 204/76,5	3/4	3.01	2.20	3.94	0.43	1.14	0.61	0.47	1.32	1.93
824	82410LQ	825	82510LQ	UCFL 204	3/4	3.54	2.44	4.57	0.43	1.14	0.63	0.79	1.34	2.03
824	82401LQ	825	82501LQ	UCFL 205/90	1	3.54	2.79	5.12	0.43	1.34	0.66	0.88	1.43	2.05
824	82411LQ	825	82511LQ	UCFL 205	1	3.90	2.79	5.12	0.43	1.34	0.66	0.88	1.43	2.05
824	82422LQ	825	82522LQ	UCFL 206/90	1.1/4	3.54	3.35	4.57	0.43	1.59	0.57	0.79	1.44	2.18
824	82412LQ	825	82512LQ	UCFL 206	1.1/4	4.61	3.35	5.83	0.43	1.59	0.79	1.02	1.65	2.42
824	82403LQ	825	82503LQ	UCFL 207/117	1.7/16	4.61	3.66	5.83	0.43	1.89	0.77	1.02	1.96	2.62
824	82413LQ	825	82513LQ	UCFL 207	1.7/16	5.12	3.66	6.83	0.43	1.89	0.77	1.02	1.69	2.62
824	82404 LQ	825	82504LQ	UCFL 208/117	1.1/2	4.81	3.66	5.83	0.43	2.09	0.75	1.02	1.73	2.62

Insert with locking collar, sealed, open and close version

Chrome Steel

Part	Art-close	Part	Art-open	Series	d	I	A	B	C	D	E	F	G	H
826	82605Q	827	82705Q	UCFL 204/76,5	3/4	3.01	2.20	3.94	0.43	1.31	0.61	0.47	1.32	1.93
826	82610Q	827	82710Q	UCFL 204	3/4	3.54	2.44	4.57	0.43	1.31	0.63	0.79	1.57	2.03
826	82601Q	827	82701Q	UCFL 205/90	1	3.54	2.79	5.12	0.43	1.50	0.66	0.88	1.43	2.05
826	82611Q	827	82711Q	UCFL 205	1	3.90	2.79	5.12	0.43	1.50	0.66	0.88	1.58	2.05
826	82622Q	827	82722Q	UCFL 206/90	1.1/4	3.54	3.35	4.57	0.43	1.75	0.57	0.79	1.44	2.18
826	82612Q	827	82712Q	UCFL 206	1.1/4	4.61	3.35	5.83	0.43	1.75	0.79	1.02	1.88	2.42
826	82603Q	827	82703Q	UCFL 207/117	1.7/16	4.61	3.66	5.83	0.43	2.19	0.77	1.02	1.96	2.62
826	82613Q	827	82713Q	UCFL 207	1.7/16	5.12	3.66	6.83	0.43	2.19	0.77	1.02	1.96	2.62
826	82604Q	827	82704Q	UCFL 208/117	1.1/2	4.81	3.66	5.83	0.43	2.37	0.75	1.02	2.11	2.62

UCF

Metric size available

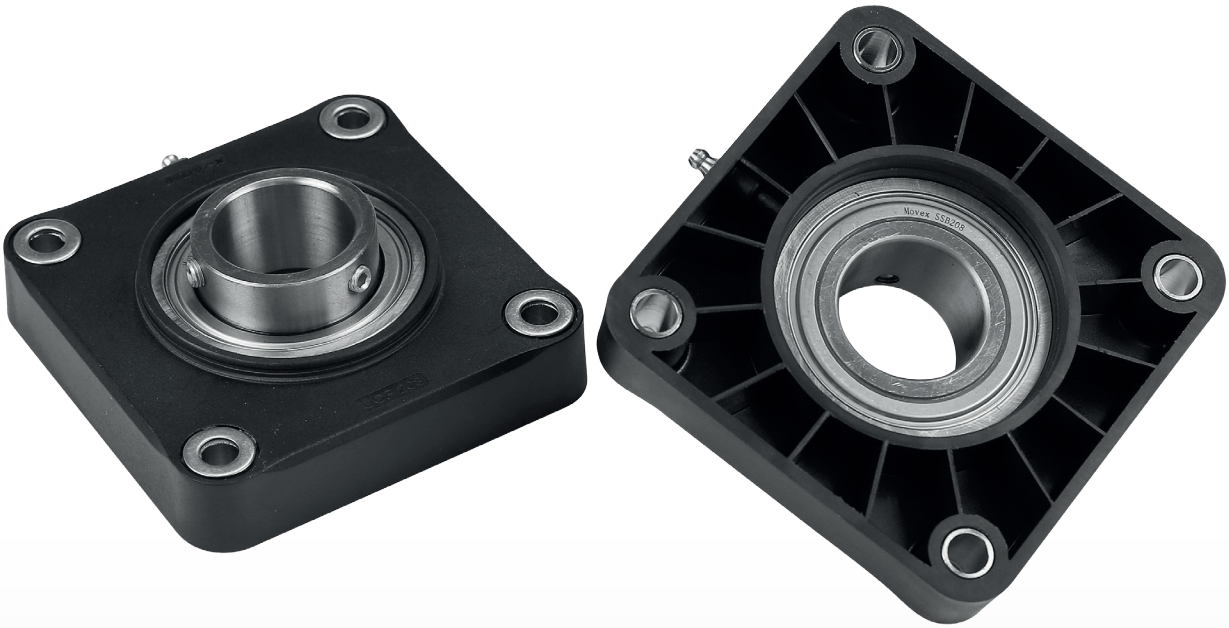

Components

- *Housing in reinforced polyamide, with higher load capacity and good resistance to corrosive chemicals such as water, oils, petrol and alcoholic beverages. All our bearings can be used at temperatures between 0°C and +80°C.*
- *Ball bearings are made in chrome steel. They are also available, upon request, in stainless steel.*

Max misalignment between shaft and housing: 2.5°.

- *Grease nipple are made in nickel plated steel, but they can also be made in stainless steel on the stainless steel bearing.*
- *Spacers from nickel plated brass to reinforce fixing holes.*
- *Washer stainless steel.*

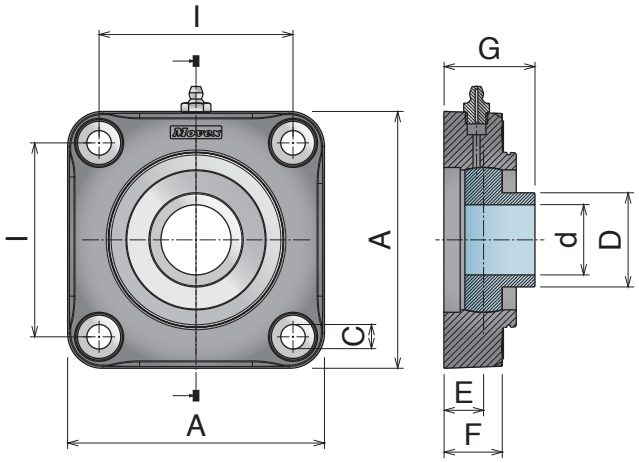

Safety Cap

Standard insert

Chrome Steel

Part	Article-Nr.	Series	d	I	A	C	D	E	F	G	Article-Nr.
807	80701Q	UCF 205	1	2.76	3.86	0.43	1.34	0.63	0.87	1.40	89001
807	80702Q	UCF 206	1.1/4	3.27	4.33	0.43	1.59	0.67	0.98	1.53	89002
807	80703Q	UCF 207/83	1.7/16	3.27	4.33	0.43	1.89	0.79	0.98	1.71	89003
807	80713Q	UCF 207	1.7/16	3.62	4.65	0.43	1.89	0.79	0.98	1.71	89003
807	80704Q	UCF 208/83	1.1/2	3.27	4.33	0.43	2.09	0.77	0.98	1.75	89003
807	80714Q	UCF 208	1.1/2	4.02	5.12	0.43	2.09	0.75	0.98	1.73	89003

Standard insert

Stainless Steel

Part	Article-Nr.	Series	d	I	A	C	D	E	F	G	Article-Nr.
807	80701SSQ	UCF 205	1	2.76	3.86	0.43	1.34	0.63	0.87	1.40	89001
807	80702SSQ	UCF 206	1.1/4	3.27	4.33	0.43	1.59	0.67	0.98	1.53	89002
807	80703SSQ	UCF 207/83	1.7/16	3.27	4.33	0.43	1.89	0.79	0.98	1.71	89003
807	80713SSQ	UCF 207	1.7/16	3.62	4.65	0.43	1.89	0.79	0.98	1.71	89003
807	80704SSQ	UCF 208/83	1.1/2	3.27	4.33	0.43	2.09	0.77	0.98	1.75	89003
807	80714SSQ	UCF 208	1.1/2	4.02	5.12	0.43	2.09	0.75	0.98	1.73	89003

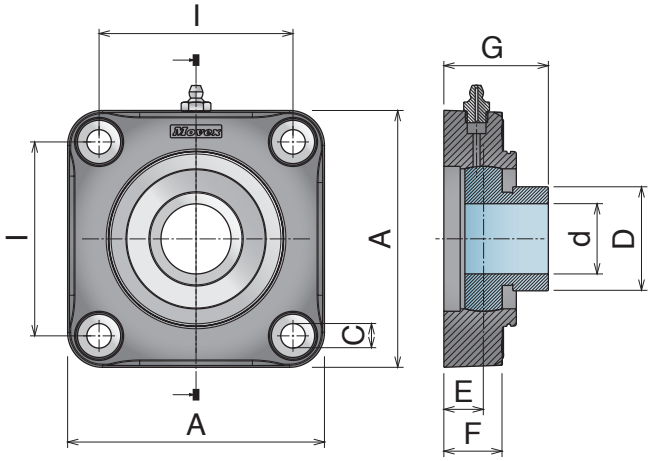

Safety Cap

Insert with locking collar

Chrome Steel

Part	Article-Nr.	Series	d	I	A	C	D	E	F	G	Article-Nr.
808	80801Q	UCF 205	1	2.76	3.86	0.43	1.50	0.63	0.87	1.55	89001
808	80802Q	UCF 206	1.1/4	3.27	4.33	0.43	1.75	0.67	0.98	1.76	89002
808	80803Q	UCF 207/83	1.7/16	3.27	4.33	0.43	2.19	0.79	0.98	1.98	89003
808	80813Q	UCF 207	1.7/16	3.62	4.65	0.43	2.19	0.79	0.98	1.98	89003
808	80804Q	UCF 208/83	1.1/2	3.27	4.33	0.43	2.37	0.77	0.98	2.13	89003
808	80814Q	UCF 208	1.1/2	4.02	5.12	0.43	2.37	0.75	0.98	2.11	89003

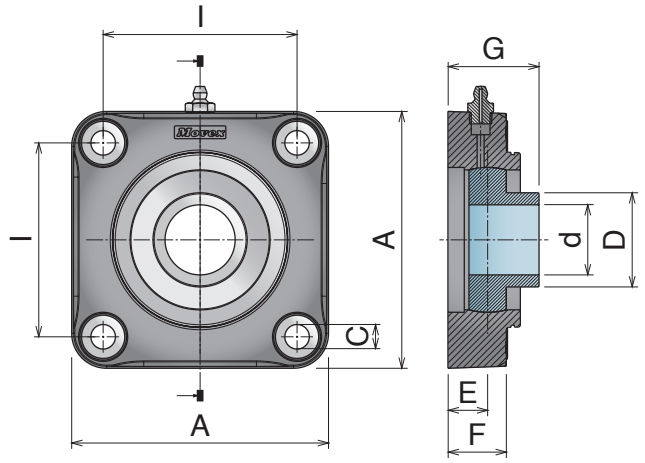

Safety Cap

Standard insert

Chrome Steel

Part	Article-Nr.	Series	d	I	A	C	D	E	F	G	Article-Nr.
828	82801Q	UCF 205	1	2.76	3.86	0.43	1.34	0.63	0.87	1.40	89001
828	82802Q	UCF 206	1.1/4	3.27	4.33	0.43	1.59	0.67	0.98	1.53	89002
828	82813Q	UCF 207	1.7/16	3.62	4.65	0.43	1.89	0.79	0.98	1.71	89003
828	82804Q	UCF 208/83	1.1/2	3.27	4.33	0.43	2.09	0.75	0.98	1.75	89003

Standard insert

Stainless Steel

Part	Article-Nr.	Series	d	I	A	C	D	E	F	G	Article-Nr.
828	82801SSQ	UCF 205	1	2.76	3.86	0.43	1.34	0.63	0.87	1.40	89001
828	82802SSQ	UCF 206	1.1/4	3.27	4.33	0.43	1.59	0.67	0.98	1.53	89002
828	82813SSQ	UCF 207	1.7/16	3.62	4.65	0.43	1.89	0.79	0.98	1.71	89003
828	82804SSQ	UCF 208/83	1.1/2	3.27	4.33	0.43	2.09	0.75	0.98	1.75	89003

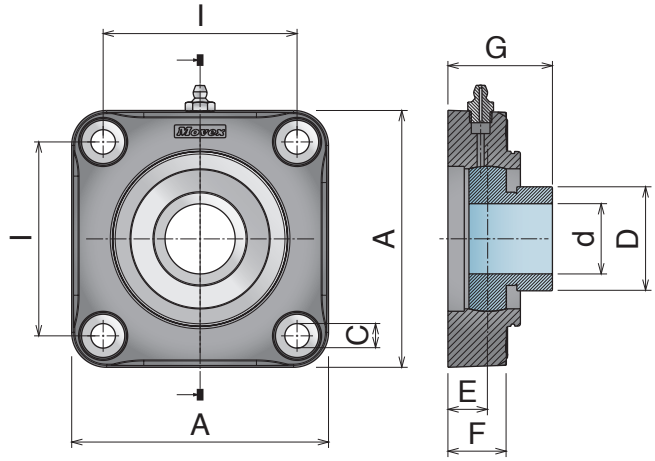

Safety Cap

Insert with locking collar

Chrome Steel

Part	Article-Nr.	Series	d	I	A	C	D	E	F	G	Article-Nr.
829	82901Q	UCF 205	1	2.76	3.86	0.43	1.50	0.63	0.87	1.55	89001
829	82902Q	UCF 206	1.1/4	3.27	4.33	0.43	1.75	0.67	0.98	1.76	89002
829	82913Q	UCF 207	1.7/16	3.62	4.65	0.43	2.19	0.79	0.98	1.98	89003
829	82904Q	UCF 208/83	1.1/2	3.27	4.33	0.43	2.37	0.75	0.98	2.13	89003

UCF

Metric size available

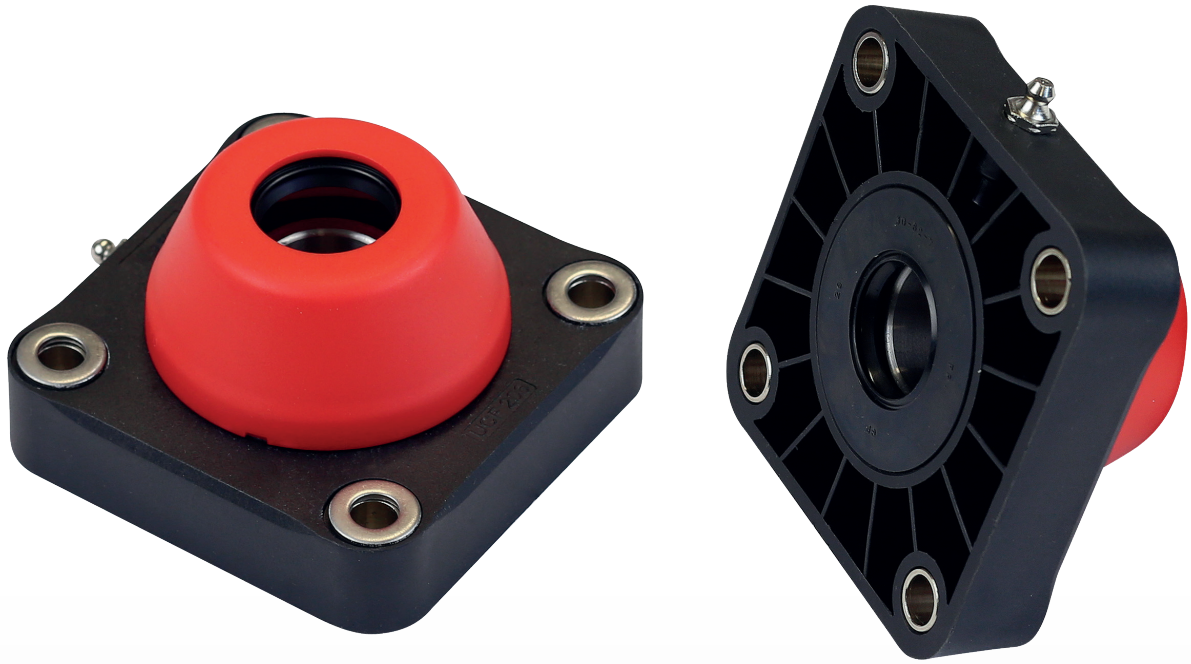

Components

- *Housing in reinforced polyamide, with higher load capacity and good resistance to corrosive chemicals such as water, oils, petrol and alcoholic beverages. All our bearings can be used at temperatures between 0°C and +80°C.*
- *Ball bearings are made in chrome steel. They are also available, upon request, in stainless steel.*

Max misalignment between shaft and housing: 2.5°.

- *Grease nipple are made in nickel plated steel, but they can also be made in stainless steel on the stainless steel bearing.*
- *Spacers from nickel plated brass to reinforce fixing holes.*
- *Washer stainless steel.*
- *Clip-on safety cap in PP.*
- *Rotary shaft seal ring in NBR rubber.*
- *O-ring in NBR rubber.*

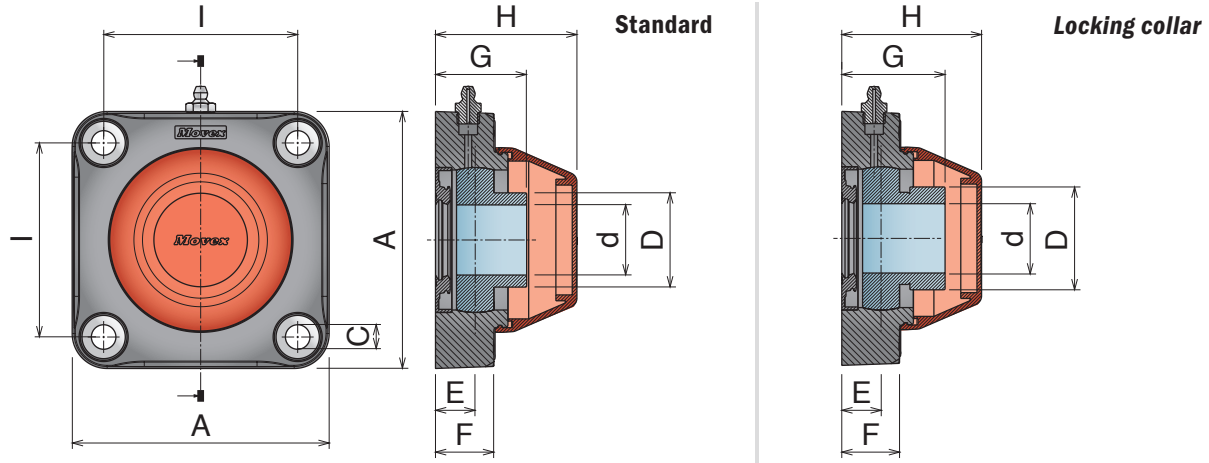

Standard insert, sealed, open and close version

Chrome Steel

Part	Art-close	Part	Art-open	Series	d	I	A	C	D	E	F	G	H
809	80901Q	810	81001Q	UCF 205	1	2.76	3.86	0.43	1.34	0.63	0.87	1.40	2.03
809	80902Q	810	81002Q	UCF 206	1.1/4	3.27	4.33	0.43	1.59	0.67	0.98	1.53	2.38
809	80903Q	810	81003Q	UCF 207/83	1.7/16	3.27	4.33	0.43	1.89	0.79	0.98	1.71	2.58
809	80913Q	810	81013Q	UCF 207	1.7/16	3.62	4.65	0.43	1.89	0.79	0.98	1.71	2.58
809	80904Q	810	81004Q	UCF 208/83	1.1/2	3.27	4.33	0.43	2.09	0.77	0.98	1.75	2.58
809	80914Q	810	81014Q	UCF 208	1.1/2	4.02	5.12	0.43	2.09	0.75	0.98	1.73	2.58

Standard insert, sealed, open and close version

Stainless Steel

Part	Art-close	Part	Art-open	Series	d	I	A	C	D	E	F	G	H
809	80901SSQ	810	81001SSQ	UCF 205	1	2.76	3.86	0.43	1.34	0.63	0.87	1.40	2.03
809	80902SSQ	810	81002SSQ	UCF 206	1.1/4	3.27	4.33	0.43	1.59	0.67	0.98	1.53	2.38
809	80903SSQ	810	81003SSQ	UCF 207/83	1.7/16	3.27	4.33	0.43	1.89	0.79	0.98	1.71	2.58
809	80913SSQ	810	81013SSQ	UCF 207	1.7/16	3.62	4.65	0.43	1.89	0.79	0.98	1.71	2.58
809	80904SSQ	810	81004SSQ	UCF 208/83	1.1/2	3.27	4.33	0.43	2.09	0.77	0.98	1.75	2.58
809	80914SSQ	810	81014SSQ	UCF 208	1.1/2	4.02	5.12	0.43	2.09	0.75	0.98	1.73	2.58

"Long life" insert, sealed, open and close version

"Long life"

Part	Art-close	Part	Art-open	Series	d	I	A	C	D	E	F	G	H
809	80901LQ	810	81001LQ	UCF 205	1	2.76	3.86	0.43	1.34	0.63	0.87	1.40	2.03
809	80902LQ	810	81002LQ	UCF 206	1.1/4	3.27	4.33	0.43	1.59	0.67	0.98	1.53	2.38
809	80903LQ	810	81003LQ	UCF 207/83	1.7/16	3.27	4.33	0.43	1.89	0.79	0.98	1.71	2.58
809	80913LQ	810	81013LQ	UCF 207	1.7/16	3.62	4.65	0.43	1.89	0.79	0.98	1.71	2.58
809	80904LQ	810	81004LQ	UCF 208/83	1.1/2	3.27	4.33	0.43	2.09	0.77	0.98	1.75	2.58
809	80914LQ	810	81014LQ	UCF 208	1.1/2	4.02	5.12	0.43	2.09	0.75	0.98	1.73	2.58

Insert with locking collar, sealed, open and close version

Chrome Steel

Part	Art-close	Part	Art-open	Series	d	I	A	C	D	E	F	G	H
811	81101Q	812	81201Q	UCF 205	1	2.76	3.86	0.43	1.50	0.63	0.87	1.55	2.03
811	81102Q	812	81202Q	UCF 206	1.1/4	3.27	4.33	0.43	1.75	0.67	0.98	1.76	2.38
811	81103Q	812	81203Q	UCF 207/83	1.7/16	3.27	4.33	0.43	2.19	0.79	0.98	1.98	2.58
811	81113Q	812	81213Q	UCF 207	1.7/16	3.62	4.65	0.43	2.19	0.79	0.98	1.98	2.58
811	81104Q	812	81204Q	UCF 208/83	1.1/2	3.27	4.33	0.43	2.37	0.77	0.98	2.13	2.58
811	81114Q	812	81214Q	UCF 208	1.1/2	4.02	5.12	0.43	2.37	0.75	0.98	2.11	2.58

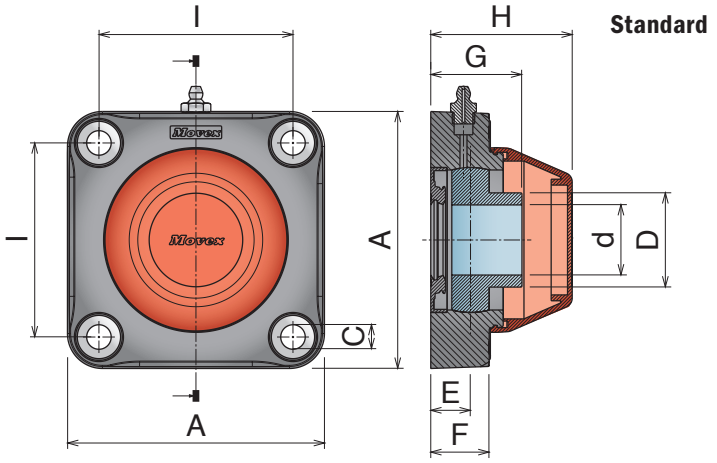

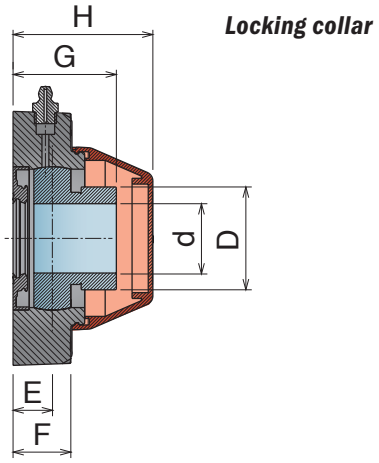

Standard insert, sealed, open and close version

Chrome Steel

Part	Art-close	Part	Art-open	Series	d	I	A	C	D	E	F	G	H
830	83001Q	831	83101Q	UCF 205	1	2.76	3.86	0.43	1.34	0.63	0.87	1.40	2.03
830	83002Q	831	83102Q	UCF 206	1.1/4	3.27	4.33	0.43	1.59	0.67	0.98	1.53	2.38
830	83013Q	831	83113Q	UCF 207	1.7/16	3.62	4.65	0.43	1.89	0.79	0.98	1.71	2.58
830	83004Q	831	83104Q	UCF 208/83	1.1/2	4.02	4.33	0.43	2.09	0.75	0.98	1.75	2.58

Standard insert, sealed, open and close version

Stainless Steel

Part	Art-close	Part	Art-open	Series	d	I	A	C	D	E	F	G	H
830	83001SSQ	831	83101SSQ	UCF 205	1	2.76	3.86	0.43	1.34	0.63	0.87	1.40	2.03
830	83002SSQ	831	83102SSQ	UCF 206	1.1/4	3.27	4.33	0.43	1.59	0.67	0.98	1.53	2.38
830	83013SSQ	831	83113SSQ	UCF 207	1.7/16	3.62	4.65	0.43	1.89	0.79	0.98	1.71	2.58
830	83004SSQ	831	83104SSQ	UCF 208/83	1.1/2	4.02	4.33	0.43	2.09	0.75	0.98	1.75	2.58

"Long life" insert, sealed, open and close version

"Long life"

Part	Art-close	Part	Art-open	Series	d	I	A	C	D	E	F	G	H
830	83001LQ	831	83101LQ	UCF 205	1	2.76	3.86	0.43	1.34	0.63	0.87	1.40	2.03
830	83002LQ	831	83102LQ	UCF 206	1.1/4	3.27	4.33	0.43	1.59	0.67	0.98	1.53	2.38
830	83013LQ	831	83113LQ	UCF 207	1.7/16	3.62	4.65	0.43	1.89	0.79	0.98	1.71	2.58
830	83004LQ	831	83104LQ	UCF 208/83	1.1/2	4.02	4.33	0.43	2.09	0.75	0.98	1.75	2.58

Insert with locking collar, sealed, open and close version

Chrome Steel

Part	Art-close	Part	Art-open	Series	d	I	A	C	D	E	F	G	H
832	83201Q	833	83301Q	UCF 205	1	2.76	3.86	0.43	1.50	0.63	0.87	1.55	2.03
832	83202Q	833	83302Q	UCF 206	1.1/4	3.27	4.33	0.43	1.75	0.67	0.98	1.76	2.38
832	83213Q	833	83313Q	UCF 207	1.7/16	3.62	4.65	0.43	2.19	0.79	0.98	1.98	2.58
832	83204Q	833	83304Q	UCF 208/83	1.1/2	4.02	4.33	0.43	2.37	0.75	0.98	2.13	2.58

UCFA

Metric size available

Solid Housing

Components

- Housing in reinforced polyamide, with higher load capacity and good resistance to corrosive chemicals such as water, oils, petrol and alcoholic beverages. All our bearings can be used at temperatures between 0°C and +80°C.
- Ball bearings are made in chrome steel. They are also available, upon request , in stainless steel.
Max misalignment between shaft and housing: 2.5°.
- Grease nipple are made in nickel plated steel, but they can also be made in stainless steel on the stainless steel bearing.
- Spacers from nickel plated brass to reinforce fixing holes.
- Washer stainless steel.

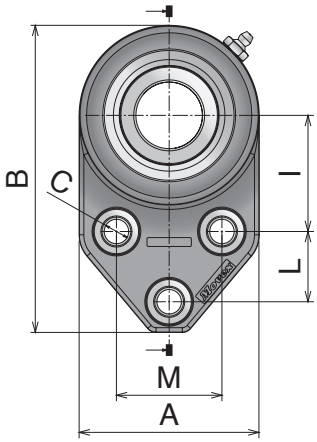

Standard

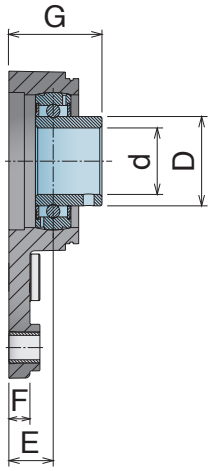

Locking collar

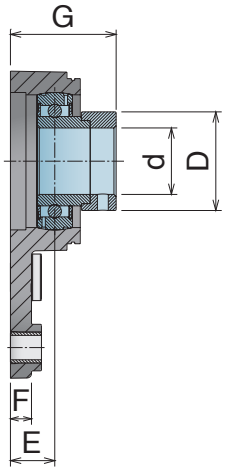

Safety Cap

Standard insert, sealed, open and close version

Chrome Steel

Part	Article-Nr.	Series	d	I	A	C	D	L	M	B	E	F	G	Article-Nr.
834	83400Q	UCFA 204	3/4	1.81	2.71	0.43	1.14	1.13	1.63	4.89	0.65	0.55	1.35	89001
834	83401Q	UCFA 205	1	1.81	2.71	0.43	1.34	1.13	1.63	4.89	0.70	0.55	1.47	89001
834	83402Q	UCFA 206	1.1/4	2.06	3.20	0.43	1.59	1.25	1.87	5.46	0.79	0.55	1.65	89002

Standard insert, sealed, open and close version

Stainless Steel

Part	Article-Nr.	Series	d	I	A	C	D	L	M	B	E	F	G	Article-Nr.
834	83400SSQ	UCFA 204	3/4	1.81	2.71	0.43	1.14	1.13	1.63	4.89	0.65	0.55	1.35	89001
834	83401SSQ	UCFA 205	1	1.81	2.71	0.43	1.34	1.13	1.63	4.89	0.70	0.55	1.47	89001
834	83402SSQ	UCFA 206	1.1/4	2.06	3.20	0.43	1.59	1.25	1.87	5.46	0.79	0.55	1.65	89002

Insert with locking collar

Chrome Steel

Part	Article-Nr.	Series	d	I	A	C	D	L	M	B	E	F	G	Article-Nr.
835	83500Q	UCFA 204	3/4	1.81	2.71	0.43	1.31	1.13	1.63	4.89	0.65	0.55	1.59	89001
835	83501Q	UCFA 205	1	1.81	2.71	0.43	1.50	1.13	1.63	4.89	0.70	0.55	1.62	89001
835	83502Q	UCFA 206	1.1/4	2.06	3.20	0.43	1.75	1.25	1.87	5.46	0.79	0.55	1.89	89002

UCFA

Metric size available

Solid Housing

Components

- *Housing in reinforced polyamide, with higher load capacity and good resistance to corrosive chemicals such as water, oils, petrol and alcoholic beverages. All our bearings can be used at temperatures between 0°C and +80°C.*
- *Ball bearings are made in chrome steel. They are also available, upon request, in stainless steel.*

Max misalignment between shaft and housing: 2.5°.

- *Grease nipple are made in nickel plated stell, but they can also be made in stainless steel on the stainless steel bearing.*
- *Spacers from nickel plated brass to reinforce fixing holes.*
- *Washer stainless steel.*
- *Clip-on safety cap in PP.*
- *Rotary shaft seal ring in NBR rubber.*
- *O-ring in NBR rubber.*

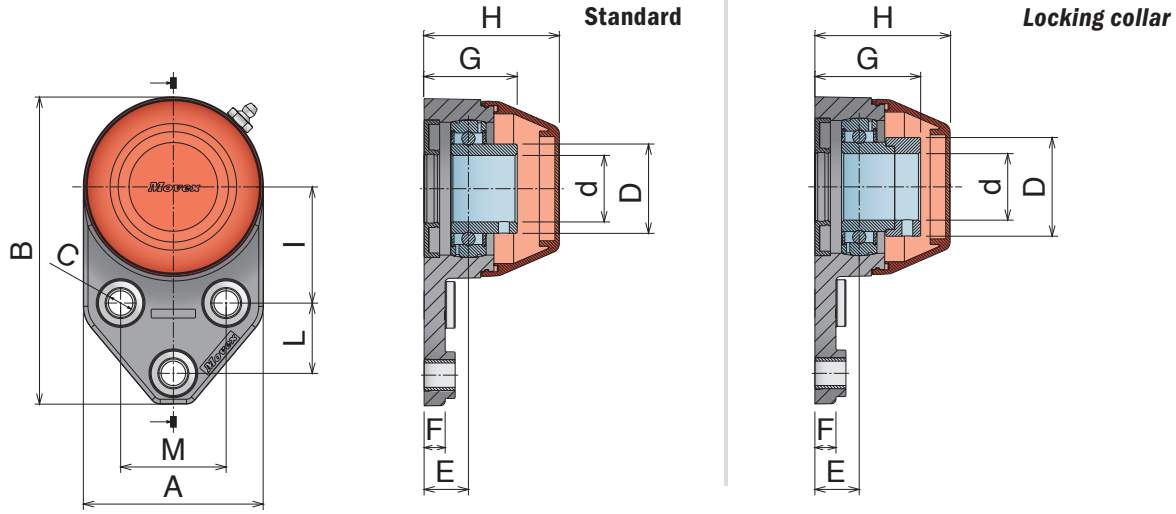

Standard insert, sealed, open and close version

Chrome Steel

Part	Art-close	Part	Art-open	Series	d	I	A	C	D	L	M	B	E	F	G	H
836	83600Q	837	83700Q	UCF 204	3/4	1.81	2.71	0.43	1.14	1.13	1.63	4.89	0.65	0.55	1.35	2.04
836	83601Q	837	83701Q	UCF 205	1	1.81	2.71	0.43	1.34	1.13	1.63	4.89	0.70	0.55	1.47	2.04
836	83602Q	837	83702Q	UCF 206	1.1/4	2.06	3.20	0.43	1.59	1.25	1.87	5.46	0.79	0.55	1.65	2.40

Standard insert, sealed, open and close version

Stainless Steel

Part	Art-close	Part	Art-open	Series	d	I	A	C	D	L	M	B	E	F	G	H
836	83600SSQ	837	83700SSQ	UCF 204	3/4	1.81	2.71	0.43	1.14	1.13	1.63	4.89	0.65	0.55	1.35	2.04
836	83601SSQ	837	83701SSQ	UCF 205	1	1.81	2.71	0.43	1.34	1.13	1.63	4.89	0.70	0.55	1.47	2.04
836	83602SSQ	837	83702SSQ	UCF 206	1.1/4	2.06	3.20	0.43	1.59	1.25	1.87	5.46	0.79	0.55	1.65	2.40

"Long life" insert, sealed, open and close version

"Long life"

Part	Art-close	Part	Art-open	Series	d	I	A	C	D	L	M	B	E	F	G	H
836	83600LQ	837	83700LQ	UCF 204	3/4	1.81	2.71	0.43	1.14	1.13	1.63	4.89	0.65	0.55	1.35	2.04
836	83601LQ	837	83701LQ	UCF 205	1	1.81	2.71	0.43	1.34	1.13	1.63	4.89	0.70	0.55	1.47	2.04
836	83602LQ	837	83702LQ	UCF 206	1.1/4	2.06	3.20	0.43	1.59	1.25	1.87	5.46	0.79	0.55	1.65	2.40

Insert with locking collar, sealed, open and close version

Chrome Steel

Part	Art-close	Part	Art-open	Series	d	I	A	C	D	L	M	B	E	F	G	H
838	83800Q	839	83900Q	UCF 204	3/4	1.81	2.71	0.43	1.31	1.13	1.63	4.89	0.65	0.55	1.35	2.04
838	83801Q	839	83901Q	UCF 205	1	1.81	2.71	0.43	1.50	1.13	1.63	4.89	0.70	0.55	1.47	2.04
838	83802Q	839	83902Q	UCF 206	1.1/4	2.06	3.20	0.43	1.75	1.25	1.87	5.46	0.79	0.55	1.65	2.40

UCFL-H/UCF-H

Metric size available

Cover in Stainless steel

Components

- *Housing in reinforced polyamide, with higher load capacity and good resistance to corrosive chemicals such as water, oils, petrol and alcoholic beverages. All our bearings can be used at temperatures between 0°C and +80°C.*
- *Ball bearings are made in chrome steel. They are also available, upon request, in stainless steel.*

Max misalignment between shaft and housing: 2.5°.

- *Grease nipple are made in nickel plated steel, but they can also be made in stainless steel on the stainless steel bearing.*
- *Spacers from nickel plated brass to reinforce fixing holes.*
- *Washer stainless steel.*
- ***"Cover"** in stainless steel*

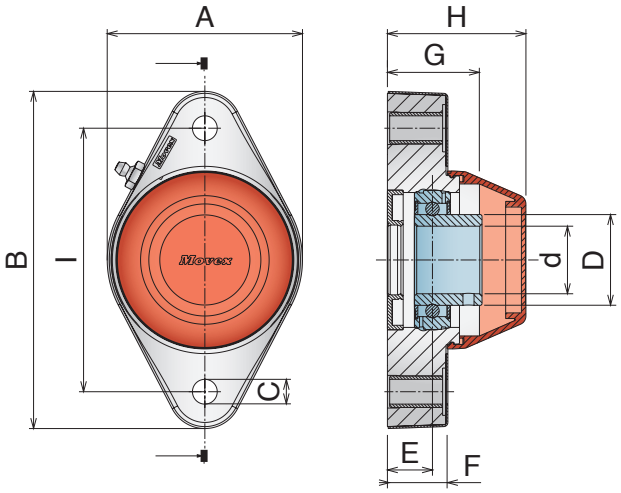

Standard

Locking collar

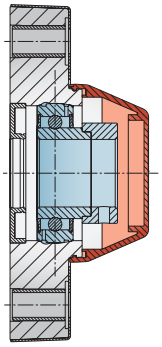

Solid Housing

Standard insert, sealed, open and close version

Chrome Steel	Part	Art-close	Part	Art-open	Series	d	I	A	B	C	D	E	F	G	H
	824	82412HQ	825	82512HQ	UCFL-H 206	1.1/4	4.61	3.41	5.89	0.43	1.59	0.79	1.06	1.65	2.42
	824	82404HQ	825	82504HQ	UCFL-H 208/117	1.1/2	4.61	3.73	5.89	0.43	2.09	0.75	1.06	1.73	2.64

"Long life" insert, sealed, open and close version

"Long life"	Part	Art-close	Part	Art-open	Series	d	I	A	B	C	D	E	F	G	H
	824	82412LHQ	825	82512LHQ	UCFL-H 206	1.1/4	4.61	3.41	5.89	0.43	1.59	0.79	1.06	1.65	2.42
	824	82404LHQ	825	82504LHQ	UCFL-H 208/117	1.1/2	4.61	3.73	5.89	0.43	2.09	0.75	1.06	1.73	2.64

Insert with locking collar, sealed, open and close version

Chrome Steel	Part	Art-close	Part	Art-open	Series	d	I	A	B	C	D	E	F	G	H
	826	82612HQ	827	82712HQ	UCFL-H 206	1.1/4	4.61	3.41	5.89	0.43	1.75	0.79	1.06	1.89	2.42
	826	82604HQ	827	82704HQ	UCFL-H 208/117	1.1/2	4.61	3.73	5.89	0.43	2.37	0.75	1.06	2.21	2.64

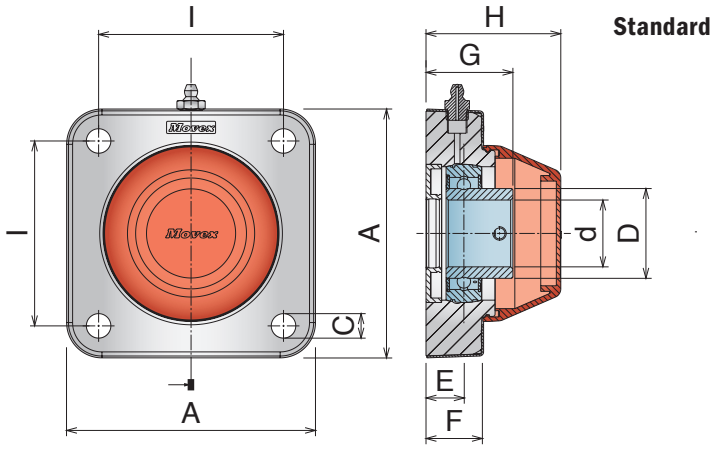

Standard

Locking collar

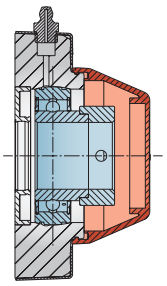

Solid Housing

Standard insert, sealed, open and close version

Chrome Steel	Part	Art-close	Part	Art-open	Series	d	I	A	C	D	E	F	G	H
	830	83002HQ	831	83102HQ	UCFL-H 206	1.1/4	3.27	4.40	0.43	1.59	0.67	0.98	1.53	2.38
	830	83004HQ	831	83104HQ	UCFL-H 208/83	1.1/2	3.27	4.40	0.43	2.09	0.77	0.98	1.77	2.58

"Long life" insert, sealed, open and close version

"Long life"	Part	Art-close	Part	Art-open	Series	d	I	A	C	D	E	F	G	H
	830	83002LHQ	831	83102LHQ	UCFL-H 206	1.1/4	3.27	4.40	0.43	1.59	0.67	0.98	1.53	2.38
	830	83004LHQ	831	83104LHQ	UCFL-H 208/83	1.1/2	3.27	4.40	0.43	2.09	0.77	0.98	1.77	2.58

Insert with locking collar, sealed, open and close version

Chrome Steel	Part	Art-close	Part	Art-open	Series	d	I	A	C	D	E	F	G	H
	832	83202HQ	833	83302HQ	UCFL-H 206	1.1/4	3.27	4.40	0.43	1.75	0.67	0.98	1.88	2.38
	832	83204HQ	833	83304HQ	UCFL-H 208/83	1.1/2	3.27	4.40	0.43	2.37	0.77	0.98	2.13	2.58

CL/CS

Metric size available

External housing in Stainless steel

Components

- *Housing in reinforced polyamide, with higher load capacity and good resistance to corrosive chemicals such as water, oils, petrol and alcoholic beverages. All our bearings can be used at temperatures between 0°C and +80°C.*
- *Ball bearings are made in chrome steel. They are also available, upon request, in stainless steel.*

Max misalignment between shaft and housing: 2.5°.

- *Grease nipple are made in nickel plated steel, but they can also be made in stainless steel on the stainless steel bearing.*
- *Spacers from nickel plated brass to reinforce fixing holes.*
- *Washer stainless steel.*
- ***"Cover"** in stainless steel*

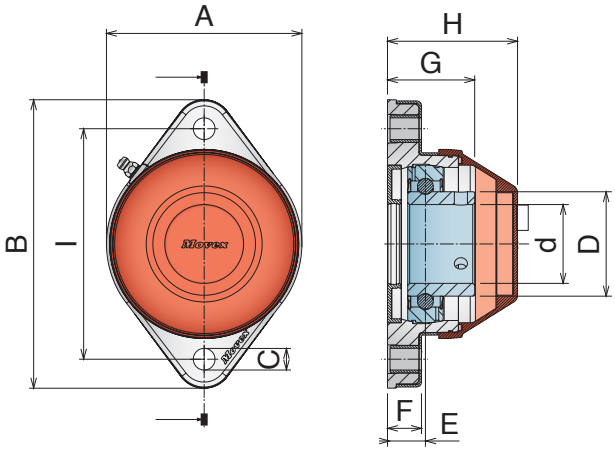

Standard

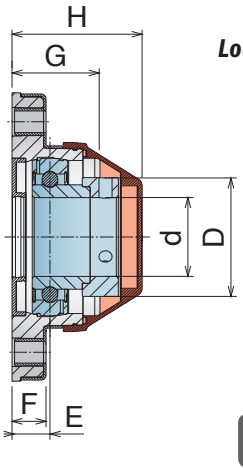

Locking collar

Solid Housing

Standard insert, sealed, open and close version

Chrome Steel	Part	Art-close	Part	Art-open	Series	d	I	A	B	C	D	E	F	G	H
	845	84504Q	846	84604Q	CL 208	1.1/2	4.61	3.90	5.77	0.43	2.09	0.73	0.65	1.69	2.60

Standard insert, sealed, open and close version

Stainless Steel	Part	Art-close	Part	Art-open	Series	d	I	A	B	C	D	E	F	G	H
	845	84504SSQ	846	84604SSQ	CL 208	1.1/2	4.61	3.90	5.77	0.43	2.09	0.73	0.65	1.69	2.60

"Long life" insert, sealed, open and close version

"Long life"	Part	Art-close	Part	Art-open	Series	d	I	A	B	C	D	E	F	G	H
	845	84504LQ	846	84604LQ	CL 208	1.1/2	4.61	3.90	5.77	0.43	2.09	0.73	0.65	1.69	2.60

Insert with locking collar, sealed, open and close version

Chrome Steel	Part	Art-close	Part	Art-open	Series	d	I	A	B	C	D	E	F	G	H
	847	84704Q	848	84804Q	CL 208	1.1/2	4.61	3.90	5.77	0.43	2.37	0.73	0.65	2.09	2.60

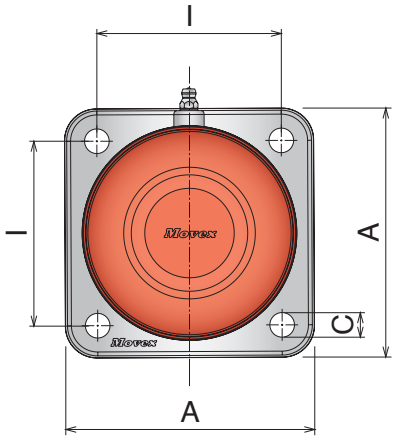

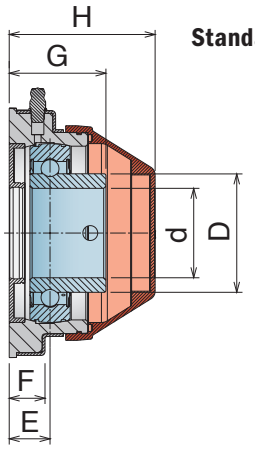

Standard

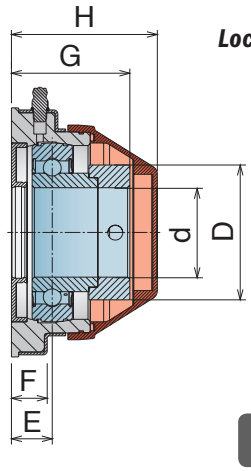

Locking collar

Solid Housing

Standard insert, sealed, open and close version

Chrome Steel	Part	Art-close	Part	Art-open	Series	d	I	A	C	D	E	F	G	H
	849	84904Q	850	85004Q	CS 208	1.1/2	3.25	4.37	0.43	2.09	0.73	0.65	1.69	2.60

Standard insert, sealed, open and close version

Stainless Steel	Part	Art-close	Part	Art-open	Series	d	I	A	C	D	E	F	G	H
	849	84904SSQ	850	85004SSQ	CS 208	1.1/2	3.25	4.37	0.43	2.09	0.73	0.65	1.69	2.60

"Long life" insert, sealed, open and close version

"Long life"	Part	Art-close	Part	Art-open	Series	d	I	A	C	D	E	F	G	H
	849	84904LQ	850	85004LQ	CS 208	1.1/2	3.25	4.37	0.43	2.09	0.73	0.65	1.69	2.60

Insert with locking collar, sealed, open and close version

Chrome Steel	Part	Art-close	Part	Art-open	Series	d	I	A	C	D	E	F	G	H
	851	85104Q	852	85204Q	CS 208	1.1/2	3.25	4.37	0.43	2.37	0.73	0.65	2.09	2.60

CL/CS

Metric size available

Components

- *Housing in reinforced Polyamide, white*
- *Ball bearings are made in stainless steel, they allow a misalignment between shaft and housing of max. 2.5°.*
- *Grease nipple made in stainless steel.*
- *Spacers in stainless steel to reinforce fixing holes.*
- *Washer for grease nipple in PE.*

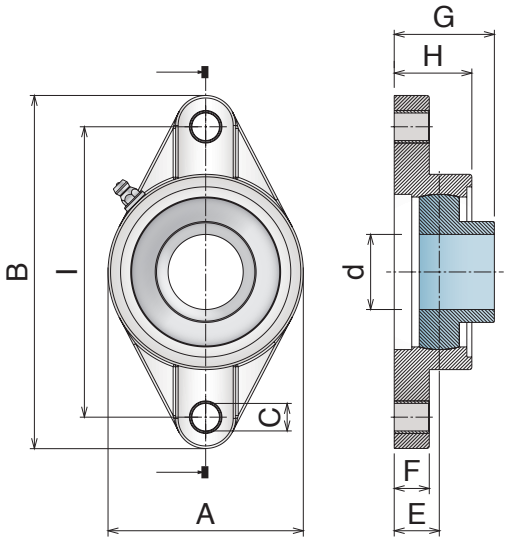

FL *Standard insert*

Part	Article-Nr.	Series	d	I	A	B	C	E	F	G	H
813	81300Q	FL 204	3/4	3.54	2.52	4.45	0.43	0.61	0.45	1.33	1.04
813	81301Q	FL 205	1	3.90	2.75	5.16	0.43	0.67	0.53	1.44	1.14
813	81302Q	FL 206	1.1/4	4.60	3.15	5.83	0.43	0.75	0.52	1.62	1.20
813	81303Q	FL 207	1.7/16	5.12	3.54	6.46	0.51	0.71	0.63	1.71	1.29
813	81304Q	FL 208	1.1/2	5.67	3.94	6.93	0.55	0.85	0.79	2.03	1.48

Safety Cap

Series	Article-Nr.
FL 204	89801
FL 205	89802
FL 206	89803
FL 207	89804
FL 208	89805

Stainless steel Insert

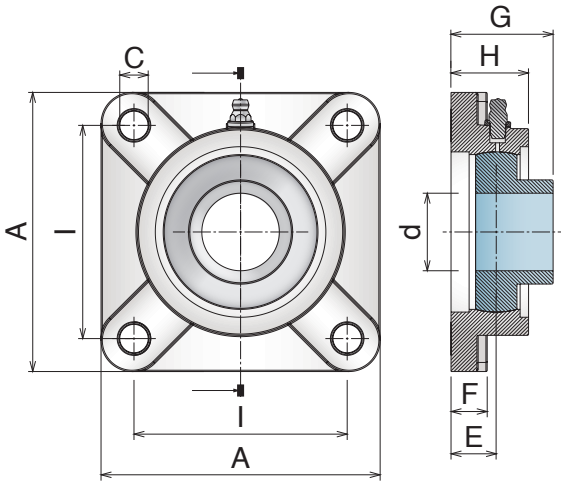

F *Standard insert*

Part	Article-Nr.	Series	d	I	A	C	E	F	G	H
814	81400Q	F 204	3/4	2.50	3.38	0.43	0.71	0.53	1.43	1.09
814	81401Q	F 205	1	2.75	3.74	0.43	0.67	0.55	1.44	1.10
814	81402Q	F 206	1.1/4	3.27	4.21	0.43	0.75	0.56	1.63	1.24
814	81403Q	F 207	1.7/16	3.62	4.64	0.51	0.85	0.61	1.85	1.37
814	81404Q	F 208	1.1/2	4.01	5.12	0.55	0.90	0.67	2.09	1.48

Safety Cap

Series	Article-Nr.
FL 204	89801
FL 205	89802
FL 206	89803
FL 207	89804
FL 208	89805

Stainless steel Insert

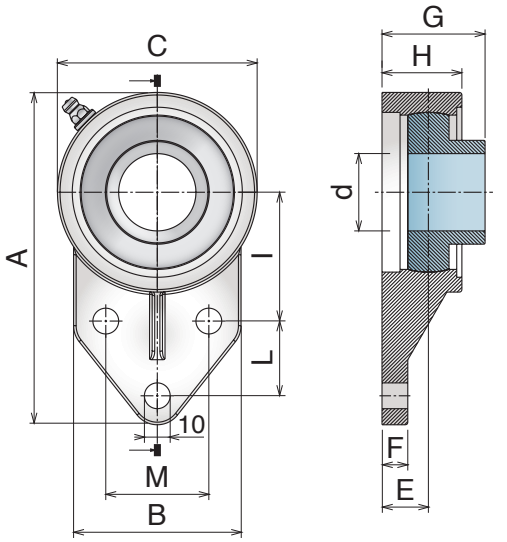

FB *Standard insert*

Stainless Steel

Part	Art.-Nr.	Series	d	A	I	L	M	C	B	E	F	G	H
815	81500Q	FB 204	3/4	4.27	1.69	0.87	1.50	2.44	2.44	0.61	0.47	1.33	1.03
815	81501Q	FB 205	1	4.75	1.81	0.81	1.62	2.70	2.50	0.83	0.47	1.60	1.32
815	81502Q	FB 206	1.1/4	5.51	2.06	1.25	1.87	3.27	2.95	0.75	0.55	1.62	1.24
815	81503Q	FB 207	1.7/16	6.18	2.37	1.25	2.00	3.74	3.50	0.84	0.63	1.84	1.44
815	81504Q	FB 208	1.1/2	6.46	2.37	1.62	1.97	3.94	3.07	0.87	0.71	1.87	1.48

FB *Standard insert*

Chrome Steel

Part	Art.-Nr.	Series	d	A	I	L	M	C	B	E	F	G	H
816	81600Q	FB 204	3/4	4.27	1.69	0.87	1.50	2.44	2.44	0.61	0.47	1.33	1.03
816	81601Q	FB 205	1	4.75	1.81	0.81	1.62	2.70	2.50	0.83	0.47	1.60	1.32
816	81602Q	FB 206	1.1/4	5.51	2.06	1.25	1.87	3.27	2.95	0.75	0.55	1.62	1.24
816	81603Q	FB 207	1.7/16	6.18	2.37	1.25	2.00	3.74	3.50	0.84	0.63	1.84	1.44
816	81604Q	FB 208	1.1/2	6.46	2.37	1.62	1.97	3.94	3.07	0.87	0.71	1.87	1.48

Safety Cap

Series	Article-Nr.
FL 204	89801
FL 205	89802
FL 206	89803
FL 207	89804
FL 208	89805

Stainless steel Insert

movexii.com

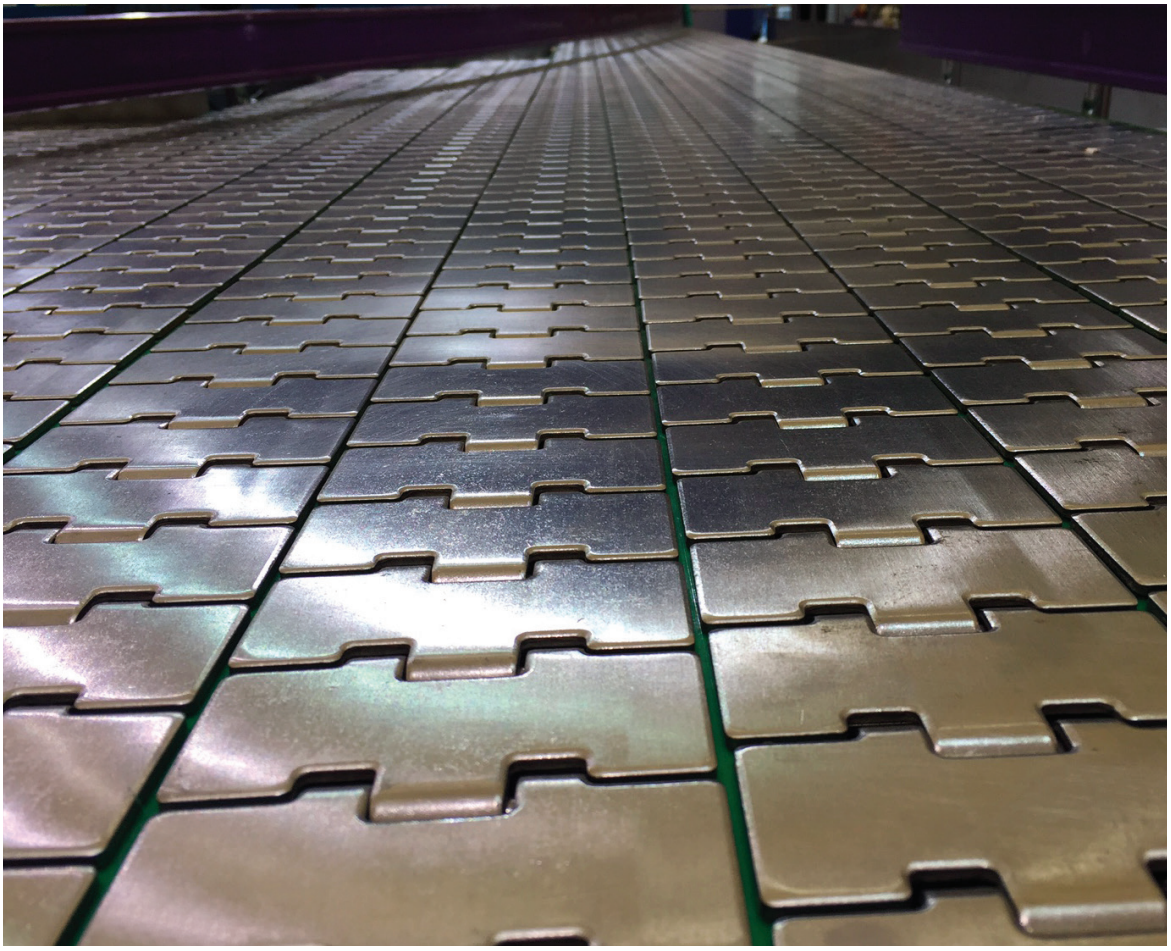

Movex®

343

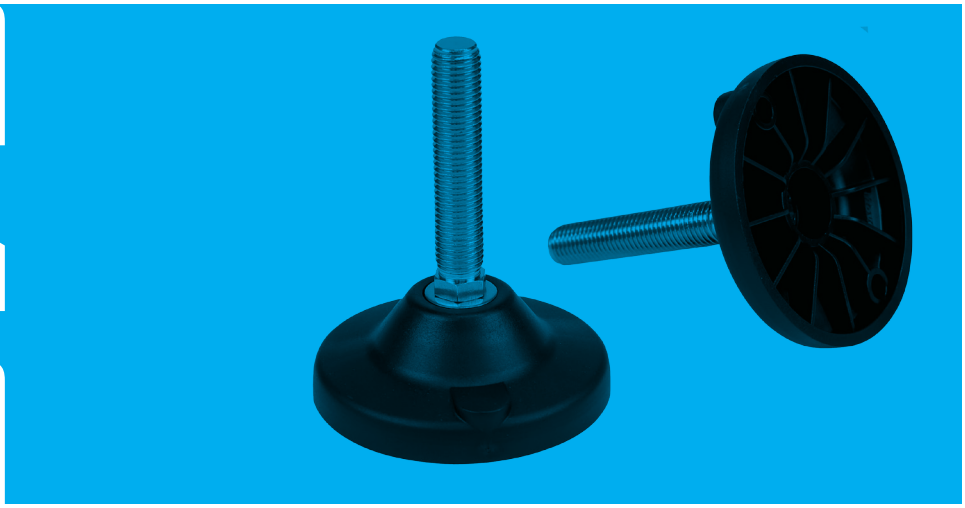

Leveling pads

Ø 1.58”-1.97”-2.36”

Pag 344

Ø 3.15”- 3.94”

Pag 346

Ø 3.15”- 3.94”- 4.72”

Pag 348

Ø 4.33”

Pag 350

Ø 4.84”

Pag 352

Ø 4.84”

Pag 354

Ø 2”-2.60”-3”
Ø 4”- 5”- 5.90”- 7.10”

Pag 356

Ø 3”- 4”

Pag 360

Ø 4.86”

Pag 362

Material:
Plate: Polyamide
Spindle: Stainless steel
or Zinc plated steel

901-909 Basic

Metric size available

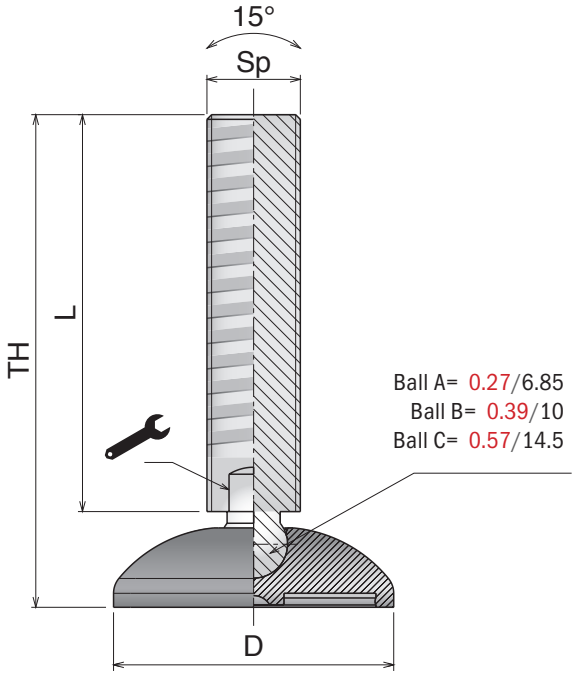

Accessories

Anti-slip pad

Part	Article-Nr.	For base
996	99601	Ø 1.58"
996	99602	Ø 1.97"
996	99603	Ø 2.36"

Stainless steel nuts

Part	Article-Nr.	Spindle
998	99801Y	3/8-16
998	99802Y	1/2-13
998	99804Y	5/8-11
998	99805Y	3/4-10

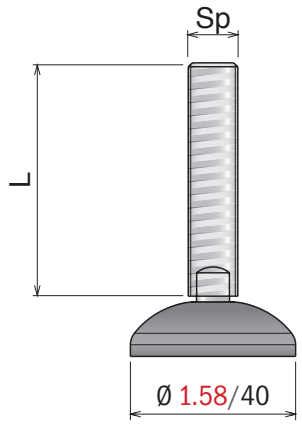

Leveller diam. 1.58" / 40 mm

Part	SS	FeZn	Sp	TH	L	Ball			LBS
901	90102Y	90102ZY	3/8-16	3.94	3.35	A	0.28	-	2.250
902	90202Y	90202ZY	1/2-13	3.94	3.35	B	0.35	-	2.700
902	90203Y	90203ZY		5.90	5.31	B	0.35	-	
903	90302Y	90302ZY	5/8-11	3.94	3.35	B	0.51	-	3.375
903	90303Y	90303ZY		5.90	5.31	B	0.51	-	
903	90302HY	90302ZHY		3.94	3.35	B	-	0.63	
903	90303HY	90303ZHY		5.90	5.31	B	-	0.63	

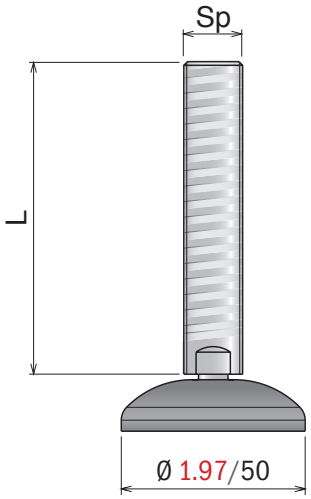

Leveller diam. 1.97" / 50 mm

Part	SS	FeZn	Sp	TH	L	Ball			LBS
904	90402Y	90402ZY	3/8-16	3.94	3.35	A	0.28	-	2.250
905	90502Y	90502ZY	1/2-13	3.94	3.35	B	0.35	-	2.700
905	90503Y	90503ZY		5.90	5.31	B	0.35	-	
906	90602Y	90602ZY	5/8-11	3.94	3.35	B	0.51	-	3.375
906	90603Y	90603ZY		5.90	5.31	B	0.51	-	
906	90602HY	90602ZHY		3.94	3.35	B	-	0.63	
906	90603HY	90603ZHY		5.90	5.31	B	-	0.63	

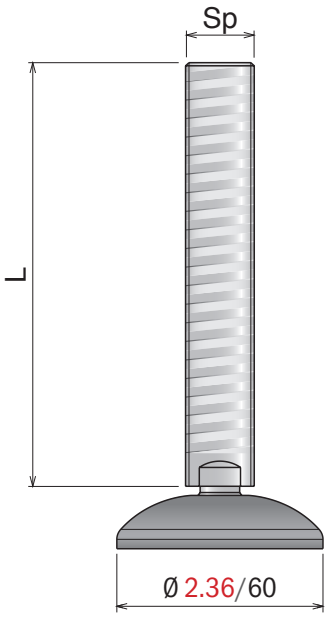

Leveller diam. 2.36" / 60 mm

Part	SS	FeZn	Sp	TH	L	Ball			LBS
907	90702Y	90702ZY	1/2-13	4.13	3.35	B	0.35	-	2.700
907	90703Y	90703ZY		6.10	5.31	B	0.35	-	
908	90801Y	90801ZY	5/8-11	4.13	3.35	B	0.51	-	3.375
908	90802Y	90802ZY		6.10	5.31	B	0.51	-	
908	90803Y	90803ZY		8.07	7.28	B	0.51	-	
908	90801HY	90801ZHY		4.13	3.35	B	-	0.63	
908	90802HY	90802ZHY		6.10	5.31	B	-	0.63	
908	90803HY	90803ZHY		8.07	7.28	B	-	0.63	
909	90902Y	90902ZY	3/4-10	6.10	5.31	C	0.63	-	3.600
909	90903Y	90903ZY		8.07	7.28	C	0.63	-	
909	90902HY	90902ZHY		6.10	5.31	C	-	0.79	
909	90903HY	90903ZHY		8.07	7.28	C	-	0.79	

Material:
Plate: Polyamide
Spindle: Stainless steel
or Zinc plated steel

953-957 Basic

Metric size available

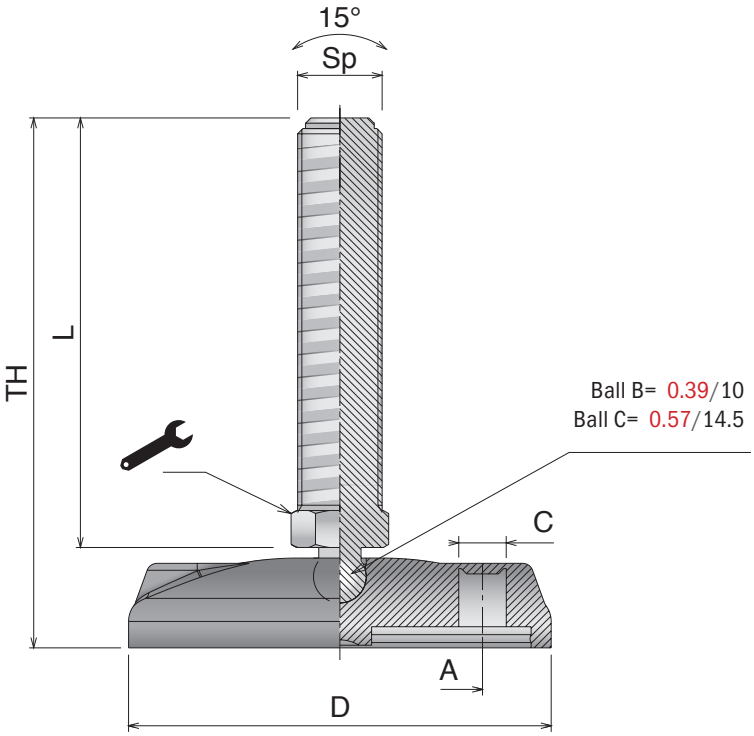

Accessories

Anti-slip pad

Part	Article-Nr.	For base
996	99604	Ø 3.15"
996	99605	Ø 3.94"

Stainless steel nuts

Part	Article-Nr.	Spindle
998	99802Y	1/2-13
998	99804Y	5/8-11
998	99805Y	3/4-10

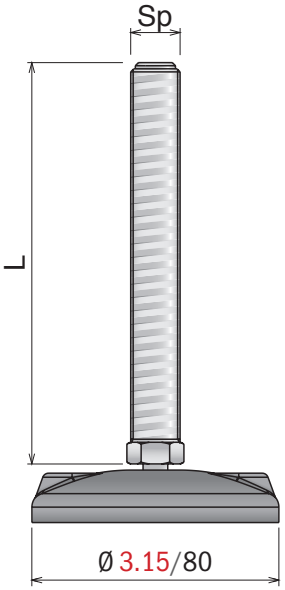

Leveller diam. 3.15" / 80 mm

Part	SS	FeZn	Sp	TH	L	A	C	Ball			LBS
953	95302Y	95302ZY	1/2-13	4.13	3.35	2.13	0.35	B	0.35	-	2.700
953	95303Y	95303ZY		6.10	5.31	2.13	0.35	B	0.35	-	
954	95401Y	95401ZY	5/8-11	4.13	3.35	2.13	0.35	B	0.51	-	3.375
954	95402Y	95402ZY		6.10	5.31	2.13	0.35	B	0.51	-	
954	95403Y	95403ZY		8.07	7.28	2.13	0.35	B	0.51	-	
954	95401HY	95401ZHY		4.13	3.35	2.13	0.35	B	-	0.63	
954	95402HY	95402ZHY		6.10	5.31	2.13	0.35	B	-	0.63	
954	95403HY	95403ZHY		8.07	7.28	2.13	0.35	B	-	0.63	
955	95502Y	95502ZY	3/4-10	6.10	5.31	2.13	0.35	C	0.63	-	4.050
955	95503Y	95503ZY		8.07	7.28	2.13	0.35	C	0.63	-	
955	95502HY	95502ZHY		6.10	5.31	2.13	0.35	C	-	0.79	
955	95503HY	95503ZHY		8.07	7.28	2.13	0.35	C	-	0.79	

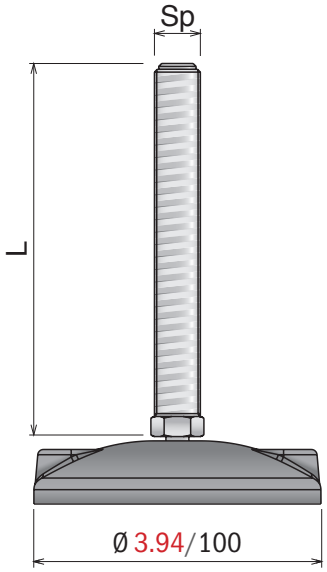

Leveller diam. 3.94" / 100 mm

Part	SS	FeZn	Sp	TH	L	A	C	Ball			LBS
956	95601Y	95601ZY	5/8-11	4.25	3.35	2.92	0.51	B	0.51	-	3.375
956	95602Y	95602ZY		6.22	5.31	2.92	0.51	B	0.51	-	
956	95603Y	95603ZY		8.19	7.28	2.92	0.51	B	0.51	-	
956	95601HY	95601ZHY		4.25	3.35	2.92	0.51	B	-	0.63	
956	95602HY	95602ZHY		6.22	5.31	2.92	0.51	B	-	0.63	
956	95603HY	95603ZHY		8.19	7.28	2.92	0.51	B	-	0.63	
957	95702Y	95702ZY	3/4-10	6.22	5.31	2.92	0.51	C	0.63	-	3.600
957	95703Y	95703ZY		8.19	7.28	2.92	0.51	C	0.63	-	
957	95702HY	95702ZHY		6.22	5.31	2.92	0.51	C	-	0.79	
957	95703HY	95703ZHY		8.19	7.28	2.92	0.51	C	-	0.79	

Material:
Plate: Polyamide
Spindle: Stainless steel
or Zinc plated steel

910-918 Standard

Metric size available

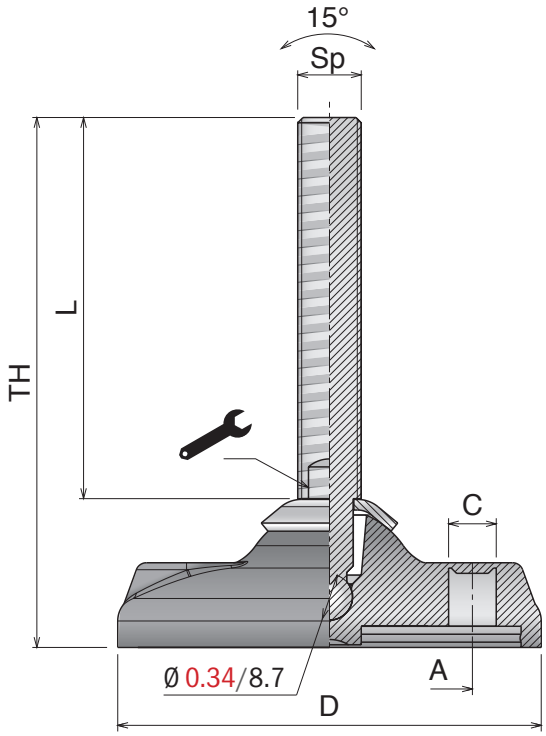

Accessories

Anti-slip pad

Part	Article-Nr.	For base
996	99604	Ø 3.15"
996	99605	Ø 3.94"
996	99606	Ø 4.72"

Stainless steel nuts

Part	Article-Nr.	Spindle
998	99802Y	1/2-13
998	99804Y	5/8-11
998	99805Y	3/4-10
998	99806Y	1-8

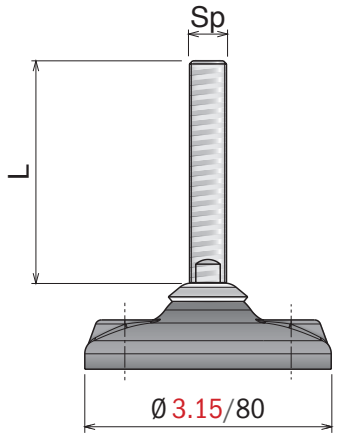

Leveller diam. 3.15" / 80 mm

Part	SS	FeZn	Sp	TH	L	A	C			LBS
910	91002Y	91002ZY	1/2-13	5.90	4.80	2.13	0.35	0.35	-	2.700
910	91003Y	91003ZY		7.87	6.77	2.13	0.35	0.35	-	
911	91101Y	91101ZY	5/8-11	3.74	2.64	2.13	0.35	0.51	-	3.375
911	91102Y	91102ZY		5.71	4.61	2.13	0.35	0.51	-	
911	91103Y	91103ZY		7.68	6.57	2.13	0.35	0.51	-	
912	91202Y	91202ZY	3/4-10	6.69	5.59	2.13	0.35	0.63	-	3.600
912	91203Y	91203ZY		8.66	7.56	2.13	0.35	0.63	-	
912	91202HY	91202ZHY		6.69	5.59	2.13	0.35	-	0.79	
912	91203HY	91203ZHY		8.66	7.56	2.13	0.35	-	0.79	

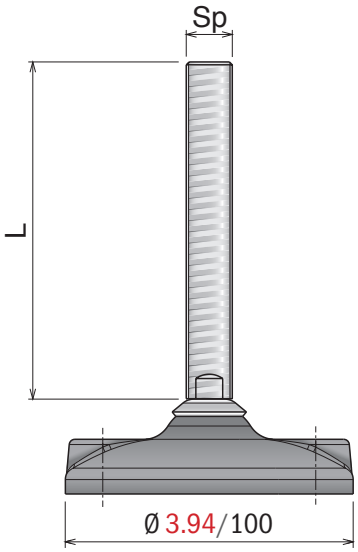

Leveller diam. 3.94" / 100 mm

Part	SS	FeZn	Sp	TH	L	A	C			LBS
913	91301Y	91301ZY	5/8-11	3.94	2.64	2.92	0.51	0.51	-	3.375
913	91302Y	91302ZY		5.90	4.61	2.92	0.51	0.51	-	
913	91303Y	91303ZY		7.87	6.57	2.92	0.51	0.51	-	
914	91402Y	91402ZY	3/4-10	6.89	5.59	2.92	0.51	0.63	-	3.600
914	91403Y	91403ZY		8.86	7.56	2.92	0.51	0.63	-	
914	91402HY	91402ZHY		6.89	5.59	2.92	0.51	-	0.79	
914	91403HY	91403ZHY		8.86	7.56	2.92	0.51	-	0.79	
915	91502Y	91502ZY	1-8	6.89	5.59	2.92	0.51	0.75	-	4.050
915	91503Y	91503ZY		8.86	7.56	2.92	0.51	0.75	-	

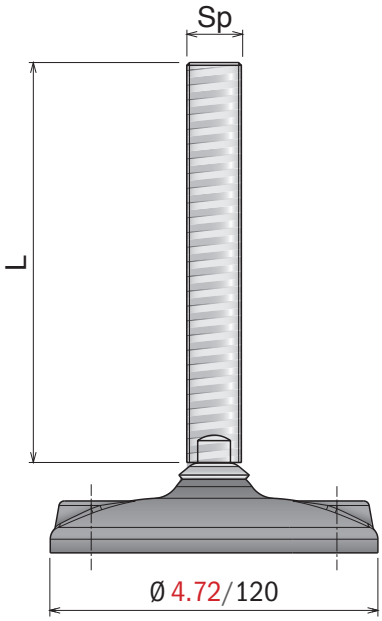

Leveller diam. 4.72" / 120 mm

Part	SS	FeZn	Sp	TH	L	A	C			LBS
916	91601Y	91601ZY	5/8-11	3.94	2.64	3.55	0.51	0.51	-	3.375
916	91602Y	91602ZY		5.90	4.61	3.55	0.51	0.51	-	
916	91603Y	91603ZY		7.87	6.57	3.55	0.51	0.51	-	
917	91702Y	91702ZY	3/4-10	6.89	5.59	3.55	0.51	0.63	-	3.600
917	91703Y	91703ZY		8.86	7.56	3.55	0.51	0.63	-	
917	91702HY	91702ZHY		6.89	5.59	3.55	0.51	-	0.79	
917	91703HY	91703ZHY		8.86	7.56	3.55	0.51	-	0.79	
918	91802Y	91802ZY	1-8	6.89	5.59	3.55	0.51	0.75	-	4.050
918	91803Y	91803ZY		8.86	7.56	3.55	0.51	0.75	-	

Material:
Plate: Polyamide
Spindle: Stainless steel
or Zinc plated steel

943-947 Ø 4.33"

Metric size available

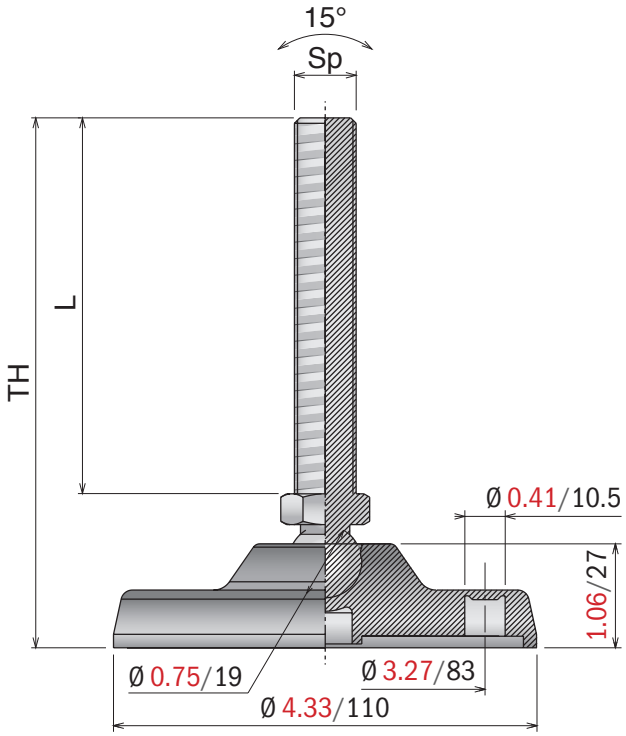

Accessories

Anti-slip pad

Part	Article-Nr.	For base
996	99607	Ø 4.33"

Stainless steel nuts

Part	Article-Nr.	Spindle
998	99804Y	5/8-11
998	99805Y	3/4-10
998	99806Y	1-8

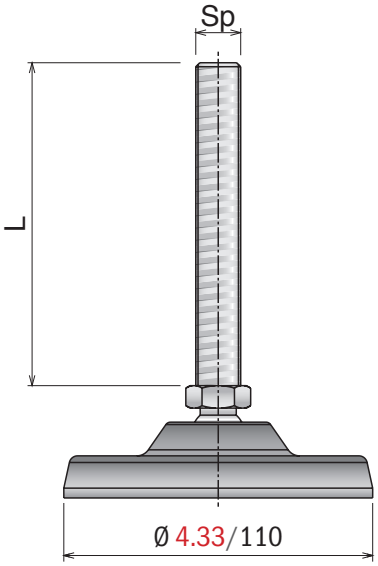

Leveller diam. 4.33" / 110 mm

Without antislip rubber

Part	SS	FeZn	Sp	TH	L		LBS
943	94301HY	94301ZHY	5/8-11	6.10	4.53	0.79	3.375
943	94302HY	94302ZHY		7.28	5.71	0.79	
943	94303HY	94303ZHY		9.25	7.68	0.79	
944	94401HY	94401ZHY	3/4-10	6.10	4.53	0.79	
944	94402HY	94402ZHY		7.28	5.71	0.79	
944	94403HY	94403ZHY		9.25	7.68	0.79	
945	94501HY	94501ZHY	1-8	6.10	4.53	0.95	4.050
945	94502HY	94502ZHY		7.28	5.71	0.95	
945	94503HY	94503ZHY		9.25	7.68	0.95	

With antislip rubber

Part	SS	FeZn	Sp	TH	L		LBS
943	94351HY	94351ZHY	5/8-11	6.10	4.53	0.79	3.375
943	94352HY	94352ZHY		7.28	5.71	0.79	
943	94353HY	94353ZHY		9.25	7.68	0.79	
944	94451HY	94451ZHY	3/4-10	6.10	4.53	0.79	
944	94452HY	94452ZHY		7.28	5.71	0.79	
944	94453HY	94453ZHY		9.25	7.68	0.79	
945	94551HY	94551ZHY	1-8	6.10	4.53	0.95	4.050
945	94552HY	94552ZHY		7.28	5.71	0.95	
945	94553HY	94553ZHY		9.25	7.68	0.95	

Material:
Plate: Polyamide
Spindle: Stainless steel
or Zinc plated steel

948-952 Ø 4.84"

Metric size available

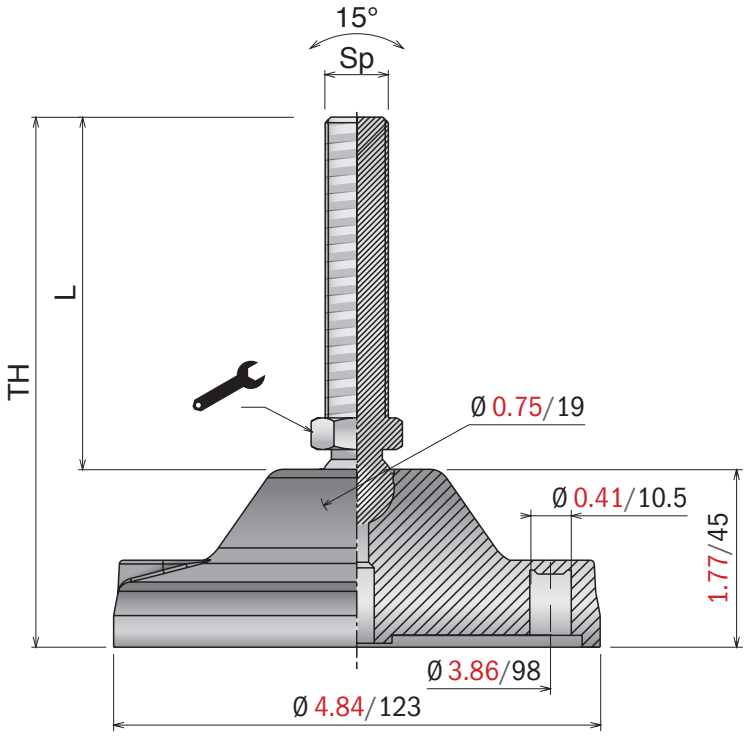

Accessories

Anti-slip pad

Part	Article-Nr.	For base
996	99608	Ø 4.84"

Stainless steel nuts

Part	Article-Nr.	Spindle
998	99804Y	5/8-11
998	99805Y	3/4-10
998	99806Y	1-8

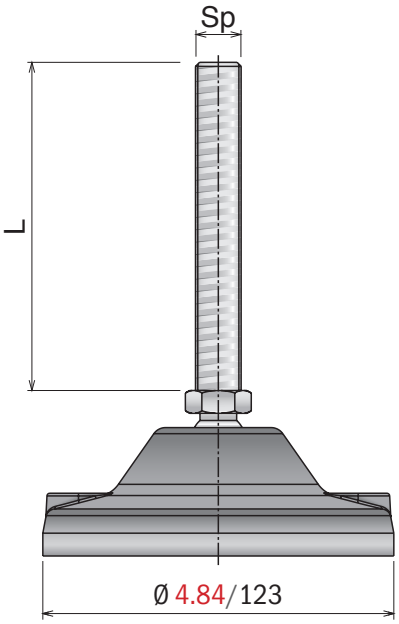

Leveller diam. 4.84" / 123 mm

Without antislip rubber

Part	SS	FeZn	Sp	TH	L		LBS
948	94801HY	94801ZHY	5/8-11	6.89	4.53	0.79	5.620
948	94802HY	94802ZHY		8.07	5.71	0.79	
948	94803HY	94803ZHY		10.04	7.68	0.79	
949	94901HY	94901ZHY	3/4-10	6.89	4.53	0.79	
949	94902HY	94902ZHY		8.07	5.71	0.79	
949	94903HY	94903ZHY		10.04	7.68	0.79	
950	95001HY	95001ZHY	1-8	6.89	4.53	0.95	
950	95002HY	95002ZHY		8.07	5.71	0.95	
950	95003HY	95003ZHY		10.04	7.68	0.95	

With antislip rubber

Part	SS	FeZn	Sp	TH	L		LBS
948	94851HY	948 51ZHY	5/8-11	6.89	4.53	0.79	5.620
948	94852HY	948 52ZHY		8.07	5.71	0.79	
948	94853HY	948 53ZHY		10.04	7.68	0.79	
949	94951HY	94951ZHY	3/4-10	6.89	4.53	0.79	
949	94952HY	94952ZHY		8.07	5.71	0.79	
949	94953HY	94953ZHY		10.04	7.68	0.79	
950	95051HY	95051ZHY	1-8	6.89	4.53	0.95	
950	95052HY	95052ZHY		8.07	5.71	0.95	
950	95053HY	95053ZHY		10.04	7.68	0.95	

Material:
Plate: Polyamide
Spindle: Stainless steel
or Zinc plated steel

958-959/931-932/981-983 Ø 4.84"

Metric size available

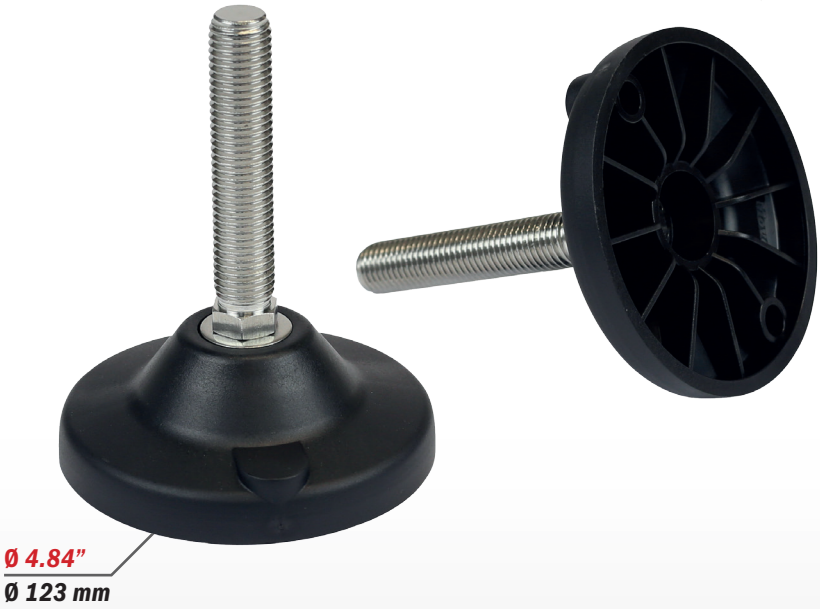

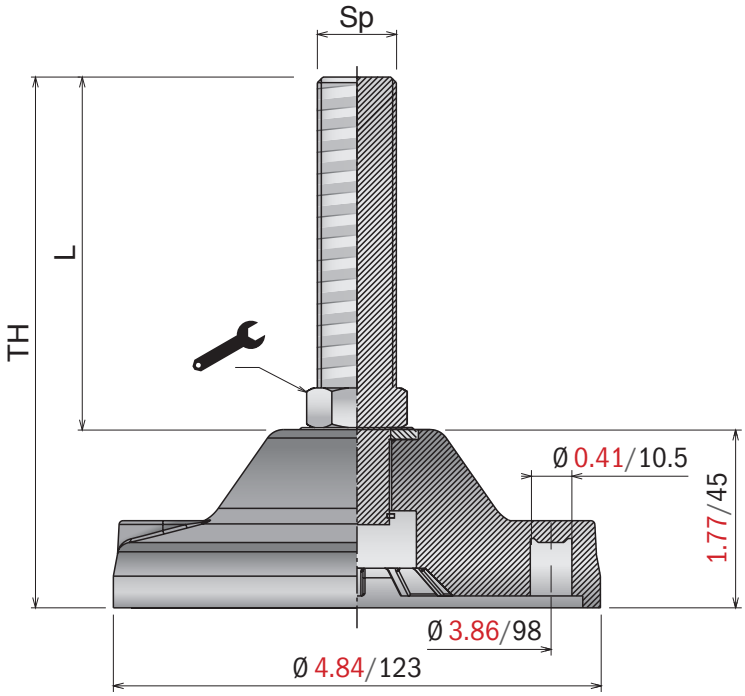

Accessories

Anti-slip pad

Part	Article-Nr.	For base
996	99608	Ø 4.84"

Stainless steel nuts

Part	Article-Nr.	Spindle
998	99805Y	3/4-10
998	99806Y	1-8

Ø 4.84" 958-959/931-932/981-983

Leveling pads

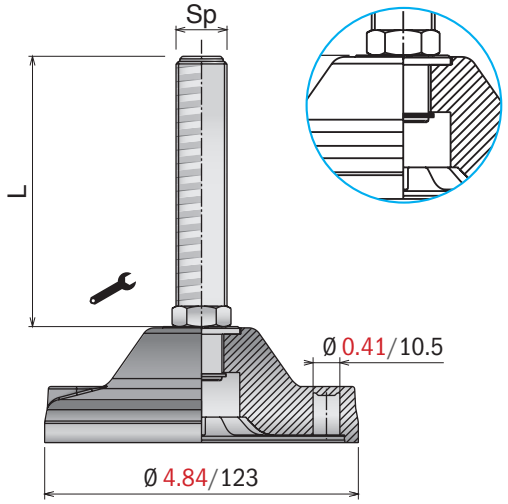

Leveller diam. 4.84" / 123 mm

Without antislip rubber

Part	SS	FeZn	Sp	TH	L		N
958	95802HY	95802ZHY	3/4-10	7.87	5.83	0.63	6.750
958	95803HY	95803ZHY		9.84	7.79	0.63	
959	95902HY	95902ZHY		7.87	5.83	0.95	
959	95903HY	95903ZHY	1-8	9.84	7.79	0.95	
984	98402HY	98402ZHY		7.87	5.83	1.26	
984	98403HY	98403ZHY		9.84	7.79	1.26	

With antislip rubber

Part	SS	FeZn	Sp	TH	L		N
958	95852HY	95852ZHY	3/4-10	7.87	5.83	0.63	6.750
958	95853HY	95853ZHY		9.84	7.79	0.63	
959	95952HY	95952ZHY		7.87	5.83	0.79	
959	95953HY	95953ZHY	1-8	9.84	7.79	0.79	
984	98452HY	98452ZHY		7.87	5.83	0.95	
984	98453HY	98453ZHY		9.84	7.79	0.95	

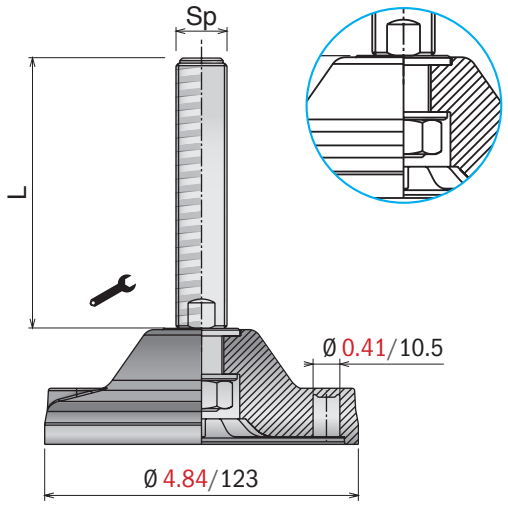

Leveller diam. 4.84" / 123 mm

Without antislip rubber

Part	SS	FeZn	Sp	TH	L		LBS
931	93102Y	93102ZY	3/4-10	7.87	5.83	0.63	6.750
931	93103Y	93103ZY		9.84	7.79	0.63	
932	93202Y	93202ZY	1-8	7.87	5.83	0.79	
932	93203Y	93203ZY		9.84	7.79	0.79	
933	93302Y	93302ZY	1 1/4-7	7.87	5.83	0.95	
933	93303Y	93303ZY		9.84	7.79	0.95	

With antislip rubber

Part	SS	FeZn	Sp	TH	L		LBS
931	93152Y	93152ZY	3/4-10	7.87	5.83	0.63	6.750
931	93153Y	93153ZY		9.84	7.79	0.63	
932	93252Y	93252ZY	1-8	7.87	5.83	0.79	
932	93253Y	93253ZY		9.84	7.79	0.79	
933	93352Y	93352ZY	1 1/4-7	7.87	5.83	0.95	
933	93353Y	93353ZY		9.84	7.79	0.95	

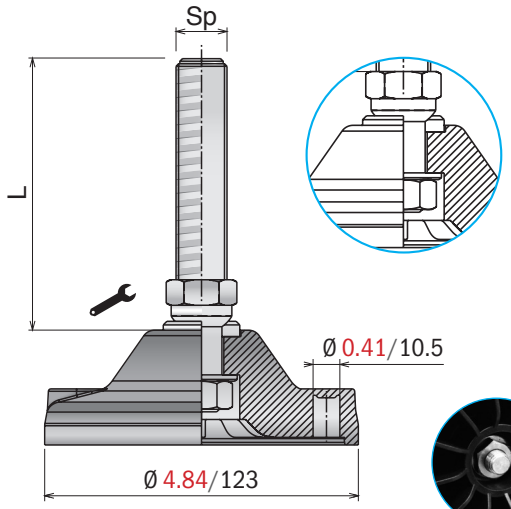

Leveller diam. 4.84" / 123 mm

Without antislip rubber

Part	SS	FeZn	Sp	TH	L		LBS
981	98102HY	98102ZHY	3/4-10	7.87	5.83	0.63	6.750
981	98103HY	98103ZHY		9.84	7.79	0.63	
982	98202HY	98202ZHY	1-8	7.87	5.83	0.95	
982	98203HY	98203ZHY		9.84	7.79	0.95	
983	98302HY	98302ZHY	1 1/4-7	7.87	5.83	1.26	
983	98303HY	98303ZHY		9.84	7.79	1.26	

With antislip rubber

Part	SS	FeZn	Sp	TH	L		LBS
981	98152HY	98152ZHY	3/4-10	7.87	5.83	0.63	6.750
981	98153HY	98153ZHY		9.84	7.79	0.63	
982	98252HY	98252ZHY	1-8	7.87	5.83	0.95	
982	98253HY	98253ZHY		9.84	7.79	0.95	
983	98352HY	98352ZHY	1 1/4-7	7.87	5.83	1.26	
983	98353HY	98353ZHY		9.84	7.79	1.26	

Material:
Base plate, spindle and washer:
Stainless steel

919-980 Easy clean

Metric size available

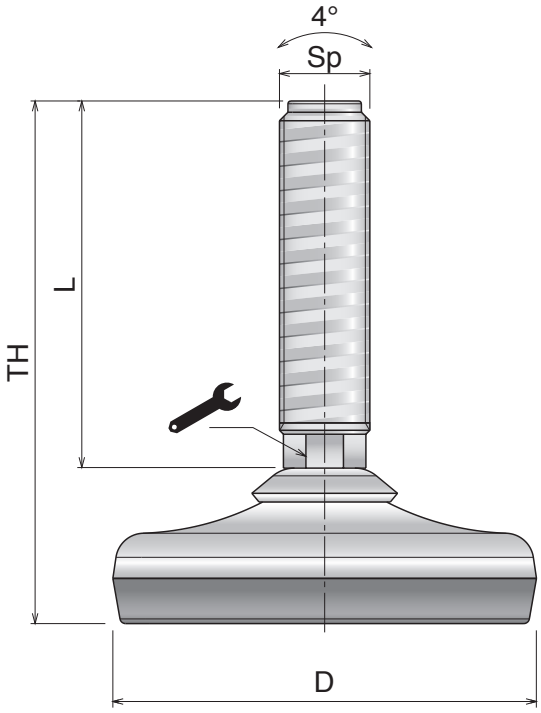

Accessories

Stainless steel nuts

Part	Article-Nr.	Spindle
998	99802Y	1/2-13
998	99804Y	5/8-11
998	99805Y	3/4-10
998	99806Y	1-8

Material:
Base plate, spindle and washer:
Stainless steel

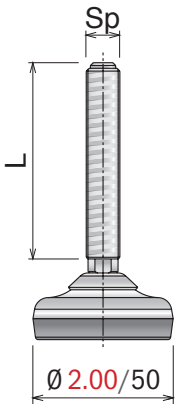

Leveller diam. 2.00" / 50 mm

Part	Article-Nr.	Sp	TH	L		LBS
919	91902Y	1/2-13	3.94	2.95	0.35	675
919	91903Y		5.91	4.92	0.35	
920	92002Y	5/8-11	5.51	4.53	0.51	
920	92003Y		7.48	6.50	0.51	
921	92103Y	3/4-10	6.50	5.51	0.63	

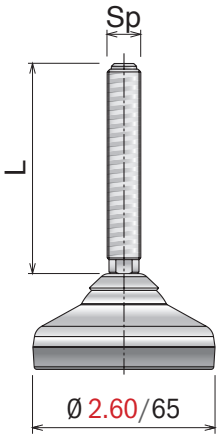

Leveller diam. 2.60" / 65 mm

Part	Article-Nr.	Sp	TH	L		LBS
972	97202Y	1/2-13	4.30	2.95	0.35	1200
972	97203Y		6.27	4.92	0.35	
973	97302Y	5/8-11	5.88	4.53	0.51	
973	97303Y		7.85	6.50	0.51	
974	97403Y	3/4-10	6.86	5.51	0.63	

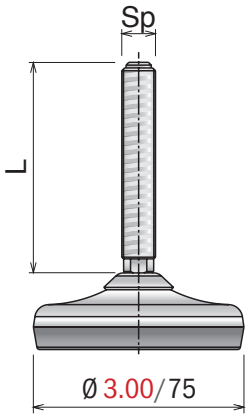

Leveller diam. 3.00" / 75 mm

Part	Article-Nr.	Sp	TH	L		LBS
922	92202Y	1/2-13	4.13	2.95	0.35	1800
922	92203Y		6.10	4.92	0.35	
923	92302Y	5/8-11	5.70	4.53	0.51	
923	92303Y		7.68	6.50	0.51	
924	92403Y	3/4-10	6.69	5.51	0.63	

919-980 *Easy clean*

Leveling pads

Material:
Base plate, spindle and washer:
Stainless steel

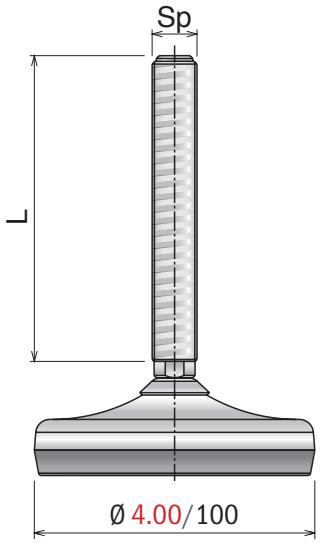

Leveller diam. 4.00" / 100 mm

Part	Article-Nr.	Sp	TH	L		LBS
925	92502Y	5/8-11	5.90	4.53	0.51	4500
925	92503Y		7.87	6.50	0.51	
926	92602Y	3/4-10	6.89	5.51	0.63	
926	92603Y		8.86	7.48	0.63	
927	92703Y	1-8	8.86	7.48	0.75	
927	92704Y		11.22	9.84	0.75	

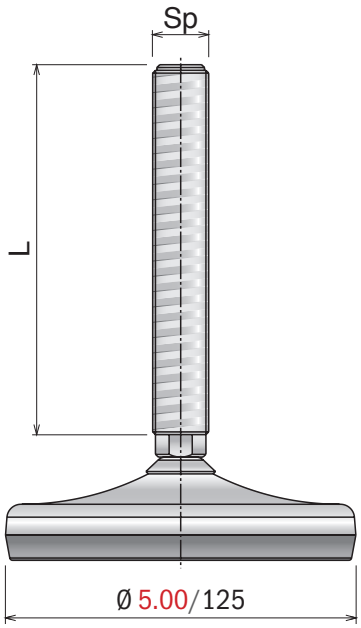

Leveller diam. 5.00" / 125 mm

Part	Article-Nr.	Sp	TH	L		LBS
928	92802Y	3/4-10	7.10	5.51	0.63	6750
928	92803Y		9.05	7.48	0.63	
929	92903Y	1-8	9.05	7.48	0.75	
929	92904Y		11.41	9.84	0.75	

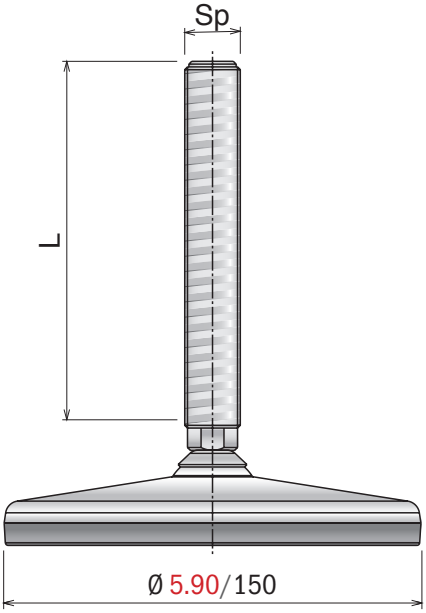

Leveller diam. 5.90" / 150 mm

Part	Article-Nr.	Sp	TH	L		LBS
975	97502Y	3/4-10	6.86	5.51	0.63	7800
975	97503Y		8.83	7.48	0.63	
976	97602Y	1-8	8.83	7.48	0.75	
976	97603Y		11.19	9.84	0.75	
977	97703Y	1 1/4-7	8.83	7.48	0.95	
977	97704Y		11.19	9.84	0.95	

Material:
Base plate, spindle and washer:
Stainless steel

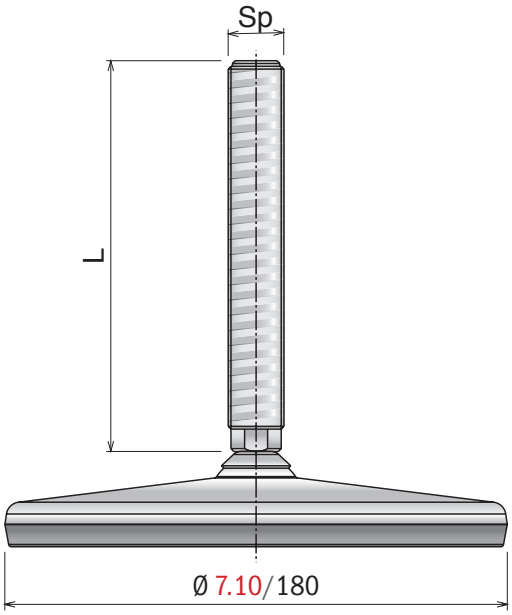

Leveller diam. 7.10" / 180 mm

Part	Article-Nr.	Sp	TH	L		LBS
978	97802Y	3/4-10	6.86	5.51	0.63	
978	97803Y		8.83	7.48	0.63	
979	97903Y	1-8	8.83	7.48	0.75	
979	97904Y		11.19	9.84	0.75	8500
980	98003Y	1 1/4-7	8.83	7.48	0.95	
980	98004Y		11.19	9.84	0.95	
980	98005Y		13.16	11.81	0.95	

Material:
Base plate, spindle and washer:
Stainless steel

934-939 Easy clean

Metric size available

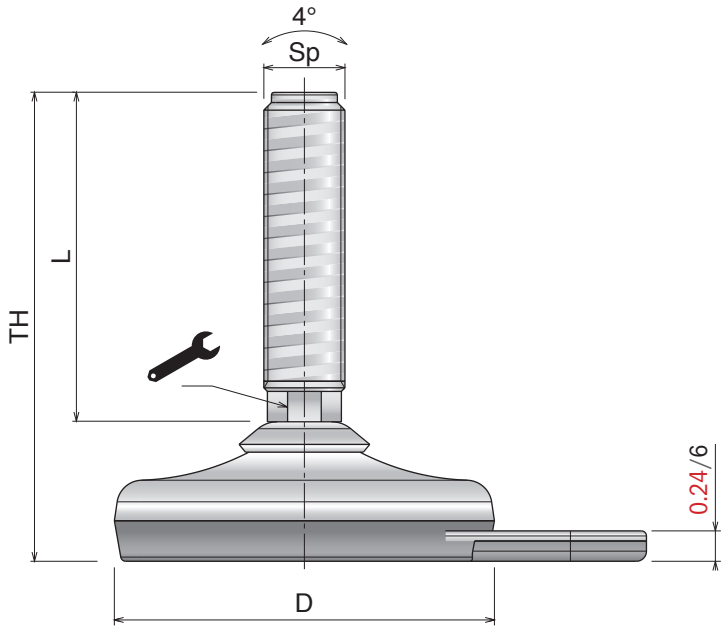

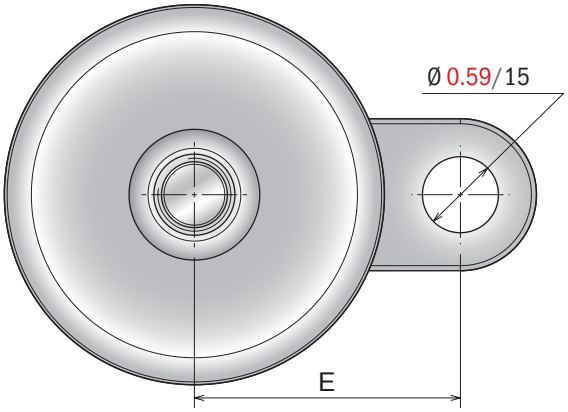

Movex

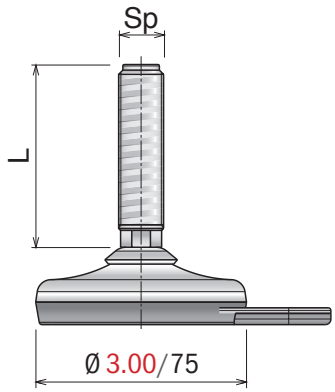

Leveller diam. 3.00" / 75 mm with fixing holes

Part	Article-Nr.	Sp	TH	L		LBS
934	93402Y	1/2-13	4.13	2.95	0.35	675
934	93403Y		6.10	4.92	0.35	
935	93502Y	5/8-11	5.70	4.53	0.51	
935	93503Y		7.68	6.50	0.75	
936	93603Y	3/4-10	6.69	5.51	0.63	

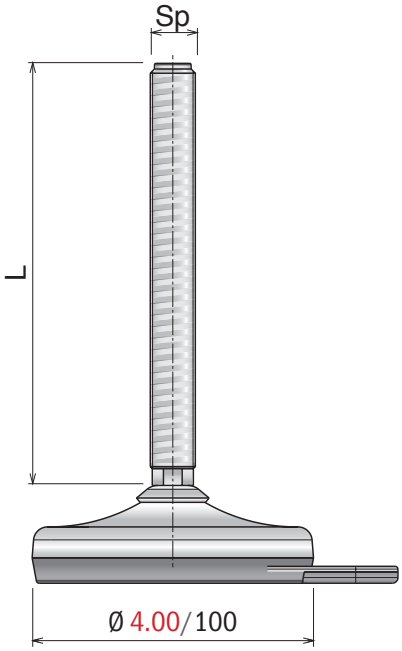

Leveller diam. 4.00" / 100 mm with fixing holes

Part	Article-Nr.	Sp	TH	L		LBS
937	93702Y	5/8-11	5.90	4.53	0.51	4500
937	93703Y		7.87	6.50	0.51	
938	93802Y	3/4-10	6.89	5.51	0.63	
938	93803Y		8.86	7.48	0.63	
939	93903Y	1-8	8.86	7.48	0.75	

Accessories

Stainless steel nuts

Part	Article-Nr.	Spindle
998	99802Y	1/2-13
998	99804Y	5/8-11
998	99805Y	3/4-10
998	99806Y	1-8

Material:
Stainless steel
or Zinc plated steel

960-971

Metric size available

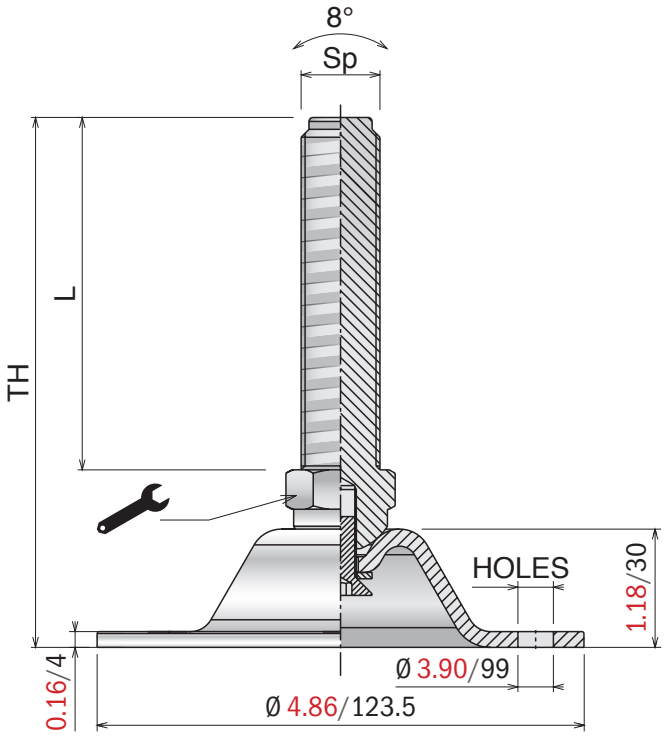

Accessories

Stainless steel nuts

Part	Article-Nr.	Spindle
998	99804Y	5/8-11
998	99805Y	3/4-10
998	99806Y	1-8
998	99807Y	1 1/4-7

Material:
SS: *Stainless steel*
FeZn: *Zinc plated steel*

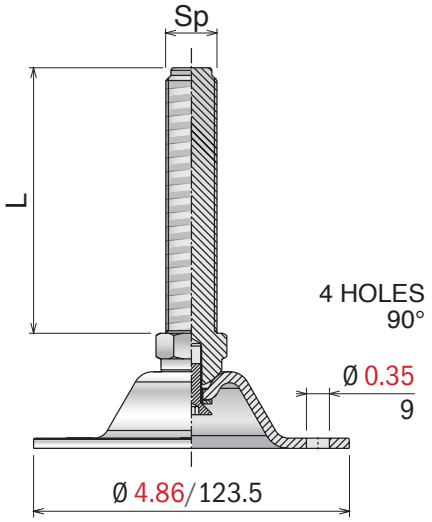

Leveller diam. 4.86" / 123 mm with 4 holes 90°

Part	SS	FeZn	Sp	TH	L		LBS
960	96001HY	96001ZHY	5/8-11	6.10	4.53	0.79	2.250
960	96002HY	96002ZHY		6.89	5.31	0.79	
961	96101HY	96101ZHY	3/4-10	6.10	4.53	0.95	
961	96102HY	96102ZHY		6.89	5.31	0.95	
962	96201HY	96201ZHY	1-8	6.69	4.92	0.95	
962	96202HY	96202ZHY		9.05	7.28	0.95	
963	96301HY	96301ZHY	1 1/4-7	6.69	4.92	1.18	
963	96302HY	96302ZHY		9.05	7.28	1.18	

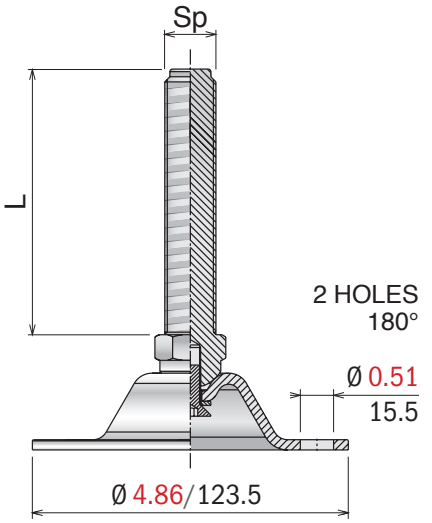

Leveller diam. 4.86" / 123 mm with 2 holes 180°

Part	SS	FeZn	Sp	TH	L		LBS
964	96401HY	96401ZHY	5/8-11	6.10	4.53	0.79	2.250
964	96402HY	96402ZHY		6.89	5.31	0.79	
965	96501HY	96501ZHY	3/4-10	6.10	4.53	0.95	
965	96502HY	96502ZHY		6.89	5.31	0.95	
966	96601HY	96601 ZHY	1-8	6.69	4.92	0.95	
966	96602HY	96602 ZHY		9.05	7.28	0.95	
967	96701HY	96701ZHY	1 1/4-7	6.69	4.92	1.18	
967	96702HY	96702ZHY		9.05	7.28	1.18	

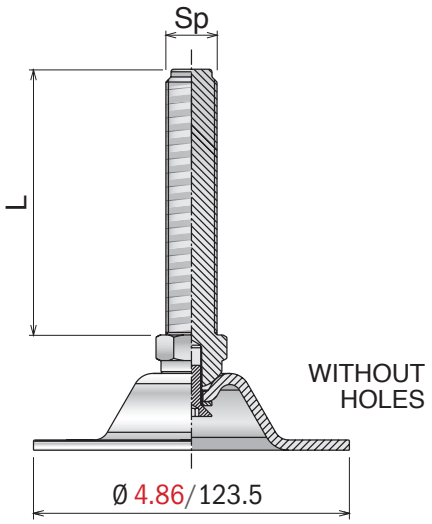

Leveller diam. 4.86" / 123 mm without holes

Part	SS	FeZn	Sp	TH	L		LBS
968	96801HY	96801ZHY	5/8-11	6.10	4.53	0.79	2.250
968	96802HY	96802ZHY		6.89	5.31	0.79	
969	96901HY	96901ZHY	3/4-10	6.10	4.53	0.95	
969	96902HY	96902ZHY		6.89	5.31	0.95	
970	97001HY	97001ZHY	1-8	6.69	4.92	0.95	
970	97002HY	97002ZHY		9.05	7.28	0.95	
971	97101HY	97101ZHY	1 1/4-7	6.69	4.92	1.18	
971	97102HY	97102ZHY		9.05	7.28	1.18	

movexii.com

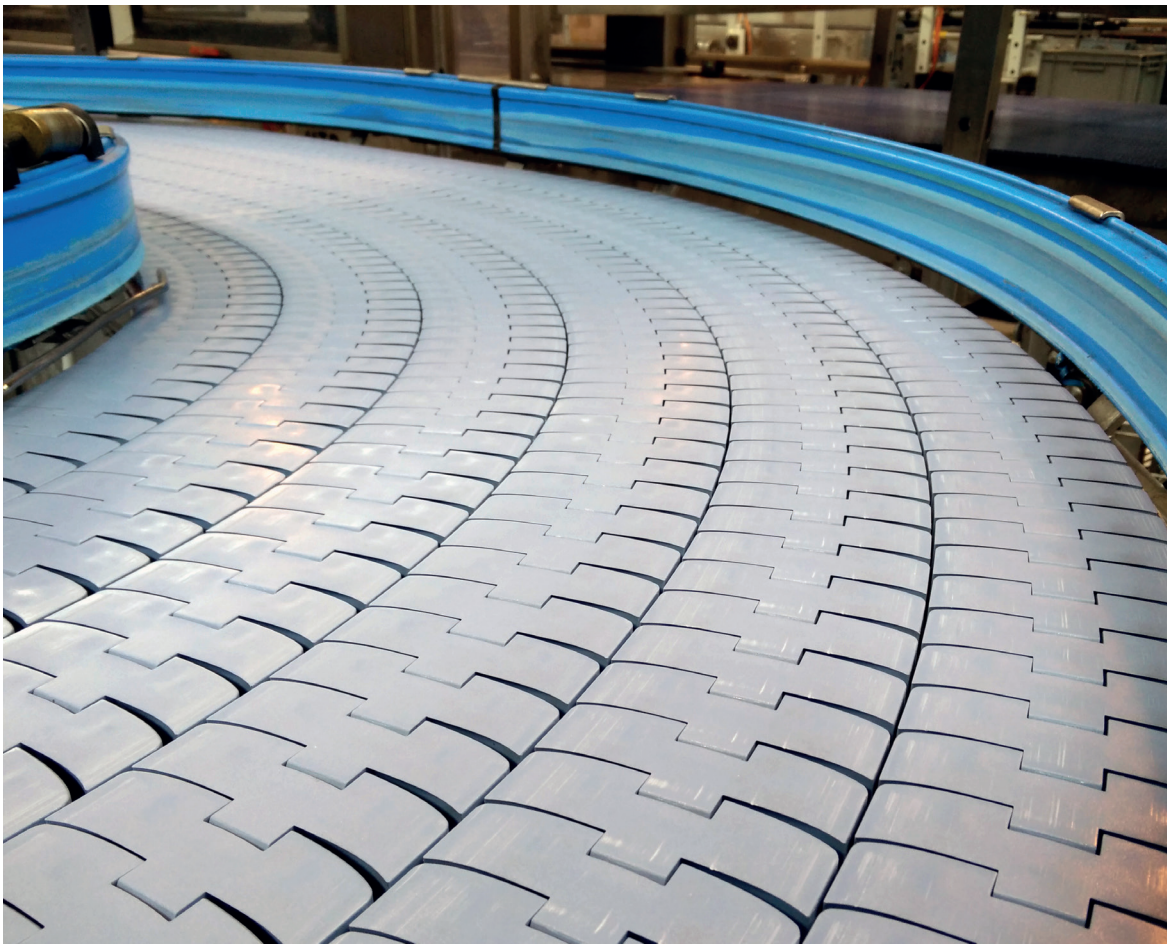

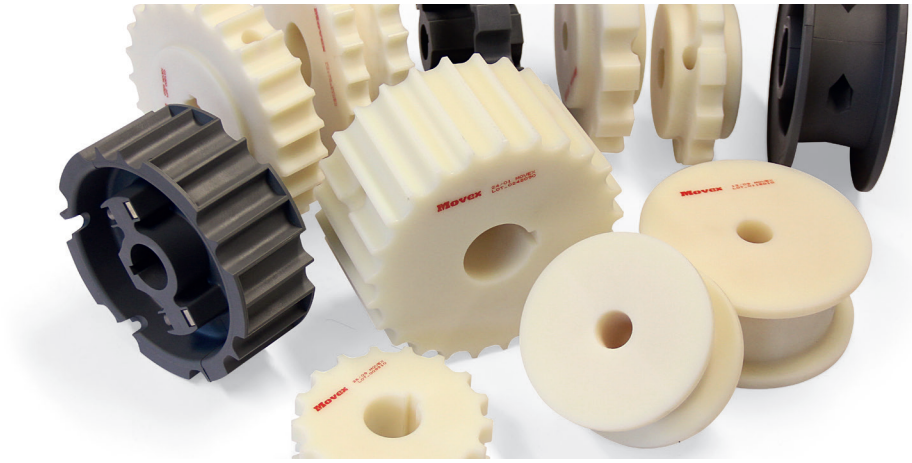

Movex®

365

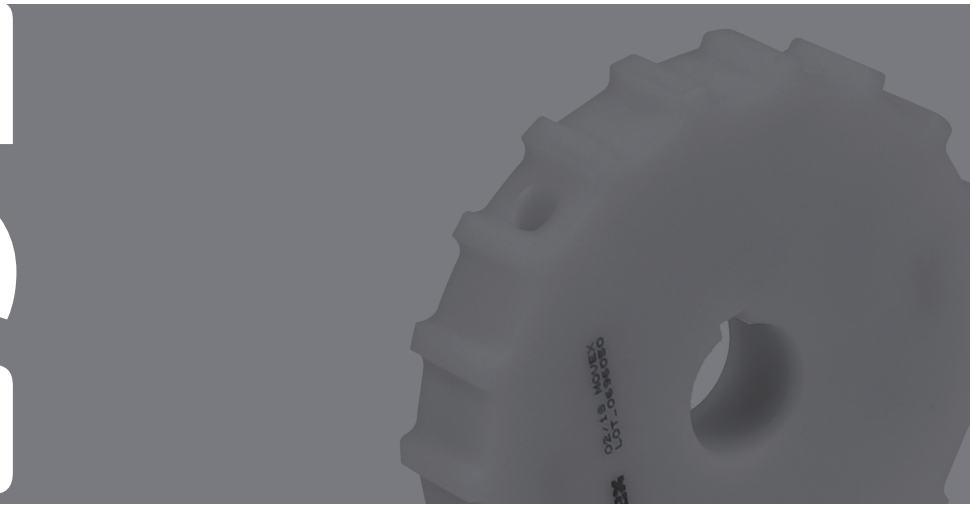

Sprockets Position for:
510FT

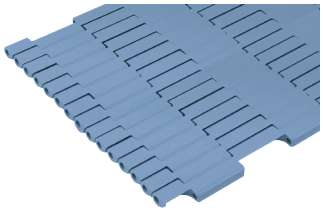

Pag 366

Sprockets Position for:
520FT - 520GT - 520FG - 520LBP - 520 FTT

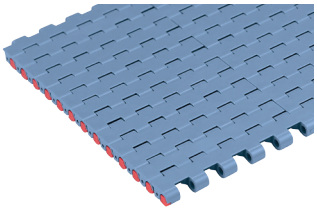

Pag 367/368

Sprockets Position for:
550FT - 550GT - 550GTsi - 550LBP

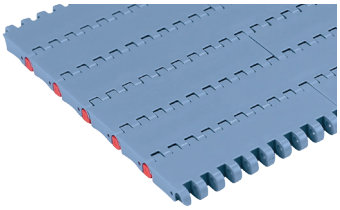

Pag 369

Sprockets Position for:
550FTT

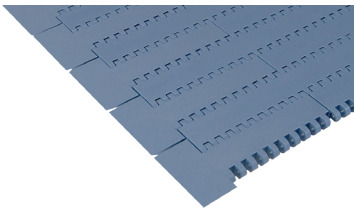

Pag 370

Sprockets Position for:
551FT - 551GT - 551GTsi - 551LBP

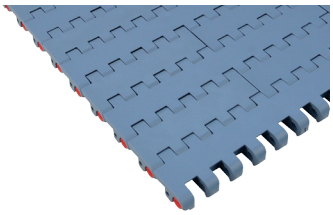

Pag 371

Sprockets Position for:
551FTT

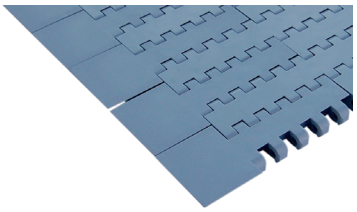

Pag 372

Sprockets Position for:
556FT - 556GT

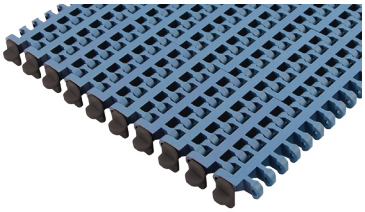

Pag 373

Sprockets Position for:
600 Standard

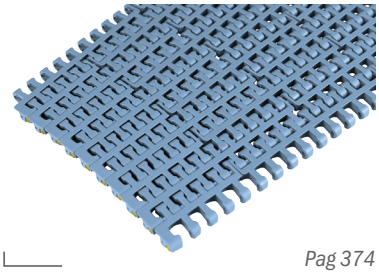

Pag 374

Sprockets Position for:
600 Heavy duty

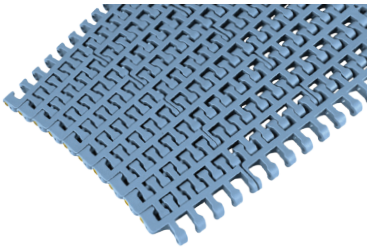

Pag 375

Sprockets Position for:
600 Small radius

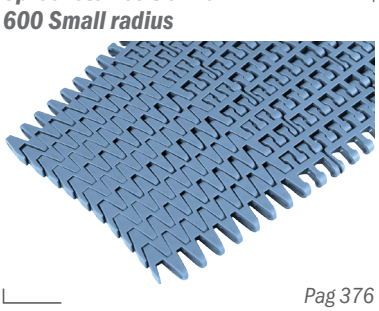

Pag 376

Sprockets Position for:
600 Heavy duty / Small radius

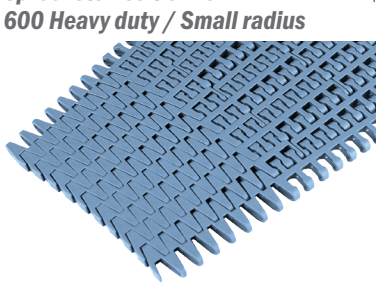

Pag 277

510

Sprockets Position for: 510 FT

A: *1.5"*/38.1 / **B:** *3"*/76.2 *(steps)*

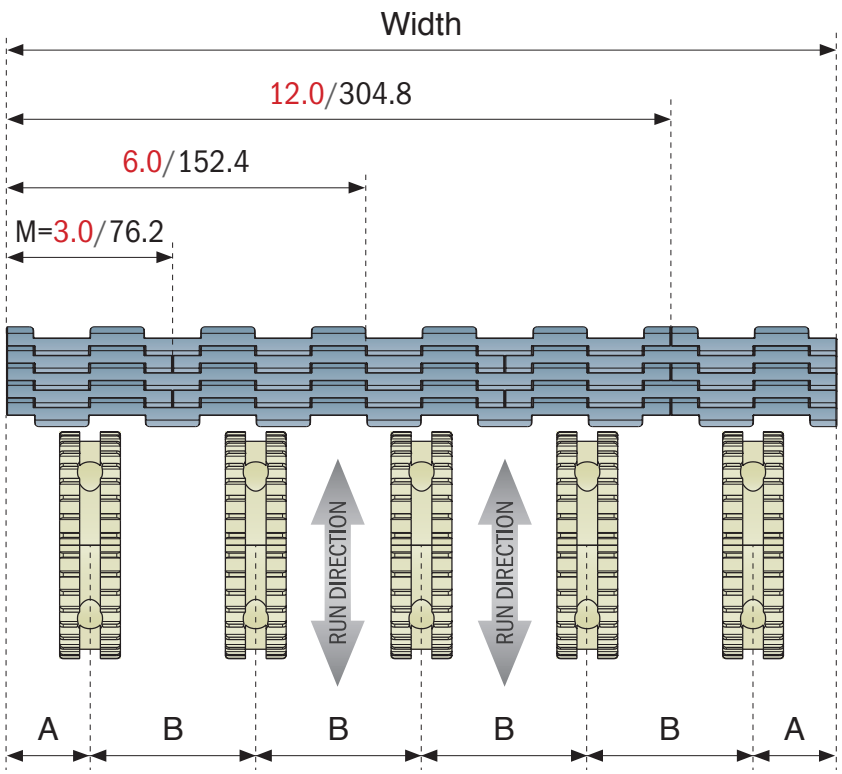

Belt width	Recommended number of sprockets*
3"/76.2	1
6"/152.4	2
9"/228.6	3
12"/304.8	4
15"/381.0	5
18"/457.2	6
21"/533.4	7
24"/609.6	8

***If more sprockets are required contact application engineering.**

IMPORTANT

B dimension is the recommended distance between the sprockets.

520

Sprockets Position for: 520FT - 520GT - 520FG - 520LBP - 520FTT

Option A

A: *1.5"/38.25* / **B:** *3.34"/85 (steps)* / **C:** *1.84"/46.75*

BOTTOM VIEW

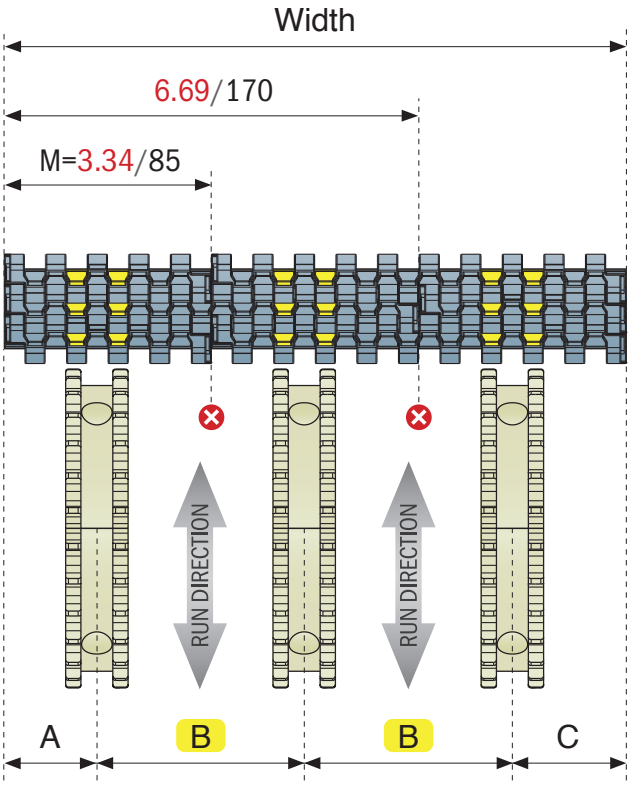

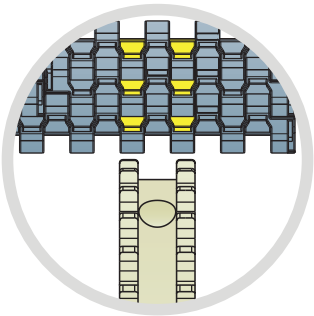

Belt width	Recommended number of sprockets*
3.34"/85	1
6.69"/170	2
10.04"/255	3
13.38"/340	4
16.73"/425	5
20.08"/510	6
23.42"/595	7
26.77"/680	8
30.12"/765	9
33.46"/850	10
36.81"/935	11
40.15"/1020	12
43.50"/1105	13
46.85"/1190	14
50.19"/1275	15
53.54"/1360	16
56.89"/1445	17
60.23"/1530	18

***If more sprockets are required contact application engineering.**

IMPORTANT

Add sprocket positions every 3.34" according to 3.34" width increments of the belt corresponding with 3.34" conveyor track pitch system.

***Don't mix** option A and option B.*

*It's **NOT** possible place the sprockets in this position.*

520

Sprockets Position for: 520FT - 520GT - 520FG - 520LBP - 520FTT

Option B

A: *1.84"/46.75* / **B:** *3.34"/85 (steps)* / **C:** *1.5"/38.25*

BOTTOM VIEW

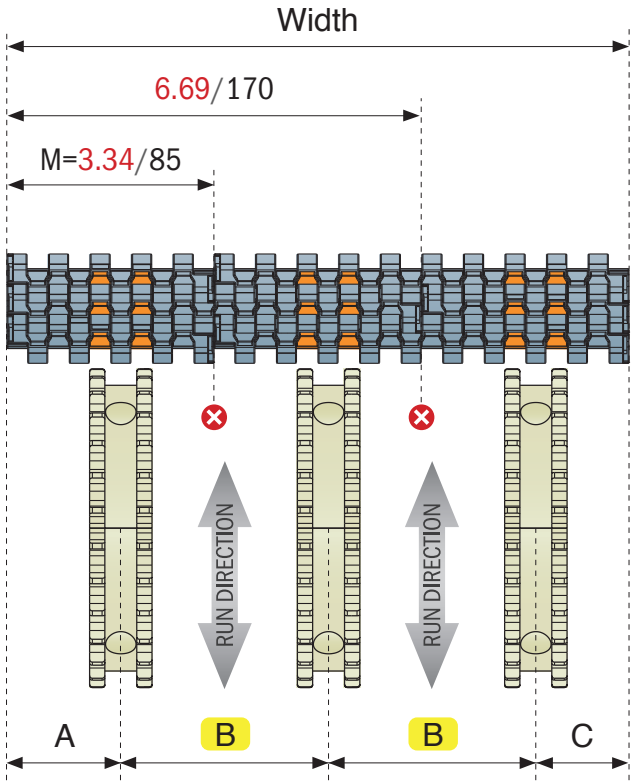

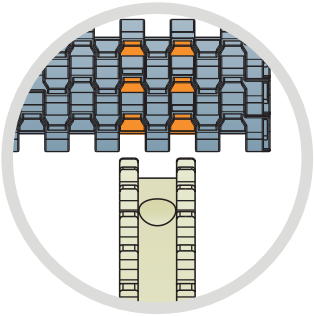

Belt width	Recommended number of sprockets*
3.34"/85	1
6.69"/170	2
10.04"/255	3
13.38"/340	4
16.73"/425	5
20.08"/510	6
23.42"/595	7
26.77"/680	8
30.12"/765	9
33.46"/850	10
36.81"/935	11
40.15"/1020	12
43.50"/1105	13
46.85"/1190	14
50.19"/1275	15
53.54"/1360	16
56.89"/1445	17
60.23"/1530	18

***If more sprockets are required contact application engineering.**

IMPORTANT

Add sprocket positions every 3.34" according to 3.34" width increments of the belt corresponding with 3.34" conveyor track pitch system.

***Don't mix** option A and option B.*

*It's **NOT** possible place the sprockets in this position.*

550

Sprockets Position for: 550FT - 550GT - 550GTsi - 550LBP

A minimum: *1.66”/42.2* / **B minimum:** *3.34”/85 (steps)*

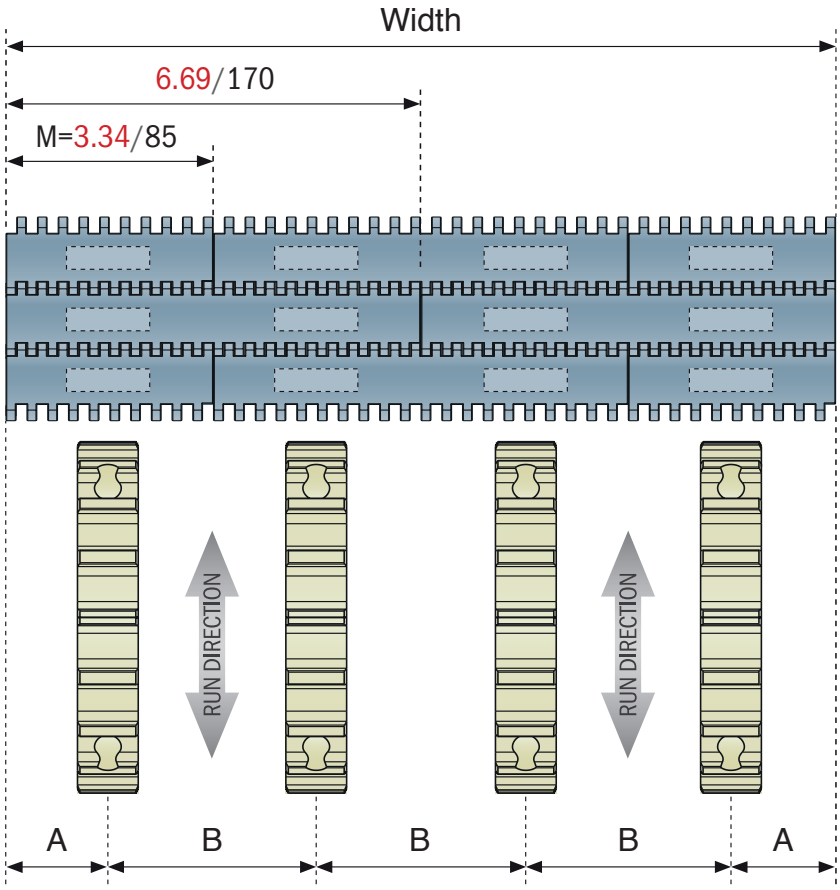

Belt width	Recommended number of sprockets*
3.34”/85	1
6.69”/170	2
10.04”/255	3
13.38”/340	4
16.73”/425	5
20.08”/510	6
23.42”/595	7
26.77”/680	8
30.12”/765	9
33.46”/850	10
36.81”/935	11
40.15”/1020	12
43.50”/1105	13
46.85”/1190	14
50.19”/1275	15
53.54”/1360	16
56.89”/1445	17
60.23”/1530	18

***If more sprockets are required contact application engineering.**

550 Sprockets Position for: 550FTT

A minimum: *1.66”/42.2* / **B minimum:** *3.34”/85 (steps)*

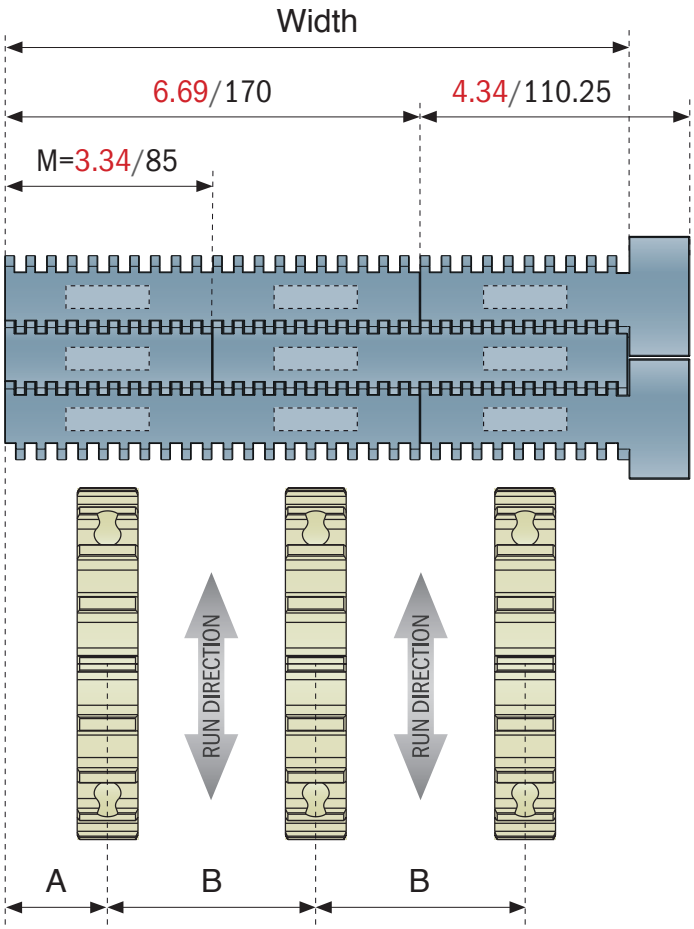

Belt width	Recommended number of sprockets*
3.34”/85	1
6.69”/170	2
10.04”/255	3
13.38”/340	4
16.73”/425	5
20.08”/510	6
23.42”/595	7
26.77”/680	8
30.12”/765	9
33.46”/850	10
36.81”/935	11
40.15”/1020	12
43.50”/1105	13
46.85”/1190	14
50.19”/1275	15
53.54”/1360	16
56.89”/1445	17
60.23”/1530	18

***If more sprockets are required contact application engineering.**

551

Sprockets Position for: 551FT - 551GT - 551GTsi - 551LBP

A minimum: *1.66”/42.5* / **B minimum:** *3.34”/85 (steps)*

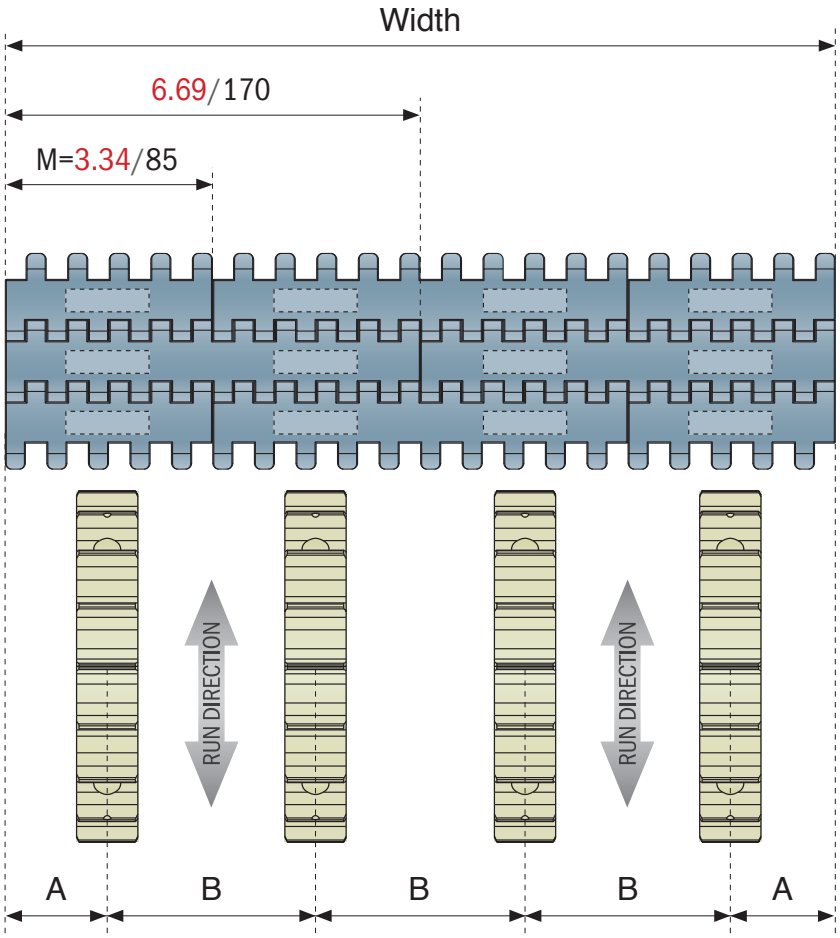

Belt width	Recommended number of sprockets*
3.34”/85	1
6.69”/170	2
10.04”/255	3
13.38”/340	4
16.73”/425	5
20.08”/510	6
23.42”/595	7
26.77”/680	8
30.12”/765	9
33.46”/850	10
36.81”/935	11
40.15”/1020	12
43.50”/1105	13
46.85”/1190	14
50.19”/1275	15
53.54”/1360	16
56.89”/1445	17
60.23”/1530	18

***If more sprockets are required contact application engineering.**

551

Sprockets Position for: 551FTT

A minimum: *1.66”/42.5* / **B minimum:** *3.34”/85 (steps)*

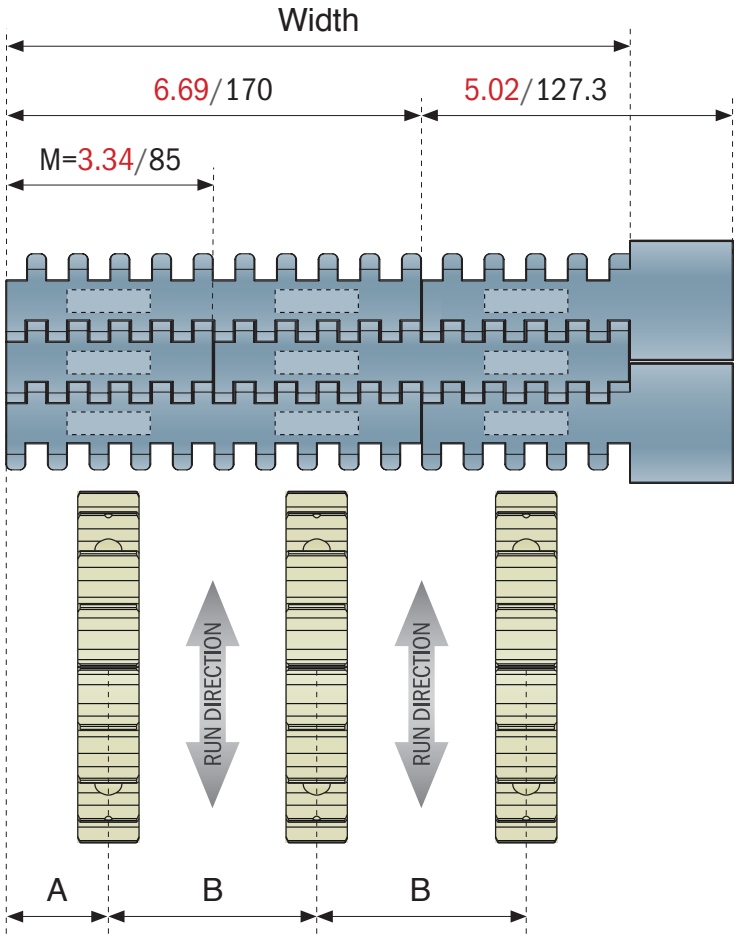

Belt width	Recommended number of sprockets*
3.34”/85	1
6.69”/170	2
10.04”/255	3
13.38”/340	4
16.73”/425	5
20.08”/510	6
23.42”/595	7
26.77”/680	8
30.12”/765	9
33.46”/850	10
36.81”/935	11
40.15”/1020	12
43.50”/1105	13
46.85”/1190	14
50.19”/1275	15
53.54”/1360	16
56.89”/1445	17
60.23”/1530	18

***If more sprockets are required contact application engineering.**

556

Sprockets Position for: 556FT - 556GT

A minimum: *1.62”/41.1* / **B minimum:** *3”/76.2*

C minimum: *1.38”/35.1*

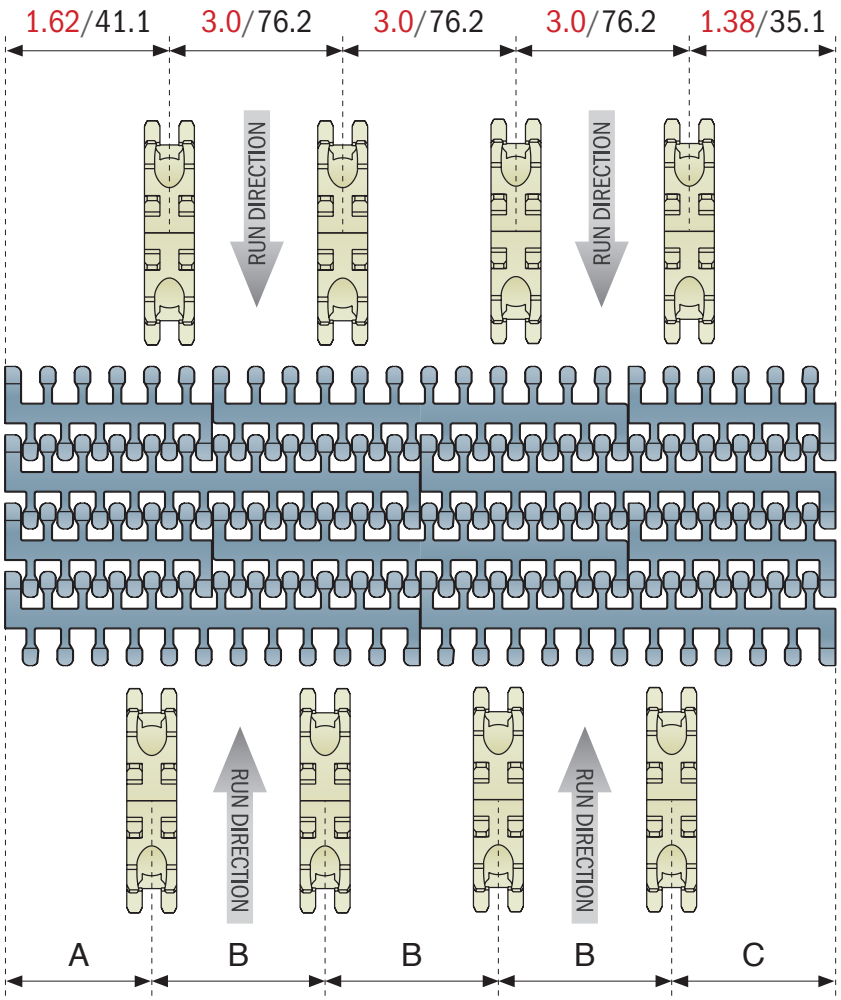

Belt width	Recommended number of sprockets*
6”/152.4	2
9”/228.6	3
12”/304.8	4
15”/381.0	5
18”/457.2	6
21”/533.4	7
24”/609.6	8

***If more sprockets are required contact application engineering.**

IMPORTANT

Sprockets teeth must press against the hinge loops, never against the module’s central bridge in the gap between the hinge loops.

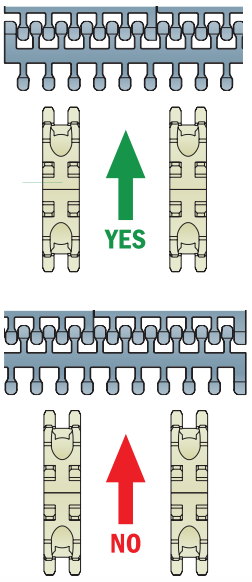

600 Sprockets Position for: 600 Standard

A1: 2.34”/59.5 / **A2:** 2”/51

B: 3.34”/85 / **C:** 2.67”/68

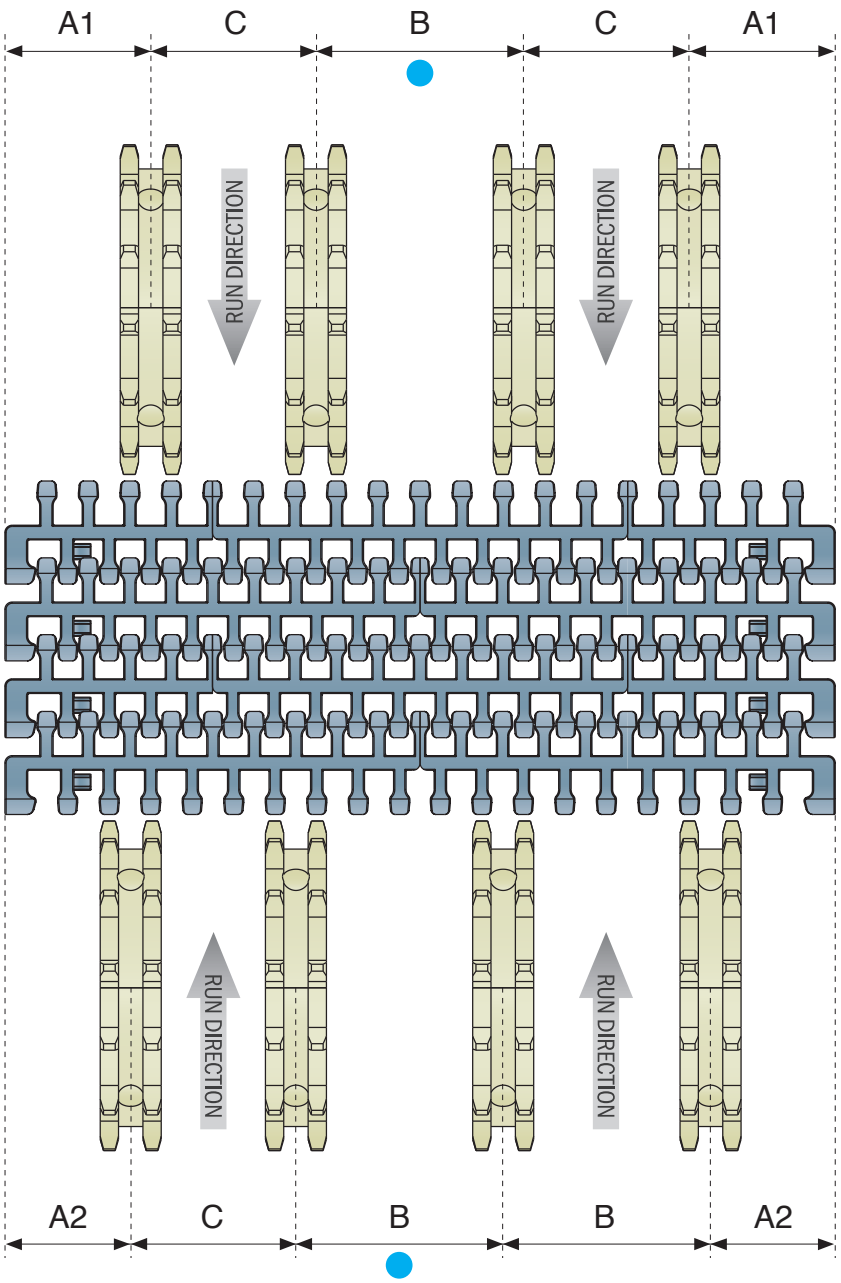

Belt width	Recommended number of sprockets*
10.04”/255	3
13.38”/340	4
16.73”/425	5
20.08”/510	6
23.42”/595	7
26.77”/680	8
30.12”/765	9
33.46”/850	10

***If more sprockets are required contact application engineering.**

IMPORTANT

Sprockets teeth must press against the hinge loops, never against the module’s central bridge in the gap between the hinge loops.

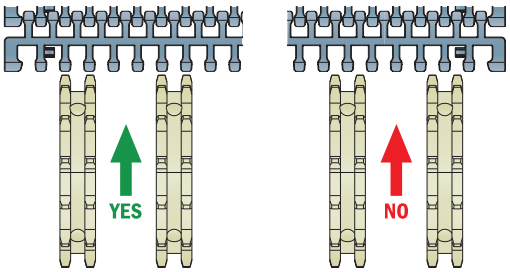

● *Add sprocket positions every 3.34” according to 3.34” width increments of the belt corresponding with 3.34” conveyor track pitch system.*

600

Sprockets Position for: 600 Heavy duty

A: 2”/51 / **B:** 3.34”/85

C: 2.34”/59.5 / **D1:** 4.01”/102 / **D2:** 3.68”/93.5

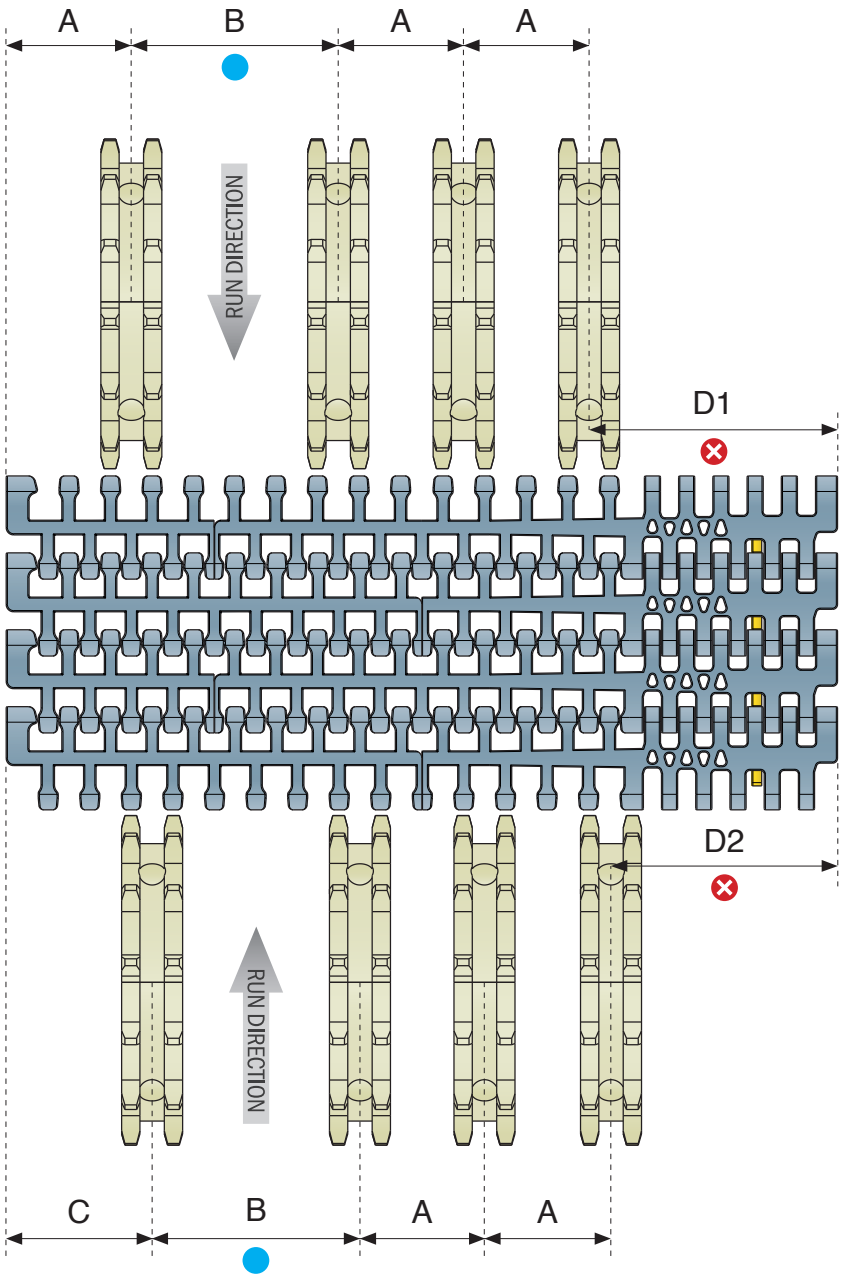

Belt width	Recommended number of sprockets*
13.38”/340	5
16.73”/425	6
20.08”/510	7
23.42”/595	8
26.77”/680	9
30.12”/765	10
33.46”/850	11

***If more sprockets are required contact application engineering.**

IMPORTANT

Sprockets teeth must press against the hinge loops, never against the module’s central bridge in the gap between the hinge loops.

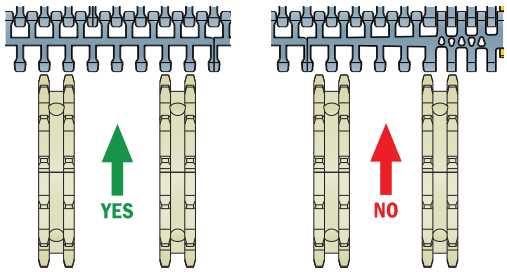

Add sprocket positions every 3.34” according to 3.34” width increments of the belt corresponding with 3.34” conveyor track pitch system.

*It’s **NOT** possible place the sprockets in this position.*

600 Sprockets Position for: 600 Small radius

with split support roller

A1: 2.34"/59.5 / **A2:** 2"/51 / **B:** 3.34"/85 / **C:** 2.67"/68

D1: 5.69"/144.5 / **D2:** 6.02"/153

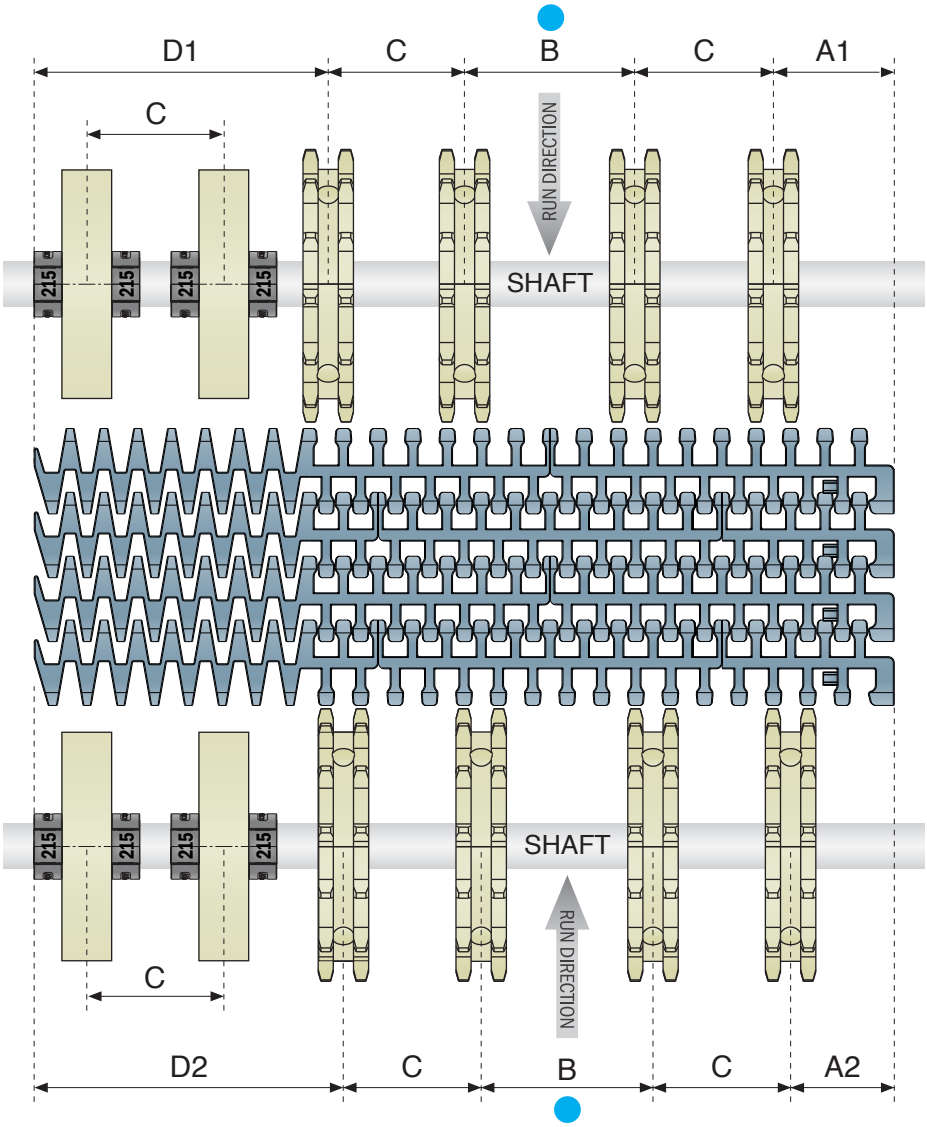

IMPORTANT

Add sprocket positions every 3.34" according to 3.34" width increments of the belt corresponding with 3.34" conveyor track pitch system.

Sprockets teeth must press against the hinge loops, never against the module's central bridge in the gap between the hinge loops.

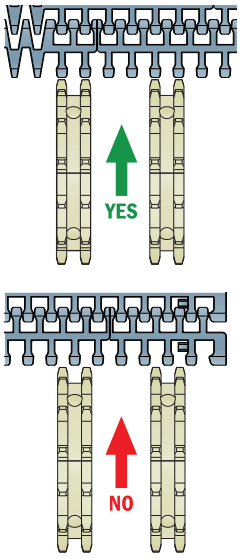

TECHNICAL RECOMMENDATION:

Fix support roller with split collars
Part 215

Split support roller

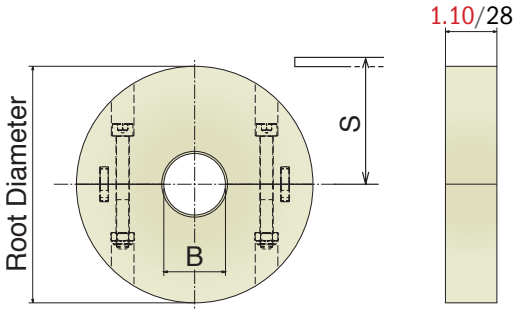

Material: *Polyamide*
Screws: Stainless steel / Nuts: Zinc plated steel

Part	Art-Nr.	Z- eq.	Bore	Root Ø in-mm
1571	157150R	10	0.71*	1.77/85,1
1571	157151R		1	
1571	157152R		1¼	
1571	157153R		1 7/16	
1571	157154R		1½	
1572	157250R	13	0.71*	4.52/115,0
1572	157251R		1	
1572	157252R		1¼	
1572	157253R		1 7/16	
1572	157254R		1½	
1573	157350R	15	0.71*	5.28/134,3
1573	157351R		1	
1573	157352R		1¼	
1573	157353R		1 7/16	
1573	157354R		1½	
1574	157450R	16	0.71*	5.75/146,8
1574	157451R		1	
1574	157452R		1¼	
1574	157453R		1 7/16	
1574	157454R		1½	

*Plain Bore

600 Sprockets Position for: 600 Heavy duty / Small radius

with split support roller

A: 2"/51 / **B:** 3.34"/85 / **C:** 2.67"/68

D1: 4.01"/102 / **D2:** 3.68"/93.5 / **E1: C:** 6.02"/153 / **E2:** 5.69"/144.5

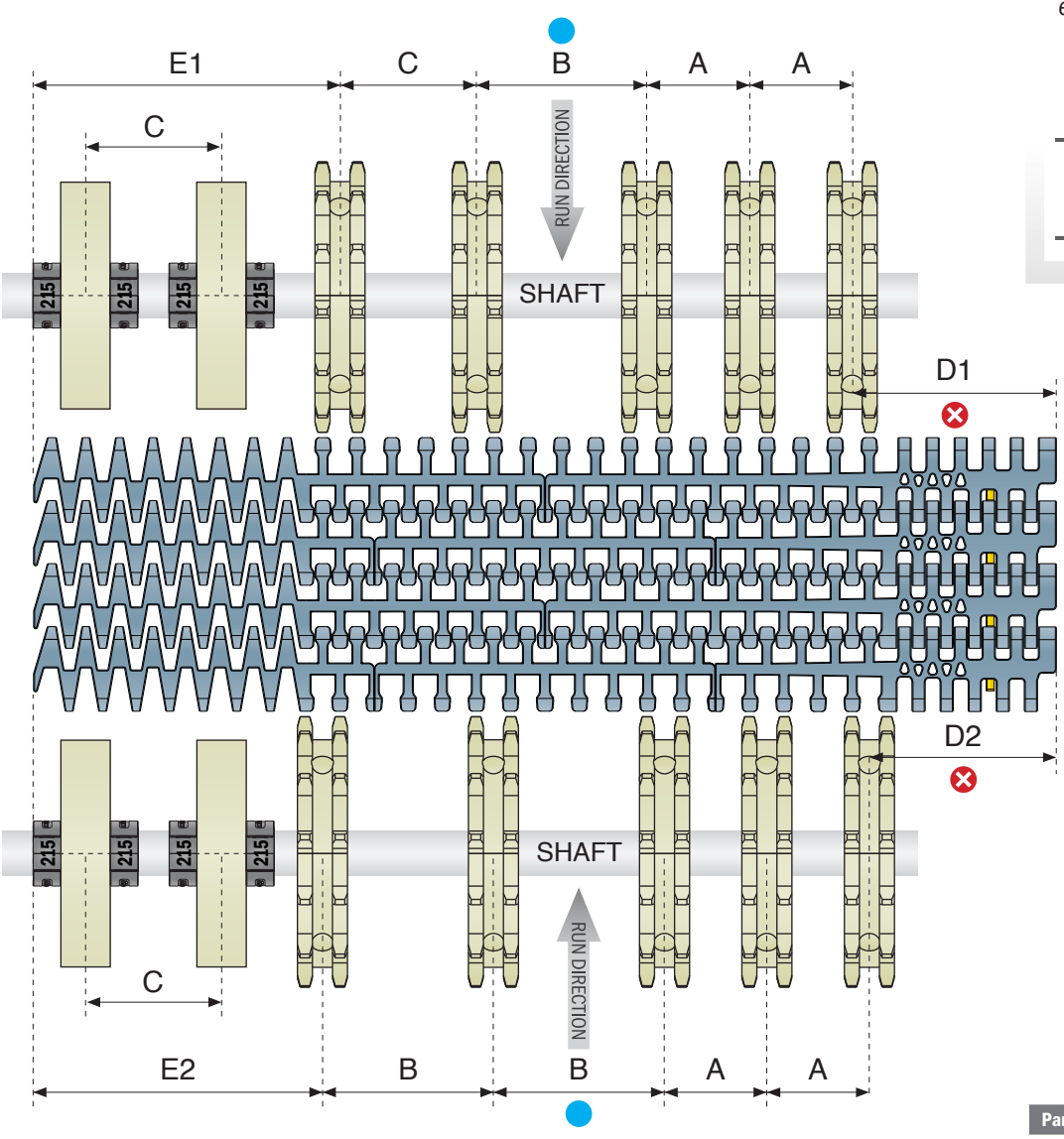

IMPORTANT

Add sprocket positions every 3.34" according to 3.34" width increments of the belt corresponding with 3.34" conveyor track pitch system.

It's **NOT** possible place the sprockets in this position.

Sprockets teeth must press against the hinge loops, never against the module's central bridge in the gap between the hinge loops.

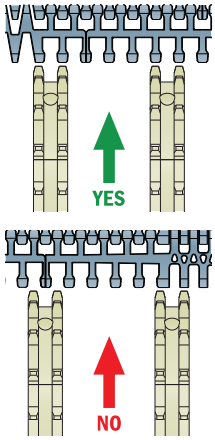

TECHNICAL RECOMMENDATION:

Fix support roller with split collars
Part 215

Split support roller

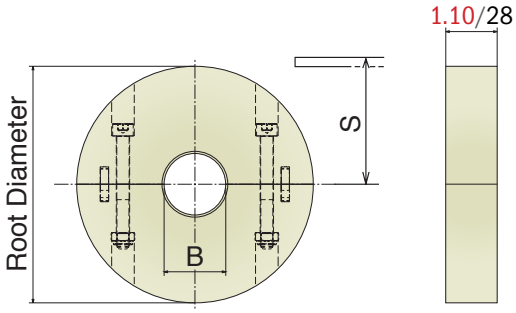

Material: Polyamide
Screws: Stainless steel / Nuts: Zinc plated steel

Part	Art-Nr.	Z- eq.	Bore	Root Ø in-mm
1571	157150R	10	0.71*	1.77/85,1
1571	157151R		1	
1571	157152R		1¼	
1571	157153R		1 7/16	
1571	157154R		1½	
1572	157250R	13	0.71*	4.52/115,0
1572	157251R		1	
1572	157252R		1¼	
1572	157253R		1 7/16	
1572	157254R		1½	
1573	157350R	15	0.71*	5.28/134,3
1573	157351R		1	
1573	157352R		1¼	
1573	157353R		1 7/16	
1573	157354R		1½	
1574	157450R	16	0.71*	5.75/146,8
1574	157451R		1	
1574	157452R		1¼	
1574	157453R		1 7/16	
1574	157454R		1½	

*Plain Bore

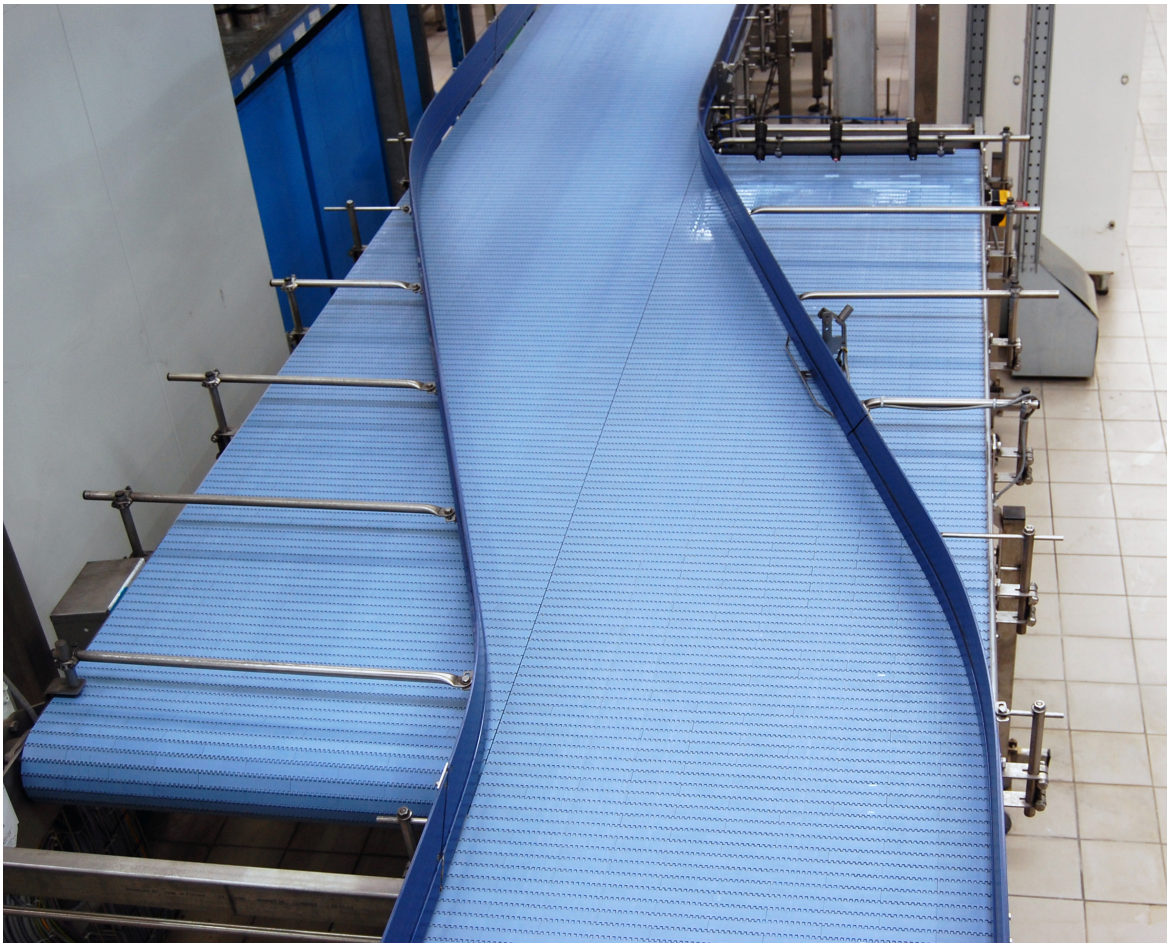

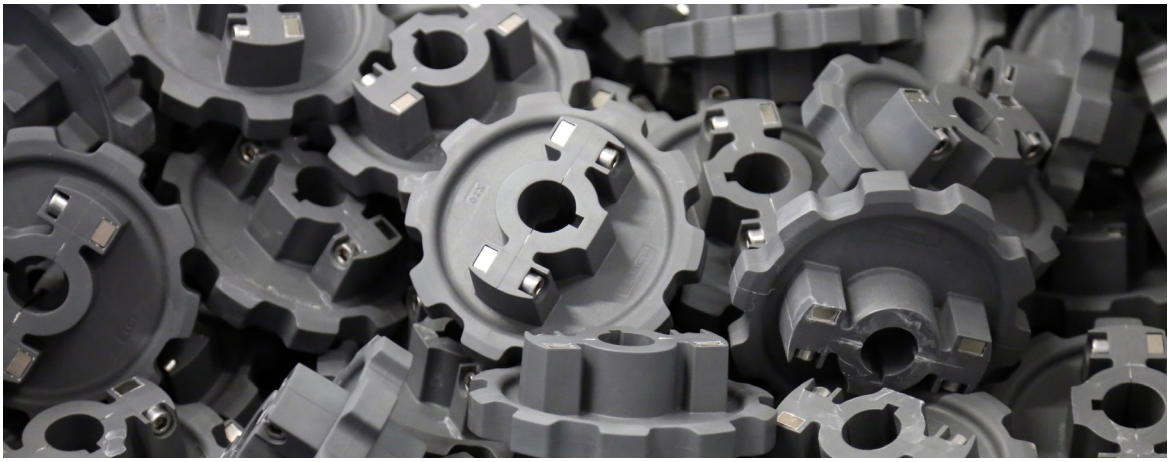

Material Chemical Resistances

Chemical Agent up to 65°C	Polyamide	Steel	Stainless Steel Aisi 304	Stainless Steel Aisi 430	LF	MK	MX	UHMW PE	PP/PPX
Acetone	G	U	G	G	G	G	A	G	G
Acetic acid (max 5%)	U	U	G	U	U	U	G	G	G
Alcohol	G	G	G	G	G	G	G	G	G
Ammonia	G	A	G	G	U	U	A	G	G
Beer	G	G	G	G	G	G	G	G	G
Benzene	G	G	G	G	G	G	U	A	G
Benzol	G	G	G	G	G	G	G	G	A
Carbon tetrachloride	G	A	A	A	G	G	/	A	U
Chocolat	A	G	G	G	G	G	G	A	G
Citric acid	A	U	G	A	A	A	G	G	G
Formic acid	U	G	G	G	G	G	A	G	/
Fresh water	G	U	G	G	G	G	G	G	G
Fruit juices	G	U	G	A	G	G	G	G	G
Hydrochloric acid (max 2%)	U	U	U	U	U	U	A	A	G
Hydrogen peroxide	U	U	G	A	U	U	/	A	/
Iodine	U	A	A	A	A	A	/	A	/
Lactic acid	G	U	G	U	G	G	G	G	G
Milk	G	G	G	G	G	G	G	G	G
Mustard	A	G	G	G	A	A	/	A	G
Nitric acid	U	U	G	A	U	U	U	A	G
Oil (vegetable or mineral)	G	G	G	G	G	G	U	G	G
Paraffin	G	G	G	G	G	G	G	G	/
Petrol	G	G	G	G	G	G	G	A	G
Phosphoric acid (max 10%)	U	U	G	U	U	U	U	G	G
Sea water	U	A	G	A	G	G	G	G	G
Soap and water	G	A	G	G	G	G	G	G	G
Sodium hydrochloride	G	U	A	U	G	G	A	G	G
Sodium hydroxide (max 25%)	G	U	G	G	U	U	U	G	/
Sodium hypochlorite	G	U	U	U	U	U	A	G	G
Soft Drinks	G	G	G	G	G	G	G	G	G
Spirits	G	G	G	G	G	G	G	G	G
Sulphide acid	U	U	U	U	U	U	G	U	G
Toluene	U	U	U	U	G	G	G	A	G
Turpentine	U	G	G	G	U	U	G	A	/
Vegetable juices	G	A	G	G	G	G	G	G	G
Vinegar	G	U	A	U	G	G	G	G	G
Whisky	G	G	G	G	G	G	G	G	G
Wine	G	G	G	G	G	G	G	G	G
Xilol	U	U	U	U	U	U	G	U	U

LEGENDA
G: *Good* / **A:** *Average* / **U:** *Unsatisfactory*

LF-LFA

Materials

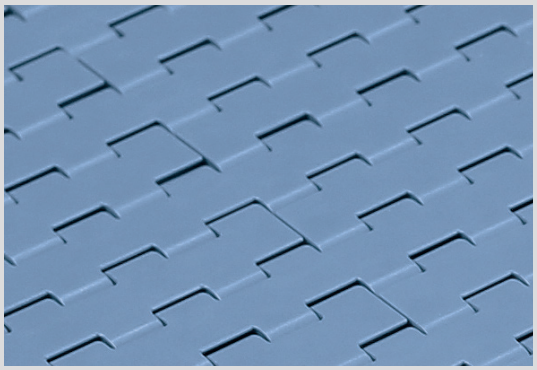

Description

Low friction Acetal Resin.
This material can be used in all common applications.
Colour: *Light Brown for Chains, RAL 5014 for Belts.*
Primary Components: *POM*

General information

Material abbreviation	Material	Chemical abbreviation	Allowable application temperatures						FDA Approval
			Fahrenheit			Celsius			
			Min	Max		Min	Max		
				Dry	Wet		Dry	Wet	
LF	Low friction acetal	POM	-40	176	149	-40	80	65	YES
LFA	Low friction acetal	POM	-40	176	149	-40	80	65	YES

Friction Factors Between Material and Product

Lubrification	Product Material					
	Paper & carton	Metal (steel)	Aluminium	Plastics & PET	Glass (returnable)	Glass (new)
Dry	0,28	0,25	0,25	0,21	0,24	0,20
Water	n.a.	0,20	0,18	0,16	0,18	0,15
W&s & Dry lube	n.a.	0,15	0,14	0,13	0,14	0,12
Oil	n.a.	0,10	n.a.	n.a.	n.a.	n.a.

Friction Factors Between Material and Product

Lubrification	Wearstrip Material		
	Stainless steel	UHMW-PE & PA	BluLub®
Dry	0,24	0,20	0,18
Water	0,19	0,16	0,14
W&s & Dry lube	0,15	0,10	0,10
Oil	0,10	0,10	0,10

Note

Material properties and performance of final product are subject to variation according to operating conditions, e.g. environmental conditions, chemicals, cleanliness.

MX

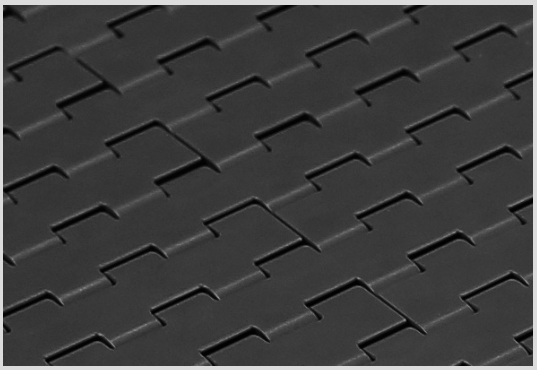

Materials

Description

Extra Performance material (PBT with additives) *with a very low coefficient of friction and improved wear resistance. Recommended for high speed and dry running applications.*
Colour: *Grey*
Primary Components: *PBT*

General information

Material abbreviation	Material	Chemical abbreviation	Allowable application temperatures						FDA Approval
			Fahrenheit			Celsius			
			Min	Max		Min	Max		
				Dry	Wet		Dry	Wet	
MX	Performance PBT	PBT	-40	248	140	-40	120	60	YES

Friction Factors Between Material and Product

Lubrification	Product Material					
	Paper & carton	Metal (steel)	Aluminium	Plastics & PET	Glass (returnable)	Glass (new)
Dry	0,20	0,18	0,15	0,13	0,14	0,12
Water	n.a.	0,16	0,14	0,12	0,13	0,12
W&s & Dry lube	n.a.	0,13	0,12	0,10	0,11	0,10
Oil	n.a.	0,10	n.a.	n.a.	n.a.	n.a.

Friction Factors Between Material and Product

Lubrification	Wearstrip Material		
	Stainless steel	UHMW-PE & PA	BluLub®
Dry	0,20	0,16	0,13
Water	0,17	0,11	0,09
W&s & Dry lube	0,14	0,09	0,08
Oil	0,10	0,10	0,10

Note

Material properties and performance of final product are subject to variation according to operating conditions, e.g. environmental conditions, chemicals, cleanliness.

MP

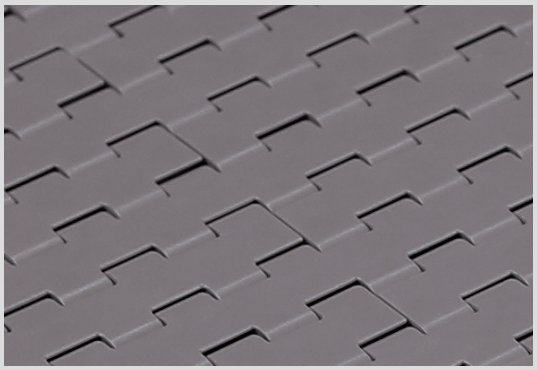

Materials

Description

High performance Material with a low coefficent of friction.
This material can increase wear life 25% over LF material.
Colour: *Brown*
Primary Components: *POM*

General information

Material abbreviation	Material	Chemical abbreviation	Allowable application temperatures						FDA Approval
			Fahrenheit			Celsius			
			Min	Max		Min	Max		
				Dry	Wet		Dry	Wet	
MP	Lucricated Acetal	POM	-40	176	149	-40	80	65	YES

Friction Factors Between Material and Product

Lubrification	Product Material					
	Paper & carton	Metal (steel)	Aluminium	Plastics & PET	Glass (returnable)	Glass (new)
Dry	0,24	0,22	0,21	0,19	0,21	0,16
Water	n.a.	0,19	0,17	0,15	0,17	0,14
W&s & Dry lube	n.a.	0,15	0,14	0,13	0,13	0,12
Oil	n.a.	0,10	n.a.	n.a.	n.a.	n.a.

Friction Factors Between Material and Product

Lubrification	Wearstrip Material		
	Stainless steel	UHMW-PE & PA	BluLub®
Dry	0,23	0,19	0,17
Water	0,19	0,15	0,14
W&s & Dry lube	0,15	0,10	0,10
Oil	0,10	0,10	0,10

Note

Material properties and performance of final product are subject to variation according to operating conditions, e.g. environmental conditions, chemicals, cleanliness.

DKM

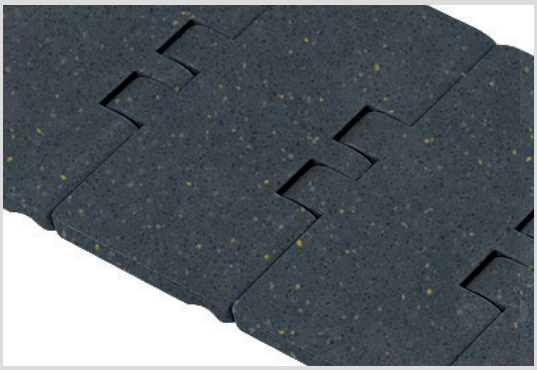

Materials

Description

Aramide reinforced acetal material
It's commonly used in dry running glass handling applications.
Colour: *Grey*
Primary Component: *POM*

General information

Material abbreviation	Material	Chemical abbreviation	Allowable application temperatures						FDA Approval
			Fahrenheit			Celsius			
			Min	Max		Min	Max		
				Dry	Wet		Dry	Wet	
DKM	Aramide reinforced acetal	POM	-40	176	149	-40	80	65	-

Friction Factors Between Material and Product

Lubrification	Product Material					
	Paper & carton	Metal (steel)	Aluminium	Plastics & PET	Glass (returnable)	Glass (new)
Dry	0,21	0,19	0,16	0,20	0,15	0,13
Water	n.a.	0,17	0,15	0,15	0,14	0,13
W&s & Dry lube	n.a.	0,14	0,13	0,13	0,12	0,11
Oil	n.a.	0,10	n.a.	n.a.	n.a.	n.a.

Friction Factors Between Material and Product

Lubrification	Wearstrip Material		
	Stainless steel	UHMW-PE & PA	BluLub®
Dry	0,21	0,19	0,17
Water	0,18	0,15	0,14
W&s & Dry lube	0,15	0,11	0,11
Oil	0,10	0,10	0,10

Note

Material properties and performance of final product are subject to variation according to operating conditions, e.g. environmental conditions, chemicals, cleanliness.

MWX

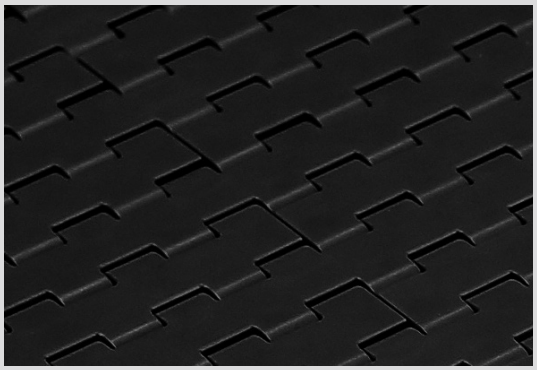

Materials

Description

MWX increases wear life

Used in applications where chain is subject to abrasives conditions such as glass sand and dirt.

Colour: *Black*

Primary Component: *Nylon (PA)*

General information

Material abbreviation	Material	Chemical abbreviation	Allowable application temperatures						FDA Approval
			Fahrenheit			Celsius			
			Min	Max		Min	Max		
				Dry	Wet		Dry	Wet	
MWX	Polyamid Composite	PA	-40	219	N.R.	-40	104	N.R.	-

Friction Factors Between Material and Product

Lubrification	Product Material					
	Paper & carton	Metal (steel)	Aluminium	Plastics & PET	Glass (returnable)	Glass (new)
Dry	0,24	0,21	0,18	0,15	0,17	0,14
Water	n.a.	0,19	0,17	0,14	0,15	0,14
W&s & Dry lube	n.a.	0,15	0,14	0,12	0,13	0,12
Oil	n.a.	0,10	n.a.	n.a.	n.a.	n.a.

Friction Factors Between Material and Product

Lubrification	Wearstrip Material		
	Stainless steel	UHMW-PE & PA	BluLub®
Dry	0,24	0,19	0,15
Water	0,20	0,13	0,11
W&s & Dry lube	0,17	0,11	0,09
Oil	0,10	0,10	0,10

Note

Material properties and performance of final product are subject to variation according to operating conditions, e.g. environmental conditions, chemicals, cleanliness.

PP

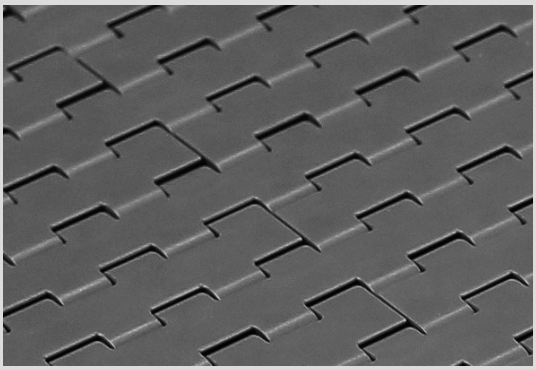

Materials

Description

Polypropylene
for better chemical resistance and higher temperatures.
Colour: *Grey*
Primary Component: *PP*

General information

Material abbreviation	Material	Chemical abbreviation	Allowable application temperatures						FDA Approval
			Fahrenheit			Celsius			
			Min	Max		Min	Max		
				Dry	Wet		Dry	Wet	
PP	Polypropylene	PP	40	220	212	4	104	100	YES

Friction Factors Between Material and Product

Lubrification	Product Material					
	Paper & carton	Metal (steel)	Aluminium	Plastics & PET	Glass (returnable)	Glass (new)
Dry	0,40	0,30	0,32	0,28	0,29	0,26
Water	n.a.	0,24	0,26	0,22	0,23	0,21
W&s & Dry lube	n.a.	0,20	0,20	0,18	0,19	0,18
Oil	n.a.	0,10	n.a.	n.a.	n.a.	n.a.

Friction Factors Between Material and Product

Lubrification	Wearstrip Material		
	Stainless steel	UHMW-PE & PA	BluLub®
Dry	0,29	0,24	0,21
Water	0,23	0,19	0,17
W&s & Dry lube	0,19	0,13	0,13
Oil	0,10	0,10	0,10

Note

Material properties and performance of final product are subject to variation according to operating conditions, e.g. environmental conditions, chemicals, cleanliness.

PPX

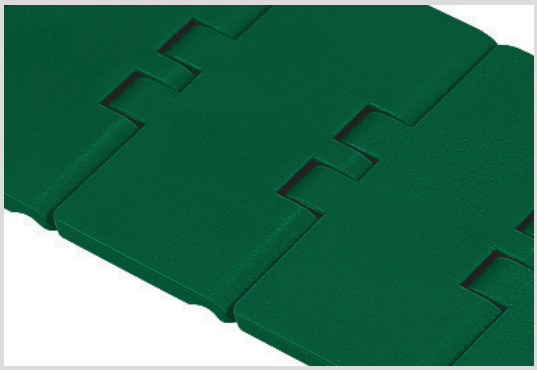

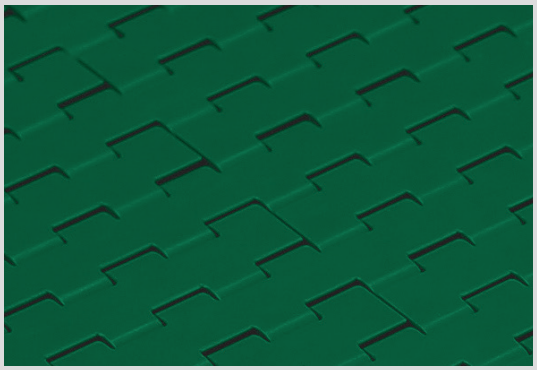

Materials

Description

Reinforced Polypropylene
for improved heat stability and chemical resistance.
Colour: *Green*
Primary Component: *PP*

General information

Material abbreviation	Material	Chemical abbreviation	Allowable application temperatures						FDA Approval
			Fahrenheit			Celsius			
			Min	Max		Min	Max		
				Dry	Wet		Dry	Wet	
PPX	Reinforced Polypropylene	PP	40	220	212	4	104	100	YES

Friction Factors Between Material and Product

Lubrification	Product Material					
	Paper & carton	Metal (steel)	Aluminium	Plastics & PET	Glass (returnable)	Glass (new)
Dry	0,40	0,30	0,32	0,28	0,29	0,26
Water	n.a.	0,24	0,26	0,22	0,23	0,21
W&s & Dry lube	n.a.	0,20	0,20	0,18	0,19	0,18
Oil	n.a.	0,10	n.a.	n.a.	n.a.	n.a.

Friction Factors Between Material and Product

Lubrification	Wearstrip Material		
	Stainless steel	UHMW-PE & PA	BluLub®
Dry	0,29	0,24	0,21
Water	0,23	0,19	0,17
W&s & Dry lube	0,19	0,13	0,13
Oil	0,10	0,10	0,10

Note

Material properties and performance of final product are subject to variation according to operating conditions, e.g. environmental conditions, chemicals, cleanliness.

AS

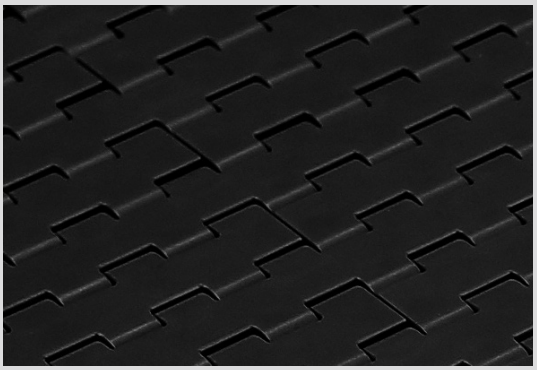

Materials

Description

AS material
eliminates the static accumulation that can happen during conveying products.
Colour: *Black*
Primary Components: *POM*

General information

Material abbreviation	Material	Chemical abbreviation	Allowable application temperatures						FDA Approval
			Fahrenheit			Celsius			
			Min	Max		Min	Max		
				Dry	Wet		Dry	Wet	
AS	Antistatic Acetal	POM	-4	180	N.R.	-18	82	N.R.	YES

Friction Factors Between Material and Product

Lubrification	Product Material					
	Paper & carton	Metal (steel)	Aluminium	Plastics & PET	Glass (returnable)	Glass (new)
Dry	0,35	0,28	0,29	0,25	0,27	0,24
Water	n.a.	n.a.	n.a.	n.a.	n.a.	n.a.
W&s & Dry lube	n.a.	n.a.	n.a.	n.a.	n.a.	n.a.
Oil	n.a.	n.a.	n.a.	n.a.	n.a.	n.a.

Friction Factors Between Material and Product

Lubrification	Wearstrip Material		
	Stainless steel	UHMW-PE & PA	BluLub®
Dry	0,27	0,22	0,20
Water	n.a.	n.a.	n.a.
W&s & Dry lube	n.a.	n.a.	n.a.
Oil	n.a.	n.a.	n.a.

Note

Material properties and performance of final product are subject to variation according to operating conditions, e.g. environmental conditions, chemicals, cleanliness.

SS

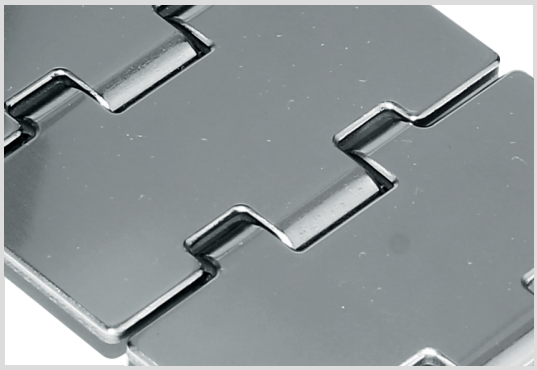

Materials

Description

Ferritic Stainless Steel (1.4016)
for standard applications.

General information

Material abbreviation	Material	Chemical abbreviation	Allowable application temperatures						FDA Approval
			Fahrenheit			Celsius			
			Min	Max		Min	Max		
				Dry	Wet		Dry	Wet	
SS	Standard Stainless Steel	1.4016	-22	750	265	-30	400	130	-

Friction Factors Between Material and Product

Lubrification	Product Material					
	Paper & carton	Metal (steel)	Aluminium	Plastics & PET	Glass (returnable)	Glass (new)
Dry	0,40	0,50	0,35	0,30	0,47	0,35
Water	n.a.	0,35	0,30	0,25	0,31	0,30
W&s & Dry lube	n.a.	0,20	0,15	0,15	0,21	0,15
Oil	n.a.	0,20	n.a.	n.a.	n.a.	n.a.

Friction Factors Between Material and Product

Lubrification	Wearstrip Material		
	Stainless steel	UHMW-PE & PA	BluLub®
Dry	n.a.	0,35	0,32
Water	0,40	0,27	0,24
W&s & Dry lube	0,20	0,18	0,15
Oil	0,20	0,18	0,15

Note

Material properties and performance of final product are subject to variation according to operating conditions, e.g. environmental conditions, chemicals, cleanliness.

SSE

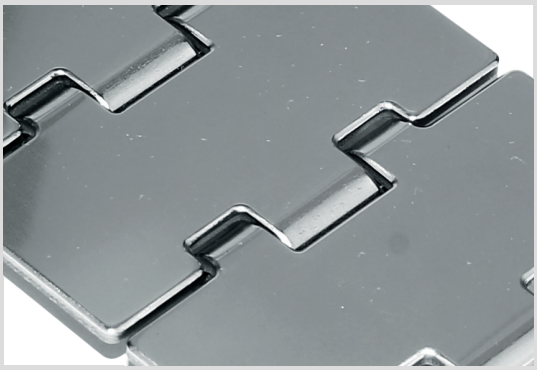

Materials

Description

Specially treated Ferritic Stainless Steel (1.4589)
for improved working-load and less friction.

General information

Material abbreviation	Material	Chemical abbreviation	Allowable application temperatures						FDA Approval
			Fahrenheit			Celsius			
			Min	Max		Min	Max		
				Dry	Wet		Dry	Wet	
SSE	Special Stainless Steel	1.4589	-22	750	265	-30	400	130	-

Friction Factors Between Material and Product

Lubrification	Product Material					
	Paper & carton	Metal (steel)	Aluminium	Plastics & PET	Glass (returnable)	Glass (new)
Dry	0,38	0,48	0,33	0,29	0,45	0,33
Water	n.a.	0,33	0,29	0,24	0,29	0,29
W&s & Dry lube	n.a.	0,19	0,14	0,14	0,20	0,14
Oil	n.a.	0,19	n.a.	n.a.	n.a.	n.a.

Friction Factors Between Material and Product

Lubrification	Wearstrip Material		
	Stainless steel	UHMW-PE & PA	BluLub®
Dry	n.a.	0,33	0,30
Water	0,38	0,26	0,23
W&s & Dry lube	0,19	0,17	0,14
Oil	0,19	0,17	0,14

Note

Material properties and performance of final product are subject to variation according to operating conditions, e.g. environmental conditions, chemicals, cleanliness.

SSM

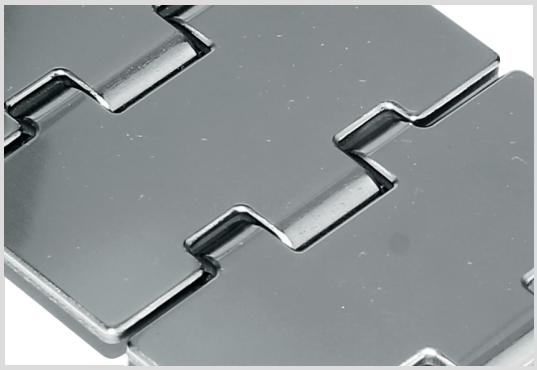

Materials

Description

Specially treated Ferritic SS (1.4589)
with optimized surface finish for superior sliding properties. For High-Speed and more critical applications.

General information

Material abbreviation	Material	Chemical abbreviation	Allowable application temperatures						FDA Approval
			Fahrenheit			Celsius			
			Min	Max		Min	Max		
				Dry	Wet		Dry	Wet	
SSM	Max Speed Stainless Steel	1.4589	-22	750	265	-30	400	130	-

Friction Factors Between Material and Product

Lubrification	Product Material					
	Paper & carton	Metal (steel)	Aluminium	Plastics & PET	Glass (returnable)	Glass (new)
Dry	0,34	0,43	0,30	0,26	0,40	0,30
Water	n.a.	0,30	0,26	0,21	0,26	0,26
W&s & Dry lube	n.a.	0,17	0,13	0,13	0,18	0,13
Oil	n.a.	0,17	n.a.	n.a.	n.a.	n.a.

Friction Factors Between Material and Product

Lubrification	Wearstrip Material		
	Stainless steel	UHMW-PE & PA	BluLub®
Dry	n.a.	0,32	0,29
Water	0,36	0,24	0,22
W&s & Dry lube	0,18	0,16	0,14
Oil	0,18	0,16	0,14

Note

Material properties and performance of final product are subject to variation according to operating conditions, e.g. environmental conditions, chemicals, cleanliness.

SSA

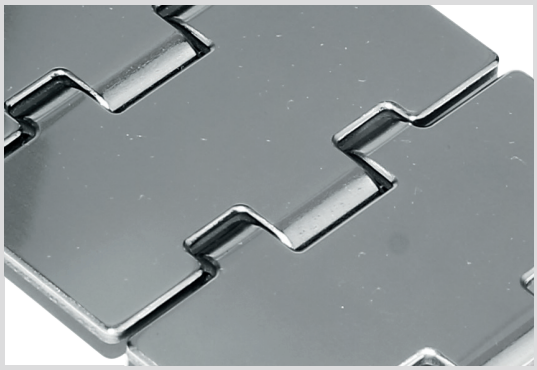

Materials

Description

Austenitic Stainless Steel with high resistance to corrosion and acid (AISI 304)
for improved working-load and less friction.

General information

Material abbreviation	Material	Chemical abbreviation	Allowable application temperatures						FDA Approval
			Fahrenheit			Celsius			
			Min	Max		Min	Max		
				Dry	Wet		Dry	Wet	
SSA	Austenitic Stainless Steel	AISI 304	-22	750	265	-30	400	130	-

Friction Factors Between Material and Product

Lubrification	Product Material					
	Paper & carton	Metal (steel)	Aluminium	Plastics & PET	Glass (returnable)	Glass (new)
Dry	0,43	0,38	0,34	0,30	0,33	0,33
Water	n.a.	0,30	0,27	0,21	0,29	0,29
W&s & Dry lube	n.a.	0,15	0,14	0,14	0,15	0,15
Oil	n.a.	n.a.	n.a.	n.a.	n.a.	n.a.

Friction Factors Between Material and Product

Lubrification	Wearstrip Material		
	Stainless steel	UHMW-PE & PA	BluLub®
Dry	0,40	0,30	0,30
Water	0,35	0,22	0,22
W&s & Dry lube	0,15	0,15	0,15
Oil	0,15	0,10	0,10

Note

Material properties and performance of final product are subject to variation according to operating conditions, e.g. environmental conditions, chemicals, cleanliness.

100003-30	217
10010102	9
10010103	9
10010104	9
10010105	9
10010106	9
10010107	9
10010114	9
10010202	9
10010203	9
10010204	9
10010205	9
10010206	9
10010207	9
10010214	9
10010216	9
10010302	8
10010303	8
100103-30	217
10010402	9
10010403	9
10010404	9
10010405	9
10010406	9
10010407	9
10020102	20
10020105	20
10020107	20
10020202	20
100203-30	217
10030107	10
10030207	10
100303-30	217
10030407	10
10040107	22
10040207	22
100403-30	217
10050107	10
10060107	23
100603-30	218
10070100	11
10070101	11
10070102	11
10070104	11
10070108	11
10070109	11
10070114	11
100703	219
100703B	219
10070400	11
10070401	11
10070408	11
10070409	11
10070414	11
10080102	13
10080103	13
10080105	13
10080107	13
10080202	13
10080203	13
10080205	13
10080207	13
10080302	12
10080303	12
100803	219
100803B	219
10090102	25
10090107	25
100903-30	219
10100102	14
10100105	14
10100107	14
10100202	14
101003-30	220
10100402	14
10100405	14
10100407	14
10101	200
10102	200
101103-30	220
101103-60	220
10120102	15
10120104	15
10120105	15
10120107	15
101203-30	220
10120402	15
10120405	15
10120407	15
101303	220
10140102	16
10140103	16
10140104	16
10140105	16
10140107	16
10140202	16
10140203	16
10140205	16
10140207	16
101403	203
101403C	203
10140402	16
10140403	16
10140405	16
10140407	16
10150102	24
10150107	24
101503	203
101503C	203
10160102	17
10160104	17
10160105	17
10160107	17
101603	203
101603-30	203
101603C	203
10160402	17
10160404	17
10160405	17
10160407	17
101703	203
101703-30	203
101703C	203
10180107	18
101803	204
101803C	204
101903	204
101903C	204
10200102	21
102003	204
102003C	204
10201	200
10202	200
10210117	19
10210118	19
102103	205
102103-30	205
102103-75	205
102103C	205
102203	205
102203-30	205
102203C	205
102303	205
102303C	205
102402	205
102403	205
102403-30	205
102403C	205
102503	206
102503-30	206
102503C	206
102603	206
102603C	206
102703	206
102703C	206
102803	206
102803C	206
102903	207
102903C	207
10299B	200
103003	207
103003C	207
10300B-30	201
10301	201
10302	201
10303	201
103103	207
103103C	207
103203	207
103203C	207
103303	208
103303C	208
103403	208
103403C	208
103503	208
103503C	208
103600B	228
103700B	228
103803	202
103903	244
103903C	244
103913	244
103913C	244
104003	221
104003C	221
10401	201
10402	201
10403	201
104103	232
104103C	232
104203	232
104203C	232
104303	232
104303C	232
104403	233
104403C	233
104503	233
104503C	233
104602C	206
104603C	206
104700BC	167
10501	209
10502	209
10503	209
10504	209
10505	209
10506	209
10507	209
10508	209
10509	209
10510	209
105203	216
105203C	216
105303	233
105303C	233
105403	233
105403C	233
105501	236
105501C	236
105660BC	242
105664C	242
105670BC	242
105674C	242
105760BC	242
105764C	242
105801	202
105801C	202
105802	202
105802C	202
105901	214
105901B	214
105901BC	214
105901C	214
105902	214
105902C	214
10592	209
10594	209
10595	209
10596	209
10597	209
106001	215
106001C	215
106002	215
106002C	215
10601	209
10602	209
106104BC	243
106104C	243
106200B	229
106301C	237
106401C	237
106500BC	239
106504C	239
106701C	222
106763	222
10701	209
10702	209
10801	209
10801C	209
10802	209
10802C	209
10901	210
10901B	210
10901B-30	210
10901BC	210
10901C	210
10902	210
10902C	210
10903	210
10903C	210
11001	210
11001C	210
11002	210
11002C	210
11010102	30
11010103	30
11010104	30
11010105	30
11010106	30
11010107	30
11010114	30
11010302	30
11010303	30
11010304	30
11010305	30
11010306	30
11010307	30
11010314	30
11011302	30
11011303	30
11011304	30
11011305	30
11011306	30
11011307	30
11011314	30
11011602	31
11011603	31
11011604	31
11011605	31
11011606	31
11011607	31
11011614	31
11011702	31
11011703	31
11011704	31
11011705	31
11011706	31
11011707	31

11011714	31
11020102	33
11020103	33
11020302	33
11020303	33
11021302	33
11021303	33
11021602	33
11021603	33
11021702	33
11021703	33
11030102	34
11030105	34
11030107	34
11030302	34
11030305	34
11030307	34
11031302	34
11031305	34
11031307	34
11031602	34
11031605	34
11031607	34
11031702	34
11031705	34
11031707	34
11040107	35
11040108	35
11040109	35
11040307	35
11040308	35
11040309	35
11041307	35
11041308	35
11041309	35
11041607	35
11041608	35
11041609	35
11041707	35
11041708	35
11041709	35
11050107	36
11050108	36
11050109	36
11050307	36
11050308	36
11050309	36
11060107	37
11060108	37
11060109	37
11070107	38
11070108	38
11070109	38
11070307	38
11070308	38
11070309	38
11071307	38
11071308	38
11071309	38
11071607	38
11071608	38
11071609	38
11071707	38
11071708	38
11071709	38
11080107	39
11080108	39
11080109	39
11080307	39
11080308	39
11080309	39
11090107	40
11090108	40
11090109	40
11100102	46
11100103	46
11100105	46
11100302	46
11100303	46
11100305	46
11101302	46
11101303	46
11101305	46
11101602	46
11101603	46
11101605	46
11101702	46
11101703	46
11101705	46
11101	214
11101-60	214
11101B	214
11101BC	214
11101C	214
11102	214
11102-60	214
11102C	214
11110102	47
11110103	47
11110105	47
11110302	47
11110303	47
11110305	47
11111302	47
11111303	47
11111305	47
11111602	47
11111603	47
11111605	47
11111702	47
11111703	47
11111705	47
11120102	49
11120104	49
11120105	49
11120302	49
11120304	49
11120305	49
11130107	51
11130108	51
11130109	51
11130307	51
11130308	51
11130309	51
11131307	51
11131308	51
11131309	51
11131607	51
11131608	51
11131609	51
11131707	51
11131708	51
11131709	51
11140105	54
11140106	54
11140107	54
11140108	54
11140109	54
11140305	54
11140306	54
11140307	54
11140308	54
11140309	54
11141305	54
11141306	54
11141307	54
11141308	54
11141309	54
11141605	54
11141606	54
11141607	54
11141608	54
11141609	54
11141705	54
11141706	54
11141707	54
11141708	54
11141709	54
11150107	52
11150108	52
11150109	52
11150307	52
11150308	52
11150309	52
11160107	55
11160108	55
11160109	55
11160307	55
11160308	55
11160309	55
11170107	53
11170108	53
11170109	53
11180105	56
11180107	56
11180108	56
11180109	56
11190102	41
11190105	41
11190302	41
11190305	41
11191302	41
11191305	41
11191602	41
11191605	41
11191702	41
11191705	41
11200102	59
11200105	59
11200202	59
11200205	59
11200302	59
11200305	59
11201	211
11201C	211
11202	211
11202C	211
11210102	59
11210105	59
11210202	59
11210205	59
11210302	59
11210305	59
11220300	70
11220310	71
11220400	70
11220410	71
11230300	70
11230310	71
11230400	70
11230410	71
11240102	42
11240105	42
11240302	42
11240305	42
11241302	42
11241305	42
11241602	42
11241605	42
11241702	42
11241705	42
11250102	43
11250105	43
11250302	43
11250305	43
11251302	43
11251305	43
11251602	43
11251605	43
11251702	43
11251705	43
11260102	50
11260105	50
11260302	50
11260305	50
11280102	60
11280105	60
11280202	60
11280205	60
11280302	60
11280305	60
11290102	60
11290105	60
11290202	60
11290205	60
11290302	60
11290305	60
11300300	72
11300400	72
11301	245
11302	245
11310300	72
11310400	72
11320102	59
11320105	59
11320202	59
11320205	59
11320302	59
11320305	59
11330102	59
11330105	59
11330202	59
11330205	59
11330302	59
11330305	59
11340102	60
11340105	60
11340202	60
11340205	60
11340302	60
11340305	60
11350102	60
11350105	60
11350202	60
11350205	60
11350302	60
11350305	60
11360300	73
11360400	73
11360400-FA	74
11360400-FB	74
11360400-FC	74
11360400-FD	74
11400117	67
11400119	67
11400317	67
11400319	67
11401	245
11402	245
11410117	67
11410119	67
11410317	67
11410319	67
11501	246
11502	246
11510103	172
11510105	172
11520103	174
11520105	174
11530103	175
11530105	175
11540103	173
11540105	173
11550102	32
11550105	32
11550302	32
11550305	32
11560102	48

11570102	48
11570105	48
11590102	57
11590105	57
11590106	57
11590107	57
11590108	57
11590109	57
11590302	57
11590305	57
11590306	57
11590307	57
11590308	57
11590309	57
11600102	57
11600105	57
11600106	57
11600107	57
11600108	57
11600109	57
11600302	57
11600305	57
11600306	57
11600307	57
11600308	57
11600309	57
11601	246
11602	246
11610107	58
11610108	58
11610109	58
11610307	58
11610308	58
11610309	58
11620107	58
11620108	58
11620109	58
11620307	58
11620308	58
11620309	58
11630102	32
11630105	32
11640110	68
11640310	68
11650110	69
11650310	69
11660102	48
11660105	48
11670107	64
11670307	64
11690108	63
11690308	63
11700119	44
11700120	44
11700121	44
11701	236
11701C	236
11702	236
11702C	236
11703	236
11703C	236
11710119	45
11710120	45
11710121	45
11720300	75
11720400	75
11730300	75
11730400	75
11760107	64
11760307	64
11770107	64
11770307	64
11780108	63
11780308	63
11790108	63
11790308	63
11800102	65
11801	213
11801C	213
11802	213
11802C	213
11810102	65
11820102	66
11830102	61
11830105	61
11830202	61
11830205	61
11830302	61
11830305	61
11840102	61
11840105	61
11840202	61
11840205	61
11840302	61
11840305	61
11850102	61
11850105	61
11850202	61
11850205	61
11850302	61
11850305	61
11860102	61
11860105	61
11860202	61
11860205	61
11860302	61
11860305	61
11870106	62
11870107	62
11870206	62
11870207	62
11870306	62
11870307	62
11880106	62
11880107	62
11880206	62
11880207	62
11880306	62
11880307	62
11890106	62
11890107	62
11890206	62
11890207	62
11890306	62
11890307	62
11900103	176
11900105	176
11901	222
11901B	222
11901BC	222
11901C	222
11963	222
11963B	222
11967	222
11967B	222
12001	222
12001B	222
12001BC	222
12001C	222
12063	222
12063B	222
12067	222
12067B	222
12101	222
12101B	222
12101BC	222
12101C	222
12163	222
12163B	222
12167	222
12167B	222
12201C	223
12263	223
12301C	223
12363	223
12401C	224
12463	224
12501C	225
12563	225
13001	226
13001C	226
13002C	226
13101	226
13101B	226
13102	226
13301	211
13301C	211
13302	211
13302C	211
13303	211
13303C	211
13304	211
13304C	211
13305B	211
13305BC	211
13306B	211
13306BC	211
13401	231
13401C	231
1348 Series	169
13501	234
13501C	234
13502	234
13502C	234
13601	234
13601C	234
13602	234
13602C	234
13701	235
13701B	235
13701BC	235
13701C	235
13702	235
13702C	235
13711	235
13711B	235
13711BC	235
13711C	235
13720	235
14001C	223
14063	223
14101C	224
14163	224
14201C	224
14263	224
14301C	224
14363	224
14401C	225
14463	225
14503C	225
14563	225
14601C	223
14663	223
14701	211
14701C	211
14801	211
14801B	211
14801BC	211
14801C	211
14802	211
14802C	211
14803C	211
14950	213
14950C	213
14952	213
14952C	213
15001	202
15002	202
150101Y	180
150102Y	180
150103Y	180
150104Y	180
150106Y	180
150107Y	180
150108Y	180
150150	180
150151Y	180
150152Y	180
150153Y	180
150154Y	180
150201Y	180
150202Y	180
150203Y	180
150204Y	180
150206Y	180
150207Y	180
150208Y	180
150250	180
150251Y	180
150252Y	180
150253Y	180
150254Y	180
150301Y	180
150302Y	180
150303Y	180
150304Y	180
150306Y	180
150307Y	180
150308Y	180
150350	180
150351Y	180
150352Y	180
150353Y	180
150354Y	180
150401Y	180
150402Y	180
150403Y	180
150404Y	180
150406Y	180
150407Y	180
150408Y	180
150450	180
150451Y	180
150452Y	180
150453Y	180
150454Y	180
150501Y	181
150502Y	181
150503Y	181
150504Y	181
150506Y	181
150507Y	181
150508Y	181
150551Y	181
150552Y	181
150553Y	181
150554Y	181
150601Y	181
150602Y	181
150603Y	181
150604Y	181
150606Y	181
150607Y	181
150608Y	181
150651Y	181
150652Y	181
150653Y	181
150654Y	181
150701Y	181
150702Y	181
150703Y	181
150704Y	181
150706Y	181
150707Y	181
150708Y	181
150751Y	181
150752Y	181
150753Y	181

150754Y	181
15101	227
15102	227
15103	227
15104	227
15105	227
151101Y	183
151102Y	183
151103Y	183
151104Y	183
151106Y	183
151107Y	183
151108Y	183
151150	183
151151Y	183
151152Y	183
151153Y	183
151154Y	183
151201Y	183
151202Y	183
151203Y	183
151204Y	183
151206Y	183
151207Y	183
151208Y	183
151250	183
151251Y	183
151252Y	183
151253Y	183
151254Y	183
151301Y	183
151302Y	183
151303Y	183
151304Y	183
151306Y	183
151307Y	183
151308Y	183
151350	183
151351Y	183
151352Y	183
151353Y	183
151354Y	183
151401Y	183
151402Y	183
151403Y	183
151404Y	183
151406Y	183
151407Y	183
151408Y	183
151450	183
151451Y	183
151452Y	183
151453Y	183
151454Y	183
15201C	222
152101Y	184
152102Y	184
152103Y	184
152104Y	184
152106Y	184
152107Y	184
152108Y	184
152150	184
152151Y	184
152152Y	184
152153Y	184
152154Y	184
152201Y	184
152202Y	184
152203Y	184
152204Y	184
152206Y	184
152207Y	184
152208Y	184
152250	184
152251Y	184
152252Y	184
152253Y	184
152254Y	184
152301Y	184
152302Y	184
152303Y	184
152304Y	184
152306Y	184
152307Y	184
152308Y	184
152350	184
152351Y	184
152352Y	184
152353Y	184
152353Y	186
152354Y	184
152401Y	184
152402Y	184
152403Y	184
152404Y	184
152406Y	184
152407Y	184
152408Y	184
152450	184
152451Y	184
152452Y	184
152453Y	184
152454Y	184
152501Y	185
152502Y	185
152503Y	185
152504Y	185
152506Y	185
152507Y	185
152508Y	185
152551Y	185
152552Y	185
152553Y	185
152554Y	185
152601Y	185
152602Y	185
152603Y	185
152604Y	185
152606Y	185
152607Y	185
152608Y	185
15263	222
152651Y	185
152652Y	185
152653Y	185
152654Y	185
152701Y	185
152702Y	185
152703Y	185
152704Y	185
152706Y	185
152707Y	185
152708Y	185
152751Y	185
152752Y	185
152753Y	185
152754Y	185
152801Y	185
152802Y	185
152803Y	185
152804Y	185
152806Y	185
152807Y	185
152808Y	185
152851Y	185
152852Y	185
152853Y	185
152854Y	185
15300	218
15300-30	218
15300C	218
15302	218
15302C	218
15303	218
15303-30	218
153101Y	186
153102Y	186
153103Y	186
153104Y	186
153106Y	186
153107Y	186
153108Y	186
153150	186
153151Y	186
153152Y	186
153153Y	186
153154Y	186
153201Y	186
153202Y	186
153203Y	186
153204Y	186
153206Y	186
153207Y	186
153208Y	186
153250	186
153251Y	186
153252Y	186
153253Y	186
153254Y	186
153301Y	186
153302Y	186
153303Y	186
153304Y	186
153306Y	186
153307Y	186
153308Y	186
153350	186
153351Y	186
153352Y	186
153354Y	186
153401Y	186
153402Y	186
153403Y	186
153404Y	186
153406Y	186
153407Y	186
153408Y	186
153450	186
153451Y	186
153452Y	186
153453Y	186
153454Y	186
153501Y	187
153502Y	187
153503Y	187
153504Y	187
153506Y	187
153507Y	187
153508Y	187
153551Y	187
153552Y	187
153553Y	187
153554Y	187
153601Y	187
153602Y	187
153603Y	187
153604Y	187
153606Y	187
153607Y	187
153608Y	187
153651Y	187
153652Y	187
153653Y	187
153654Y	187
153701Y	187
153702Y	187
153703Y	187
153704Y	187
153706Y	187
153707Y	187
153708Y	187
153751Y	187
153752Y	187
153753Y	187
153754Y	187
153801Y	187
153802Y	187
153803Y	187
153804Y	187
153806Y	187
153807Y	187
153808Y	187
153851Y	187
153852Y	187
153853Y	187
153854Y	187
15401	231
15401B	231
15401BC	231
15401C	231
154101Y	190
154102Y	190
154103Y	190
154104Y	190
154150	190
154151Y	190
154152Y	190
154153Y	190
154154Y	190
154201Y	190
154202Y	190
154203Y	190
154204Y	190
154250	190
154251Y	190
154252Y	190
154253Y	190
154254Y	190
154301Y	190
154302Y	190
154303Y	190
154304Y	190
154350	190
154351Y	190
154352Y	190
154353Y	190
154354Y	190
154501Y	191
154502Y	191
154503Y	191
154504Y	191
154506Y	191
154507Y	191
154508Y	191
154551Y	191
154552Y	191
154553Y	191
154554Y	191
154601Y	191
154602Y	191
154603Y	191
154604Y	191
154606Y	191
154607Y	191
154608Y	191
154651Y	191
154652Y	191
154653Y	191
154654Y	191
154701Y	191
154702Y	191
154703Y	191
154704Y	191
154706Y	191
154707Y	191
154708Y	191
154751Y	191

154752Y	191
154753Y	191
154754Y	191
15501	231
15501C	231
155104	194
155105	194
155106	194
155107	194
155108	194
155204	194
155206	194
155207	194
155208	194
155306	194
155307	194
155308	194
155309	194
155310	194
155311	194
155809	195
155810	195
155905	194
155908	194
155909	194
155910	194
155912	194
15601	210
15601C	210
15602	210
15602C	210
156101Y	179
156102Y	179
156103Y	179
156104Y	179
156106Y	179
156107Y	179
156108Y	179
156150	179
156151Y	179
156152Y	179
156153Y	179
156154Y	179
156201Y	179
156202Y	179
156203Y	179
156204Y	179
156206Y	179
156207Y	179
156208Y	179
156250	179
156251Y	179
156252Y	179
156253Y	179
156254Y	179
156301Y	179
156302Y	179
156303Y	179
156304Y	179
156306Y	179
156307Y	179
156308Y	179
156350	179
156351Y	179
156352Y	179
156353Y	179
156354Y	179
156401Y	179
156402Y	179
156403Y	179
156404Y	179
156406Y	179
156407Y	179
156408Y	179
156450	179
156451Y	179
156452Y	179
156453Y	179
156454Y	179
15699C	210
15701	212
15701C	212
15702	212
15702C	212
157101Y	193
157102Y	193
157103Y	193
157104Y	193
157150	193
157151Y	193
157152Y	193
157153Y	193
157154Y	193
157201Y	193
157202Y	193
157203Y	193
157204Y	193
157250	193
157251Y	193
157252Y	193
157253Y	193
157254Y	193
157301Y	193
157302Y	193
157303Y	193
157304Y	193
157350	193
157351Y	193
157352Y	193
157353Y	193
157354Y	193
157401Y	193
157402Y	193
157403Y	193
157404Y	193
157450	193
157451Y	193
157452Y	193
157453Y	193
157454Y	193
15799C	212
15800	238
15800B	238
15800BC	238
15800C	238
15801	238
15801B	238
15801BC	238
15801C	238
15802	238
15802B	238
15802BC	238
15802C	238
15803	238
15803B	238
15803BC	238
15803C	238
158101YE	182
158106YE	182
158150E	182
158151YE	182
158201YE	182
158202YE	182
158206YE	182
158207YE	182
158250E	182
158251YE	182
158252YE	182
158301Y	182
158302Y	182
158303Y	182
158304Y	182
158306Y	182
158307Y	182
158308Y	182
158350	182
158351Y	182
158352Y	182
158353Y	182
158354Y	182
158401Y	182
158402Y	182
158403Y	182
158404Y	182
158406Y	182
158407Y	182
158408Y	182
158450	182
158451Y	182
158452Y	182
158453Y	182
158454Y	182
15901	236
15901C	236
159896YE	178
159936YE	178
16003	230
16003C	230
160101YE	178
160111YE	178
160201YE	178
160206YE	178
160301Y	178
160302Y	178
160303Y	178
160304Y	178
160306Y	178
160307Y	178
160308Y	178
160704	194
160705	194
160706	194
160707	194
160708	194
160804	194
160806	194
160807	194
160808	194
160906	194
160907	194
160908	194
160909	194
160910	194
160911	194
161005	194
161008	194
161009	194
161010	194
161012	194
16103	230
16103C	230
161101Y	188
161102Y	188
161103Y	188
161104Y	188
161106Y	188
161107Y	188
161108Y	188
161150	189
161151Y	189
161152Y	189
161153Y	189
161154Y	189
161201Y	188
161202Y	188
161203Y	188
161204Y	188
161206Y	188
161207Y	188
161208Y	188
161250	189
161251Y	189
161252Y	189
161253Y	189
161254Y	189
161301Y	188
161302Y	188
161303Y	188
161304Y	188
161306Y	188
161307Y	188
161308Y	188
161350	189
161351Y	189
161352Y	189
161353Y	189
161354Y	189
161401Y	188
161402Y	188
161403Y	188
161404Y	188
161406Y	188
161407Y	188
161408Y	188
161450	189
161451Y	189
161452Y	189
161453Y	189
161454Y	189
162001Y	192
162002Y	192
162003YE	192
162004YE	192
162006Y	192
162007Y	192
162008YE	192
16202	230
16202C	230
16203	230
16203C	230
162050	192
162051Y	192
162052Y	192
162053YE	192
162054YE	192
162101Y	192
162102Y	192
162103Y	192
162104Y	192
162106Y	192
162107Y	192
162108YE	192
162150	192
162151Y	192
162152Y	192
162153Y	192
162154Y	192
162201Y	192
162202Y	192
162203Y	192
162204Y	192
162206Y	192
162207Y	192
162250	192
162251Y	192
162252Y	192
162253Y	192
162254Y	192
162301Y	192
162302Y	192
162303Y	192
162304Y	192
162306Y	192
162307Y	192
162308Y	192
162308Y	192
162350	192
162351Y	192

162352Y	192
162353Y	192
162354Y	192
16303	230
16303C	230
16313	230
16313C	230
16323	230
16323C	230
16324	230
16324C	230
16401	230
16401C	230
16501	230
16501C	230
16651	244
16652	244
16653	244
16654	244
16700B	229
16700B-30	229
16700B-75	229
16801B	228
16802B	228
16901B	228
16902B	228
17001B	228
17002B	228
17100B	229
17200B	229
17300B	229
17401	202
17401C	202
17402	202
17402C	202
17501	201
17502	201
17601	200
17602	200
17701	213
17701B	213
17701BC	213
17701C	213
17702	213
17702-30	213
17702C	213
17801	214
17801B	214
17801BC	214
17801C	214
17802	214
17802C	214
17901	201
17901C	201
17902	201
17902-60	201
17902C	201
18003	216
18003C	216
18103	216
18103C	216
18200BC	239
18204C	239
18210BC	239
18214C	239
18301	244
18301B	244
18301BC	244
18301C	244
18401C	225
18463	225
18600BC	243
18604C	243
18760BC	241
18764C	241
18770BC	241
18774C	241
18780BC	241
18784C	241
18801	226
18801C	226
18900BC	240
18904C	240
18910BC	240
18914C	240
18940BC	240
18944C	240
18960BC	240
18964C	240
18970BC	240
18974C	240
19200B	229
19360BC	241
19364C	241
19976	215
19980	294
19981	294
19982	294
19999	226
20101Y	249
20103Y	249
20111Y	249
20113Y	249
20151Y	249
20153Y	249
20161Y	249
20163Y	249
20201Y	250
20203Y	250
20251Y	250
20253Y	250
20261Y	250
20263Y	250
20301Y	249
20303Y	249
20311Y	249
20313Y	249
20351Y	249
20353Y	249
20361Y	249
20363Y	249
20401Y	250
20403Y	250
20451Y	250
20453Y	250
20461Y	250
20463Y	250
20701	256
20703	256
20704	256
20706	256
20707	256
20709	256
20712	256
20714	256
20801	254
20803	254
20901	254
20903	254
21001	255
21003	255
21101	255
21103	255
21303	256
21501Y	257
21503Y	257
21505Y	257
21506Y	257
21508Y	257
21901Y	248
21903Y	248
21911Y	248
21913Y	248
21951Y	248
21953Y	248
21961Y	248
21963Y	248
22001Y	248
22003Y	248
22011Y	248
22013Y	248
22051Y	248
22053Y	248
22061Y	248
22063Y	248
22101Y	257
22102Y	257
22104Y	257
22201Y	251
22203Y	251
22211Y	251
22213Y	251
22251Y	251
22253Y	251
22261Y	251
22263Y	251
22301Y	251
22303Y	251
22311Y	251
22313Y	251
22351Y	251
22353Y	251
22361Y	251
22363Y	251
22401Y	252
22403Y	252
22411Y	252
22413Y	252
22451Y	252
22453Y	252
22461Y	252
22463Y	252
22501Y	252
22503Y	252
22511Y	252
22513Y	252
22551Y	252
22553Y	252
22561Y	252
22563Y	252
22601Y	253
22603Y	253
22651Y	253
22653Y	253
22661Y	253
22663Y	253
22701Y	253
22703Y	253
22751Y	253
22753Y	253
22761Y	253
22763Y	253
22801	115
22802	115
22803	115
22807	115
22808	115
22809	115
22811	116
22812	116
22813	116
22814	115
22815	115
22816	115
22861	116
22862	116
23001	258
23101	258
23102	258
23103	258
23104	258
23202	255
23204	255
23302	256
23303	256
23304	256
23305	256
23307	256
30101	261
30102	261
30103	261
30104	261
30201	261
30202	261
30203	261
30204	261
30501	262
30502	262
30503	262
30504	262
30601	262
30602	262
30603	262
30604	262
30701	263
30702	263
30703	263
30704	263
30705	263
30706	263
30709	263
30710	263
30801	263
30802	263
30803	263
30804	263
30901	264
30902	264
30903	264
30904	264
31001	264
31002	264
31003	264
31004	264
31101	265
31102	265
31103	265
31104	265
31109	265
31110	265
31201	265
31202	265
31203	265
31204	265
31301	267
31302	267
31311	267
31312	267
31401	267
31402	267
31409	267
31410	267
31411	267
31412	267
31419	267
31420	267
31501	268
31502	268
31601	268
31602	268
31701	269
31702	269
31798	269
31799	269
31801	269
31901	270
32001	270
32002	270

32101	271
32201	271
32301	271
32401	272
32501Y	272
32601	272
32701Y	272
32702Y	272
32703Y	272
32801	273
32802	273
32811	273
32901	273
32902	273
32903	273
32904	273
32911	273
32912	273
32913	273
33011	273
33012	273
33012	273
33013	273
33013	273
33014	273
33021	273
33022	273
33023	273
33024	273
33101	276
33102	276
33103	276
33301	288
33502	281
33504	281
33506	281
33601	274
33702Y	277
33802Y	277
33901Y	277
33902Y	277
33903Y	277
34101	275
34102	275
34103	275
34151	275
34152	275
34153	275
34501	276
34502	276
34503	276
34611	280
34612	280
34711	279
34712	279
34713	279
34714	279
34761	279
34762	279
34763	279
34764	279
34811	279
34812	279
34813	279
34814	279
34861	279
34862	279
34863	279
34864	279
34911	278
34912	278
34913	278
34914	278
35011	278
35012	278
35013	278
35014	278
35111	278
35112	278
35113	278
35114	278
35161	278
35162	278
35163	278
35164	278
35211	278
35212	278
35213	278
35214	278
35261	278
35262	278
35263	278
35264	278
35301	289
35302	289
35303	289
35401	289
35402	289
35403	289
35501	289
35502	289
35503	289
35611	280
35612	280
35613	280
35614	280
35711	280
35712	280
35713	280
35714	280
35721	280
35722	280
35723	280
35724	280
35800Y	288
35802Y	282
35804Y	282
35806Y	282
35900Y	288
35902Y	283
35904Y	283
35906Y	283
36000Y	288
36002Y	284
36004Y	284
36006Y	284
36100Y	288
36102Y	285
36104Y	285
36106Y	285
36251	288
36301	290
36302	290
36303	290
36304	290
36401	282
36421	287
36422	287
36423	287
36501	283
36521	287
36522	287
36523	287
36601	284
36621	286
36622	286
36623	286
36701	285
36721	286
36722	286
36723	286
36801	292
36801SS	292
36802	292
36802SS	292
36803	292
36803SS	292
36901	292
36901SS	292
36902	292
36902SS	292
36903	292
36903SS	292
37001	293
37002	293
37003	293
37101	293
37102	293
37103	293
37201	295
37202	295
37203	295
37301	295
37302	295
37401Y	298
37402Y	298
37501Y	298
37502Y	298
37503Y	298
37504Y	298
37505Y	298
37506Y	298
37507Y	298
37601	302
37602	302
37602Y	302
37603	302
37603Y	302
37611	302
37612	302
37612Y	302
37613	302
37613Y	302
37621	302
37622	302
37622Y	302
37623	302
37623Y	302
37801	299
37802	299
37802Y	299
37803	299
37901	300
37902	300
37902Y	300
37903	300
38001	300
38002	300
38002Y	300
38003	300
38100Y	301
38101	301
38102	301
38103	301
38104	301
38104Y	301
38201	301
38202	301
38202Y	301
38203	301
38301	296
38302	296
38401	296
38402	296
38501	297
38601	297
38602	297
38701	304
38702	304
38703	304
38704	304
38705	304
38706	304
38707	304
38708	304
38709	304
38801	304
38802	304
38901	170
38902	170
39011	273
39101	303
39102	303
39104	303
39201Y	274
39202Y	274
39203Y	274
39302	274
39401	275
39402	275
39501Y	288
39601	291
39602	291
39701	297
39702	297
39703	297
39860	266
39861	266
39870	266
39871	266
40101	306
40101Y	306
40102	306
40102Y	306
40105	306
40105Y	306
40201	306
40201Y	306
40202	306
40202Y	306
40203	306
40203Y	306
40204	306
40204Y	306
40205	306
40205Y	306
40206	306
40206Y	306
40301	307
40301Y	307
40302	307
40302Y	307
40303	307
40303Y	307
40304	307
40304Y	307
40305	307
40305Y	307
40306	307
40306Y	307
40401	307
40401Y	307
40402	307
40402Y	307
40405	307
40405Y	307
40701	308
40702	308
40801	308
40901	309
41001	310
41002	310
41101	310
41102	310
41301	313
41302	313
41303	313
41401	314

41402	314
41501Y	316
41502Y	316
41505Y	316
41523Y	316
41524Y	316
41526Y	316
41535Y	316
41536Y	316
41538Y	316
41550Y	316
41551Y	316
41558Y	316
41559Y	316
41561Y	316
41561Y	317
41562Y	316
41566Y	316
41567Y	316
41569Y	316
41570Y	316
41592Y	316
41601Y	317
41602Y	317
41611Y	317
41653Y	317
41654Y	317
41656Y	317
41657Y	317
41662Y	317
41664Y	317
41665Y	317
41674Y	317
41681Y	317
41682Y	317
41684Y	317
41685Y	317
41686Y	317
41687Y	317
41689Y	317
41690Y	317
41701	313
41702	313
41903Y	315
41904Y	315
41905Y	315
41906Y	315
41913Y	315
41914Y	315
41915Y	315
41916Y	315
42511	312
42521	312
42601	311
42701	312
42702	312
42801Y	318
42802Y	318
42805Y	318
42806Y	318
42807Y	318
42808Y	318
42899Y	318
42901Y	318
42902Y	318
43001Y	318
43002Y	318
50101Y	78
50102Y	78
50103Y	78
50104Y	78
50150	78
50151Y	78
50152Y	78
50153Y	78
50154Y	78
50201Y	78
50202Y	78
50203Y	78
50204Y	78
50250	78
50251Y	78
50252Y	78
50253Y	78
50254Y	78
50301GY	91
50301Y	78
50302GY	91
50302Y	78
50303GY	91
50303Y	78
50304GY	91
50304Y	78
50350	78
50351Y	78
50352Y	78
50353Y	78
50354Y	78
50401GY	91
50401Y	78
50402GY	91
50402Y	78
50403GY	91
50403Y	78
50404GY	91
50404Y	78
50450	78
50451Y	78
50452Y	78
50453Y	78
50454Y	78
50501GY	91
50501Y	78
50502GY	91
50502Y	78
50503GY	91
50503Y	78
50504GY	91
50504Y	78
50550	78
50551Y	78
50552Y	78
50553Y	78
50554Y	78
50601Y	78
50602Y	78
50603Y	78
50604Y	78
50650	78
50651Y	78
50652Y	78
50653Y	78
50654Y	78
50701Y	78
50702Y	78
50703Y	78
50704Y	78
50750	78
50751Y	78
50752Y	78
50753Y	78
50754Y	78
50801Y	79
50802Y	79
50803Y	79
50804Y	79
50851Y	79
50852Y	79
50853Y	79
50854Y	79
50901Y	79
50902Y	79
50903Y	79
50904Y	79
50951Y	79
50952Y	79
50953Y	79
50954Y	79
51001Y	79
51002Y	79
51003Y	79
51004Y	79
51051Y	79
51052Y	79
51053Y	79
51054Y	79
51101Y	80
51102Y	80
51103Y	80
51104Y	80
51150	80
51151Y	80
51152Y	80
51153Y	80
51154Y	80
51201Y	80
51202Y	80
51203Y	80
51204Y	80
51250	80
51251Y	80
51252Y	80
51253Y	80
51254Y	80
51301Y	80
51302Y	80
51303Y	80
51304Y	80
51350	80
51351Y	80
51352Y	80
51353Y	80
51354Y	80
51401Y	80
51402Y	80
51403Y	80
51404Y	80
51450	80
51451Y	80
51452Y	80
51453Y	80
51454Y	80
51501Y	80
51502Y	80
51503Y	80
51504Y	80
51550	80
51551Y	80
51552Y	80
51553Y	80
51554Y	80
51601Y	80
51602Y	80
51603Y	80
51604Y	80
51650	80
51651Y	80
51652Y	80
51653Y	80
51654Y	80
51701Y	80
51702Y	80
51703Y	80
51704Y	80
51750	80
51751Y	80
51752Y	80
51753Y	80
51754Y	80
51801Y	81
51802Y	81
51803Y	81
51804Y	81
51851Y	81
51852Y	81
51853Y	81
51854Y	81
51901Y	81
51902Y	81
51903Y	81
51904Y	81
51951Y	81
51952Y	81
51953Y	81
51954Y	81
52001Y	81
52002Y	81
52003Y	81
52004Y	81
5201 Series	109
5202 Series	111
5203 Series	112
5204 Series	113
52051Y	81
52052Y	81
52053Y	81
52054Y	81
5206 Series	110
52101Y	82
52102Y	82
52103Y	82
52104Y	82
52150	82
52151Y	82
52152Y	82
52153Y	82
52154Y	82
52201Y	82
52202Y	82
52203Y	82
52204Y	82
5221 Series	134/135
5222 Series	137/138
5223 Series	139
52250	82
52251Y	82
52252Y	82
52253Y	82
52254Y	82
5225 Series	140
5226 Series	136
52301GY	92
52301Y	82
52302GY	92
52302Y	82
52303GY	92
52303Y	82
52304GY	92
52304Y	82
5231 Series	142
5233 Series	144
5234 Series	146
52350	82
52351Y	82
52352Y	82
52353Y	82
52354Y	82
5235 Series	145
5236 Series	143
5237 Series	147/148
5238 Series	147/148
52401GY	92
52401Y	82
52402GY	92
52402Y	82
52403GY	92
52403Y	82
52404GY	92

52404Y	82
52450	82
52451Y	82
52452Y	82
52453Y	82
52454Y	82
52501GY	92
52501Y	82
52502GY	92
52502Y	82
52503GY	92
52503Y	82
52504GY	92
52504Y	82
52550	82
52551Y	82
52552Y	82
52553Y	82
52554Y	82
5256 Series	123
52601Y	82
52602Y	82
52603Y	82
52604Y	82
5261 Series	122
5262 Series	124
5263 Series	125
52650	82
52651Y	82
52652Y	82
52653Y	82
52654Y	82
5265 Series	126
52701Y	82
52702Y	82
52703Y	82
52704Y	82
52750	82
52751Y	82
52752Y	82
52753Y	82
52754Y	82
52801Y	83
52802Y	83
52803Y	83
52804Y	83
52850	83
52851Y	83
52852Y	83
52853Y	83
52854Y	83
52901Y	83
52902Y	83
52903Y	83
52904Y	83
52950	83
52951Y	83
52952Y	83
52953Y	83
52954Y	83
53001GY	91
53001Y	83
53002GY	91
53002Y	83
53003GY	91
53003Y	83
53004GY	91
53004Y	83
5301 Series	118/119
53050	83
53051Y	83
53052Y	83
53053Y	83
53054Y	83
5306 Series	120
53101GY	91
53101Y	83
53102GY	91
53102Y	83
53103GY	91
53103Y	83
53104GY	91
53104Y	83
5311 Series	114
53150	83
53151Y	83
53152Y	83
53153Y	83
53154Y	83
53201GY	91
53201Y	83
53202GY	91
53202Y	83
53203GY	91
53203Y	83
53204GY	91
53204Y	83
5321 Series	128
5323 Series	130
5324 Series	132
53250	83
53251Y	83
53252Y	83
53253Y	83
53254Y	83
5325 Series	131
5326 Series	129
53301Y	83
53302Y	83
53303Y	83
53304Y	83
5331 Series	107
53350	83
53351Y	83
53352Y	83
53353Y	83
53354Y	83
53401Y	83
53402Y	83
53403Y	83
53404Y	83
5341 Series	150/151
5342 Series	155/156
5343 Series	153
53450	83
53451Y	83
53452Y	83
53453Y	83
53454Y	83
5345 Series	154
5346 Series	152
53501Y	84
53502Y	84
53503Y	84
53504Y	84
53550	84
53551Y	84
53552Y	84
53553Y	84
53554Y	84
53601Y	84
53602Y	84
53603Y	84
53604Y	84
53650	84
53651Y	84
53652Y	84
53653Y	84
53654Y	84
53701GY	92
53701Y	84
53702GY	92
53702Y	84
53703GY	92
53703Y	84
53704GY	92
53704Y	84
53750	84
53751Y	84
53752Y	84
53753Y	84
53754Y	84
53801GY	92
53801Y	84
53802GY	92
53802Y	84
53803GY	92
53803Y	84
53804GY	92
53804Y	84
53850	84
53851Y	84
53852Y	84
53853Y	84
53854Y	84
53901GY	92
53901Y	84
53902GY	92
53902Y	84
53903GY	92
53903Y	84
53904GY	92
53904Y	84
53950	84
53951Y	84
53952Y	84
53953Y	84
53954Y	84
54001Y	84
54002Y	84
54003Y	84
54004Y	84
54050	84
54051Y	84
54052Y	84
54053Y	84
54054Y	84
54101Y	84
54102Y	84
54103Y	84
54104Y	84
54150	84
54151Y	84
54152Y	84
54153Y	84
54154Y	84
54201Y	85
54202Y	85
54203Y	85
54204Y	85
5421 Series	161
5422 Series	162/163
5423 Series	164
5424 Series	165/166
54251Y	85
54252Y	85
54253Y	85
54254Y	85
54301Y	85
54302Y	85
54303Y	85
54304Y	85
5431 Series	158
5433 Series	159
54351Y	85
54352Y	85
54353Y	85
54354Y	85
54401Y	85
54402Y	85
54403Y	85
54404Y	85
54451Y	85
54452Y	85
54453Y	85
54454Y	85
54501Y	86
54502Y	86
54503Y	86
54504Y	86
54550	86
54551Y	86
54552Y	86
54553Y	86
54554Y	86
54601Y	86
54602Y	86
54603Y	86
54604Y	86
54650	86
54651Y	86
54652Y	86
54653Y	86
54654Y	86
54701Y	86
54702Y	86
54703Y	86
54704Y	86
54750	86
54751Y	86
54752Y	86
54753Y	86
54754Y	86
54801Y	86
54802Y	86
54803Y	86
54804Y	86
54850	86
54851Y	86
54852Y	86
54853Y	86
54854Y	86
54901Y	87
54902Y	87
54903Y	87
54904Y	87
54951Y	87
54952Y	87
54953Y	87
54954Y	87
55001Y	87
55002Y	87
55003Y	87
55004Y	87
55051Y	87
55052Y	87
55053Y	87
55054Y	87
55101Y	88
55102Y	88
55103Y	88
55104Y	88
55150	88
55151Y	88
55152Y	88
55153Y	88
55154Y	88
55201Y	88
55202Y	88
55203Y	88
55204Y	88
55250	88
55251Y	88
55252Y	88
55253Y	88
55254Y	88
55301Y	88
55302Y	88

55303Y	88
55304Y	88
55350	88
55351Y	88
55352Y	88
55353Y	88
55354Y	88
55401Y	88
55402Y	88
55403Y	88
55404Y	88
55450	88
55451Y	88
55452Y	88
55453Y	88
55454Y	88
55501Y	89
55502Y	89
55503Y	89
55504Y	89
55551Y	89
55552Y	89
55553Y	89
55554Y	89
55601Y	89
55602Y	89
55603Y	89
55604Y	89
55651Y	89
55652Y	89
55653Y	89
55654Y	89
55701Y	90
55702Y	90
55703Y	90
55704Y	90
55750	90
55751Y	90
55752Y	90
55753Y	90
55754Y	90
55801Y	90
55802Y	90
55803Y	90
55804Y	90
55850	90
55851Y	90
55852Y	90
55853Y	90
55854Y	90
55901Y	90
55902Y	90
55903Y	90
55904Y	90
55950	90
55951Y	90
55952Y	90
55953Y	90
55954Y	90
56001Y	90
56002Y	90
56003Y	90
56004Y	90
56050	90
56051Y	90
56052Y	90
56053Y	90
56054Y	90
56101Y	90
56102Y	90
56103Y	90
56104Y	90
56150	90
56151Y	90
56152Y	90
56153Y	90
56154Y	90
56201Y	90
56202Y	90
56203Y	90
56204Y	90
56250	90
56251Y	90
56252Y	90
56253Y	90
56254Y	90
56301Y	90
56302Y	90
56303Y	90
56304Y	90
56350	90
56351Y	90
56352Y	90
56353Y	90
56354Y	90
56401Y	90
56402Y	90
56403Y	90
56404Y	90
56450	90
56451Y	90
56452Y	90
56453Y	90
56454Y	90
56550Y	94
56650Y	94
56750Y	94
56850Y	94
57050E	94
57150E	94
57250E	94
57301Y	95
57302Y	95
57303Y	95
57304Y	95
57350	95
57351Y	95
57352Y	95
57353Y	95
57354Y	95
57401Y	95
57402Y	95
57403Y	95
57404Y	95
57450	95
57451Y	95
57452Y	95
57453Y	95
57454Y	95
57501Y	95
57502Y	95
57503Y	95
57504Y	95
57550	95
57551Y	95
57552Y	95
57553Y	95
57554Y	95
58001Y	93
58002Y	93
58003Y	93
58004Y	93
58050	93
58051Y	93
58052Y	93
58053Y	93
58054Y	93
58101Y	93
58102Y	93
58103Y	93
58104Y	93
58150	93
58151Y	93
58152Y	93
58153Y	93
58154Y	93
58201Y	93
58202Y	93
58203Y	93
58204Y	93
58250	93
58251Y	93
58252Y	93
58253Y	93
58254Y	93
58301Y	93
58302Y	93
58303Y	93
58304Y	93
58350	93
58351Y	93
58352Y	93
58353Y	93
58354Y	93
60100	98
60101Y	98
60102Y	98
60103Y	98
60104Y	98
60200	98
60201Y	98
60202Y	98
60203Y	98
60204Y	98
60300	98
60301Y	98
60302Y	98
60303Y	98
60304Y	98
60400	98
60401Y	98
60402Y	98
60403Y	98
60404Y	98
60500	98
60501Y	98
60502Y	98
60503Y	98
60504Y	98
60600	98
60601Y	98
60602Y	98
60603Y	98
60604Y	98
60700	98
60701Y	98
60702Y	98
60703Y	98
60704Y	98
60801Y	98
60802Y	98
60803Y	98
60804Y	98
60901Y	98
60902Y	98
60903Y	98
60904Y	98
61001Y	98
61002Y	98
61003Y	98
61004Y	98
61100	99
61101Y	99
61102Y	99
61103Y	99
61104Y	99
61200	99
61201Y	99
61202Y	99
61203Y	99
61204Y	99
61300	99
61301Y	99
61302Y	99
61303Y	99
61304Y	99
61400	99
61401Y	99
61402Y	99
61403Y	99
61404Y	99
61500	99
61501Y	99
61502Y	99
61503Y	99
61504Y	99
61600	99
61601Y	99
61602Y	99
61603Y	99
61604Y	99
61700	99
61701Y	99
61702Y	99
61703Y	99
61704Y	99
61800	100
61801Y	100
61802Y	100
61803Y	100
61804Y	100
61900	100
61901Y	100
61902Y	100
61903Y	100
61904Y	100
62000	100
62001Y	100
62002Y	100
62003Y	100
62004Y	100
62100	100
62101Y	100
62102Y	100
62103Y	100
62104Y	100
62200	100
62201Y	100
62202Y	100
62203Y	100
62204Y	100
62300	100
62301Y	100
62302Y	100
62303Y	100
62304Y	100
62400	100
62401Y	100
62402Y	100
62403Y	100
62404Y	100
62500	99
62501Y	99
62502Y	99
62503Y	99
62504Y	99
62600	99
62601Y	99
62602Y	99
62603Y	99
62604Y	99
62700	99
62701Y	99
62702Y	99
62703Y	99
62704Y	99
62800	99
62801Y	99

62802Y 99
62803Y 99
62804Y 99
62900 100
62901Y 100
62902Y 100
62903Y 100
62904Y 100
63000 100
63001Y 100
63002Y 100
63003Y 100
63004Y 100
63100 100
63101Y 100
63102Y 100
63103Y 100
63104Y 100
63200 100
63201Y 100
63202Y 100
63203Y 100
63204Y 100
63300 100
63301Y 100
63302Y 100
63303Y 100
63304Y 100
63400 100
63401Y 100
63402Y 100
63403Y 100
63404Y 100
63500 100
63501Y 100
63502Y 100
63503Y 100
63504Y 100
72021610Y 102
72023610Y 102
72123610Y 102
72223610Y 102
72323610Y 102
72423610Y 102
72523610Y 102
72621610Y 102
72623610Y 102
72723610Y 102
72821610Y 102
72823610Y 102
72921610Y 102
72923610Y 102
73721610Y 102
73723610Y 102
74020610Y 102
74021610Y 102
74023610Y 102
74320610Y 102
74321610Y 102
74323610Y 102
77031610Y 103
77033610Y 103
77036610Y 103
77121610Y 103
77123610Y 103
77126610Y 103
77223610Y 103
77226610Y 103
79023010Y 104
79024010Y 104
79026010Y 104
79124010Y 104
79126010Y 104
79127010Y 104
79128010Y 104
79223010Y 104
79224010Y 104
79225010Y 104
79226010Y 104
79321010Y 104
79520010Y 104
80100Q 321
80100SSQ 321
80101Q 321
80101SSQ 321
80102Q 321
80102SSQ 321
80103Q 321
80103SSQ 321
80104Q 321
80104SSQ 321
80110Q 321
80110SSQ 321
80111Q 321
80111SSQ 321
80112Q 321
80112SSQ 321
80113Q 321
80113SSQ 321
80114Q 321
80114SSQ 321
80121Q 321
80121SSQ 321
80122Q 321
80122SSQ 321
80132Q 321
80132SSQ 321
80200Q 321
80201Q 321
80202Q 321
80203Q 321
80204Q 321
80210Q 321
80211Q 321
80212Q 321
80213Q 321
80214Q 321
80221Q 321
80222Q 321
80232Q 321
80300LQ 324
80300Q 324
80300SSQ 324
80301LQ 324
80301Q 324
80301SSQ 324
80302LQ 324
80302Q 324
80302SSQ 324
80303LQ 324
80303Q 324
80303SSQ 324
80304LQ 324
80304Q 324
80304SSQ 324
80310LQ 324
80310Q 324
80310SSQ 324
80311LQ 324
80311Q 324
80311SSQ 324
80312LQ 324
80312Q 324
80312SSQ 324
80313LQ 324
80313Q 324
80313SSQ 324
80314LQ 324
80314Q 324
80314SSQ 324
80321LQ 324
80321Q 324
80321SSQ 324
80322LQ 324
80322Q 324
80322SSQ 324
80332LQ 324
80332Q 324
80332SSQ 324
80400LQ 324
80400Q 324
80400SSQ 324
80401LQ 324
80401Q 324
80401SSQ 324
80402LQ 324
80402Q 324
80402SSQ 324
80403LQ 324
80403Q 324
80403SSQ 324
80404LQ 324
80404Q 324
80404SSQ 324
80410LQ 324
80410Q 324
80410SSQ 324
80411LQ 324
80411Q 324
80411SSQ 324
80412LQ 324
80412Q 324
80412SSQ 324
80413LQ 324
80413Q 324
80413SSQ 324
80414LQ 324
80414Q 324
80414SSQ 324
80421LQ 324
80421Q 324
80421SSQ 324
80422LQ 324
80422Q 324
80422SSQ 324
80432LQ 324
80432Q 324
80432SSQ 324
80500Q 324
80501Q 324
80502Q 324
80503Q 324
80504Q 324
80510Q 324
80511Q 324
80512Q 324
80513Q 324
80514Q 324
80521Q 324
80522Q 324
80532Q 324
80600Q 324
80601Q 324
80602Q 324
80603Q 324
80604Q 324
80610Q 324
80611Q 324
80612Q 324
80613Q 324
80614Q 324
80621Q 324
80622Q 324
80632Q 324
80701Q 327
80701SSQ 327
80702Q 327
80702SSQ 327
80703Q 327
80703SSQ 327
80704Q 327
80704SSQ 327
80713Q 327
80713SSQ 327
80714Q 327
80714SSQ 327
80801Q 327
80802Q 327
80803Q 327
80804Q 327
80813Q 327
80814Q 327
80901LQ 330
80901Q 330
80901SSQ 330
80902LQ 330
80902Q 330
80902SSQ 330
80903LQ 330
80903Q 330
80903SSQ 330
80904LQ 330
80904Q 330
80904SSQ 330
80913LQ 330
80913Q 330
80913SSQ 330
80914LQ 330
80914Q 330
80914SSQ 330
81001LQ 330
81001Q 330
81001SSQ 330
81002LQ 330
81002Q 330
81002SSQ 330
81003LQ 330
81003Q 330
81003SSQ 330
81004LQ 330
81004Q 330
81004SSQ 330
81013LQ 330
81013Q 330
81013SSQ 330
81014LQ 330
81014Q 330
81014SSQ 330
81101Q 330
81102Q 330
81103Q 330
81104Q 330
81113Q 330
81114Q 330
81201Q 330
81202Q 330
81203Q 330
81204Q 330
81213Q 330
81214Q 330
81300Q 341
81301Q 341
81302Q 341
81303Q 341
81304Q 341
81400Q 341
81401Q 341
81402Q 341
81403Q 341
81404Q 341
81500Q 341
81501Q 341
81502Q 341
81503Q 341
81504Q 341
81600Q 341
81601Q 341
81602Q 341

81603Q	341
81604Q	341
82201Q	322
82201SSQ	322
82203Q	322
82203SSQ	322
82204Q	322
82204SSQ	322
82205Q	322
82205SSQ	322
82210Q	322
82210SSQ	322
82211Q	322
82211SSQ	322
82212Q	322
82212SSQ	322
82213Q	322
82213SSQ	322
82222Q	322
82222SSQ	322
82301Q	322
82303Q	322
82304Q	322
82305Q	322
82310Q	322
82311Q	322
82312Q	322
82313Q	322
82322Q	322
82401LQ	325
82401Q	325
82401SSQ	325
82403LQ	325
82403Q	325
82403SSQ	325
82404HQ	337
82404LHQ	337
82404 LQ	325
82404Q	325
82404SSQ	325
82405LQ	325
82405Q	325
82405SSQ	325
82410LQ	325
82410Q	325
82410SSQ	325
82411LQ	325
82411Q	325
82411SSQ	325
82412HQ	337
82412LHQ	337
82412LQ	325
82412Q	325
82412SSQ	325
82413LQ	325
82413Q	325
82413SSQ	325
82422LQ	325
82422Q	325
82422SSQ	325
82501LQ	325
82501Q	325
82501SSQ	325
82503LQ	325
82503Q	325
82503SSQ	325
82504HQ	337
82504LHQ	337
82504LQ	325
82504Q	325
82504SSQ	325
82505LQ	325
82505Q	325
82505SSQ	325
82510LQ	325
82510Q	325
82510SSQ	325
82511LQ	325
82511Q	325
82511SSQ	325
82512HQ	337
82512LHQ	337
82512LQ	325
82512Q	325
82512SSQ	325
82513LQ	325
82513Q	325
82513SSQ	325
82522LQ	325
82522Q	325
82522SSQ	325
82601Q	325
82603Q	325
82604HQ	337
82604Q	325
82605Q	325
82610Q	325
82611Q	325
82612HQ	337
82612Q	325
82613Q	325
82622Q	325
82701Q	325
82703Q	325
82704HQ	337
82704Q	325
82705Q	325
82710Q	325
82711Q	325
82712HQ	337
82712Q	325
82713Q	325
82722Q	325
82801Q	328
82801SSQ	328
82802Q	328
82802SSQ	328
82804Q	328
82804SSQ	328
82813Q	328
82813SSQ	328
82901Q	328
82902Q	328
82904Q	328
82913Q	328
83001LQ	331
83001Q	331
83001SSQ	331
83002HQ	337
83002LHQ	337
83002LQ	331
83002Q	331
83002SSQ	331
83004HQ	337
83004LHQ	337
83004LQ	331
83004Q	331
83004SSQ	331
83013LQ	331
83013Q	331
83013SSQ	331
83101LQ	331
83101Q	331
83101SSQ	331
83102HQ	337
83102LHQ	337
83102LQ	331
83102Q	331
83102SSQ	331
83104HQ	337
83104LHQ	337
83104LQ	331
83104Q	331
83104SSQ	331
83113LQ	331
83113Q	331
83113SSQ	331
83201Q	331
83202HQ	337
83202Q	331
83204HQ	337
83204Q	331
83213Q	331
83301Q	331
83302HQ	337
83302Q	331
83304HQ	337
83304Q	331
83313Q	331
83400Q	333
83400SSQ	333
83401Q	333
83401SSQ	333
83402Q	333
83402SSQ	333
83500Q	333
83501Q	333
83502Q	333
83600LQ	335
83600Q	335
83600SSQ	335
83601LQ	335
83601Q	335
83601SSQ	335
83602LQ	335
83602Q	335
83602SSQ	335
83700LQ	335
83700Q	335
83700SSQ	335
83701LQ	335
83701Q	335
83701SSQ	335
83702LQ	335
83702Q	335
83702SSQ	335
83800Q	335
83801Q	335
83802Q	335
83900Q	335
83901Q	335
83902Q	335
84504LQ	339
84504Q	339
84504SSQ	339
84604LQ	339
84604Q	339
84604SSQ	339
84704Q	339
84804Q	339
84904LQ	339
84904Q	339
84904SSQ	339
85004LQ	339
85004Q	339
85004SSQ	339
85104Q	339
85204Q	339
89001	321-322-327-328-333
89002	321-322-327-328-333
89003	321-322-327-328
89004	321-322
89005	321
89007	322
89801	341
89802	341
89803	341
89804	341
89805	341
90102Y	345
90102ZY	345
90202Y	345
90202ZY	345
90203Y	345
90203ZY	345
90302HY	345
90302Y	345
90302ZHY	345
90302ZY	345
90303HY	345
90303Y	345
90303ZHY	345
90303ZY	345
90402Y	345
90402ZY	345
90502Y	345
90502ZY	345
90503Y	345
90503ZY	345
90602HY	345
90602Y	345
90602ZHY	345
90602ZY	345
90603HY	345
90603Y	345
90603ZHY	345
90603ZY	345
90702Y	345
90702ZY	345
90703Y	345
90703ZY	345
90801HY	345
90801Y	345
90801ZHY	345
90801ZY	345
90802HY	345
90802Y	345
90802ZHY	345
90802ZY	345
90803HY	345
90803Y	345
90803ZHY	345
90803ZY	345
90902HY	345
90902Y	345
90902ZHY	345
90902ZY	345
90903HY	345
90903Y	345
90903ZHY	345
90903ZY	345
91002Y	349
91002ZY	349
91003Y	349
91003ZY	349
91101Y	349
91101ZY	349
91102Y	349
91102ZY	349
91103Y	349
91103ZY	349
91202HY	349
91202Y	349
91202ZHY	349
91202ZY	349
91203HY	349
91203Y	349
91203ZHY	349
91203ZY	349
91301Y	349
91301ZY	349
91302Y	349
91302ZY	349
91303Y	349
91303ZY	349
91402HY	349
91402Y	349
91402ZHY	349

91402ZY	349
91403HY	349
91403Y	349
91403ZHY	349
91403ZY	349
91502Y	349
91502ZY	349
91503Y	349
91503ZY	349
91601Y	349
91601ZY	349
91602Y	349
91602ZY	349
91603Y	349
91603ZY	349
91702HY	349
91702Y	349
91702ZHY	349
91702ZY	349
91703HY	349
91703Y	349
91703ZHY	349
91703ZY	349
91802Y	349
91802ZY	349
91803Y	349
91803ZY	349
91902Y	357
91903Y	357
92002Y	357
92003Y	357
92103Y	357
92202Y	357
92203Y	357
92302Y	357
92303Y	357
92403Y	357
92502Y	358
92503Y	358
92602Y	358
92603Y	358
92703Y	358
92704Y	358
92802Y	358
92803Y	358
92903Y	358
92904Y	358
93102Y	355
93102ZY	355
93103Y	355
93103ZY	355
93152Y	355
93152ZY	355
93153Y	355
93153ZY	355
93202Y	355
93202ZY	355
93203Y	355
93203ZY	355
93252Y	355
93252ZY	355
93253Y	355
93253ZY	355
93302Y	355
93302ZY	355
93303Y	355
93303ZY	355
93352Y	355
93352ZY	355
93353Y	355
93353ZY	355
93402Y	361
93403Y	361
93502Y	361
93503Y	361
93603Y	361
93702Y	361
93703Y	361
93802Y	361
93803Y	361
93903Y	361
94301HY	351
94301ZHY	351
94302HY	351
94302ZHY	351
94303HY	351
94303ZHY	351
94351HY	351
94351ZHY	351
94352HY	351
94352ZHY	351
94353HY	351
94353ZHY	351
94401HY	351
94401ZHY	351
94402HY	351
94402ZHY	351
94403HY	351
94403ZHY	351
94451HY	351
94451ZHY	351
94452HY	351
94452ZHY	351
94453HY	351
94453ZHY	351
94501HY	351
94501ZHY	351
94502HY	351
94502ZHY	351
94503HY	351
94503ZHY	351
94551HY	351
94551ZHY	351
94552HY	351
94552ZHY	351
94553HY	351
94553ZHY	351
94801HY	353
94801ZHY	353
94802HY	353
94802ZHY	353
94803HY	353
94803ZHY	353
94851HY	353
948 51ZHY	353
94852HY	353
948 52ZHY	353
94853HY	353
948 53ZHY	353
94901HY	353
94901ZHY	353
94902HY	353
94902ZHY	353
94903HY	353
94903ZHY	353
94951HY	353
94951ZHY	353
94952HY	353
94952ZHY	353
94953HY	353
94953ZHY	353
95001HY	353
95001ZHY	353
95002HY	353
95002ZHY	353
95003HY	353
95003ZHY	353
95051HY	353
95051ZHY	353
95052HY	353
95052ZHY	353
95053HY	353
95053ZHY	353
95302Y	347
95302ZY	347
95303Y	347
95303ZY	347
95401HY	347
95401Y	347
95401ZHY	347
95401ZY	347
95402HY	347
95402Y	347
95402ZHY	347
95402ZY	347
95403HY	347
95403Y	347
95403ZHY	347
95403ZY	347
95502HY	347
95502Y	347
95502ZHY	347
95502ZY	347
95503HY	347
95503Y	347
95503ZHY	347
95503ZY	347
95601HY	347
95601Y	347
95601ZHY	347
95601ZY	347
95602HY	347
95602Y	347
95602ZHY	347
95602ZY	347
95603HY	347
95603Y	347
95603ZHY	347
95603ZY	347
95702HY	347
95702Y	347
95702ZHY	347
95702ZY	347
95703HY	347
95703Y	347
95703ZHY	347
95703ZY	347
96001HY	363
96001ZHY	363
96002HY	363
96002ZHY	363
96101HY	363
96101ZHY	363
96102HY	363
96102ZHY	363
96201HY	363
96201ZHY	363
96202HY	363
96202ZHY	363
96301HY	363
96301ZHY	363
96302HY	363
96302ZHY	363
96401HY	363
96401ZHY	363
96402HY	363
96402ZHY	363
96501HY	363
96501ZHY	363
96502HY	363
96502ZHY	363
96601HY	363
96601 ZHY	363
96602HY	363
96602 ZHY	363
96701HY	363
96701ZHY	363
96702HY	363
96702ZHY	363
96801HY	363
96801ZHY	363
96802HY	363
96802ZHY	363
96901HY	363
96901ZHY	363
96902HY	363
96902ZHY	363
97001HY	363
97001ZHY	363
97002HY	363
97002ZHY	363
97101HY	363
97101ZHY	363
97102HY	363
97102ZHY	363
97202Y	357
97203Y	357
97302Y	357
97303Y	357
97403Y	357
97502Y	358
97503Y	358
97602Y	358
97603Y	358
97703Y	358
97704Y	358
97802Y	359
97803Y	359
97903Y	359
97904Y	359
98003Y	359
98004Y	359
98005Y	359
98102HY	355
98102ZHY	355
98103HY	355
98103ZHY	355
98152HY	355
98152ZHY	355
98153HY	355
98153ZHY	355
98202HY	355
98202ZHY	355
98203HY	355
98203ZHY	355
98252HY	355
98252ZHY	355
98253HY	355
98253ZHY	355
98302HY	355
98302ZHY	355
98303HY	355
98303ZHY	355
98352HY	355
98352ZHY	355
98353HY	355
98353ZHY	355
99601	344
99602	344
99603	344
99604	346-348
99605	346-348
99606	348
99607	350
99608	352-354
99801Y	344
99802Y	344-346-348-356-361
99804Y	344-346-348-350-352 356-361-362
99805Y	344-346-348-350-352 354-356-361-362
99806Y	348-350-352 354-356-361-362
99807Y	362